DRAWING LIST FOR TEST PACKAGE

NaOCL-592

PROJECT NO.: 22328D

PROJECT TITLE : M15X Ph2 Project

No	PKG No	UNIT	LINE NUMBER			P&ID		REMARK
			ISO DRAWING No	SHEET	REV	P&ID No	REV	
1	592	4FA	OD32-NaOCl-PV3-N-7013-01	1 OF 1	0	CJ-M15W14-PR-A20-000315		
2	592	4FA	OD32-NaOCl-PV3-N-7014-01	1 OF 1	0	CJ-M15W14-PR-A20-000315		
3	592	4FA	OD32-NaOCl-PV3-N-7015-01	1 OF 2	0	CJ-M15W14-PR-A20-000315		
4	592	4FA	OD32-NaOCl-PV3-N-7015-02	2 OF 2	0	CJ-M15W14-PR-A20-000301		
5	592	5FA	OD32-NaOCl-PV3-N-7015-01	1 OF 1	0	CJ-M15W14-PR-A20-000301	E >N 변경	
6	592	RFA	OD32-NaOCl-PV3-E-7015-01	1 OF 1	1	CJ-M15W14-PR-A20-000301	N >E 변경	
7	592	4FA	OD32-NaOCl-PV3-N-7027-01	1 OF 2	0	CJ-M15W14-PR-A20-000315		

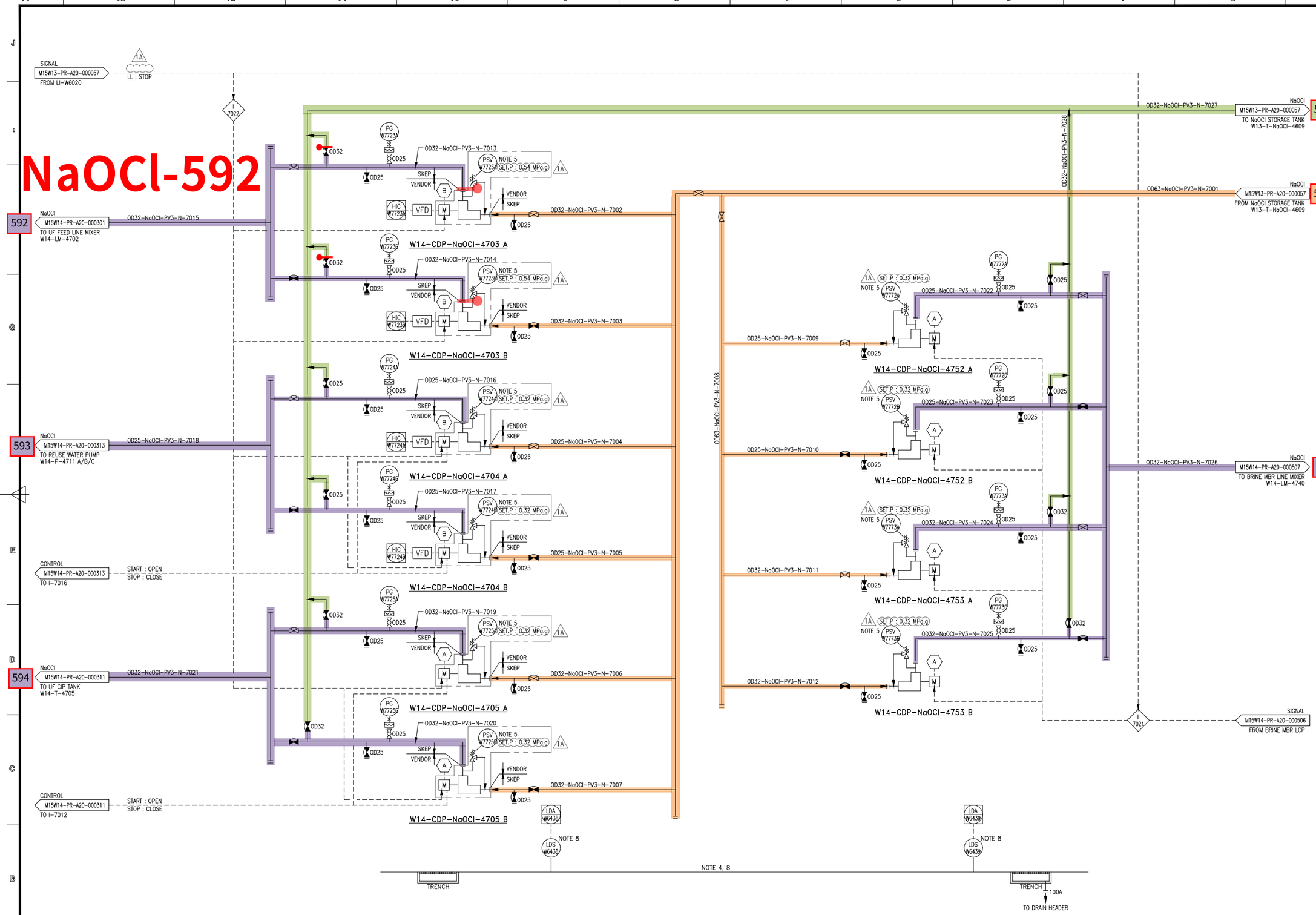

ITEM NO.	W14-CDP-NaOCl-4703 A/B
SERVICE	UF FEED WATER LINE MIXER NaOCl FEED PUMP
Q'TY	1 + 1
TYPE	DIAPHRAGM
CAPA. l/min.ea x MPa	(MAX 11.2 x MAX 0.7 NOTE 9)
MAT'L	PVDF/PTFE(+EPDM)/CERAMIC
POWER kW	0.75

ITEM NO.	W14-CDP-NaOCl-4704 A/B
SERVICE	RO TREATED WATER NaOCl FEED PUMP
Q'TY	1 + 1
TYPE	DIAPHRAGM
CAPA. l/min.ea x MPa	(MAX 4.1 x MAX 0.8 NOTE 10)
MAT'L	PVDF/PTFE(+EPDM)/CERAMIC
POWER kW	0.4

ITEM NO.	W14-CDP-NaOCl-4705 A/B
SERVICE	UF CIP TANK NaOCl FEED PUMP
Q'TY	1 + 1
TYPE	DIAPHRAGM
CAPA. l/min.ea x MPa	(MAX 11.2 x MAX 0.7 NOTE 11)
MAT'L	PVDF/PTFE(+EPDM)/CERAMIC
POWER kW	0.75

ITEM NO.	W14-CDP-NaOCl-4752 A/B
SERVICE	BRINE MBR LINE MIXER NaOCl FEED PUMP (MC)
Q'TY	1 + 1
TYPE	DIAPHRAGM
CAPA. l/min.ea x MPa	(MAX 1.04 x MAX 1 NOTE 12)
MAT'L	PVDF/PTFE/CERAMIC
POWER kW	0.55

ITEM NO.	W14-CDP-NaOCl-4753 A/B
SERVICE	BRINE MBR LINE MIXER NaOCl FEED PUMP (RC)
Q'TY	1 + 1
TYPE	DIAPHRAGM
CAPA. l/min.ea x MPa	(MAX 11.2 x MAX 0.7 NOTE 13)
MAT'L	PVDF/PTFE/CERAMIC
POWER kW	0.75

대외비

KEY PLAN (4F)

NOTE

1. 운전 시 CLOSE 되는 배관에는 LOTO 설치.
2. DIAPHRAGM PUMP MAT'L 표기 : HEAD / DIAPHRAGM / CHECK BALL 약품종류에 따라 LINE 색상을 구분하여야 한다.
4. CHEMICAL ROOM 내 TRENCH & PIT DRAIN은 DRAIN HEADER를 통하여 근처의 인접한 수조로 유입된다.
5. PUMP VENDOR 공급.
6. INTERLOCK NO. I-7021 (W14-CDP-NaOCl-4752 A/B, W14-CDP-NaOCl-4753 A/B AUTO STOP) : REMOTE STATUS에서 W13-T-NaOCl-4609 LEVEL (LI-W6020) LOW LOW STOP. BRINE MBR CIP/BACK WASH 시 START/STOP.
7. INTERLOCK NO. I-7022 (W14-CDP-NaOCl-4703 A/B, W14-CDP-NaOCl-4704 A/B, W14-CDP-NaOCl-4705 A/B AUTO STOP) : REMOTE STATUS에서 W13-T-NaOCl-4609 LEVEL (LI-W6020) LOW LOW STOP.
8. REUSE SYSTEM 및 BRINE 처리 SYSTEM의 공급용 PUMP 주변의 LEAK DETECTOR는 기 공급됨. (LDS-W6438/W6439)
9. OPERATING CAPACITY : 5 LPM OPERATING PRESSURE : 0.49 MPa
10. OPERATING CAPACITY : 3 LPM OPERATING PRESSURE : 0.29 MPa
11. OPERATING CAPACITY : 8 LPM OPERATING PRESSURE : 0.29 MPa
12. OPERATING CAPACITY : 1 LPM OPERATING PRESSURE : 0.29 MPa
13. OPERATING CAPACITY : 10 LPM OPERATING PRESSURE : 0.29 MPa

REV.	DESCRIPTION	DATE
1A	REVISED AFC	25.08.14
1	REVISED AFC	25.01.17
0	APPROVAL FOR CONSTRUCTION	24.10.31

제 도 DRAWN BY	이 인 학
검 토 CHECKED BY	한 진 희
승 인 APPROVED BY	박 동 영
제 작 사	SK 에코플랜트
공 사 명 PROJECT TITLE	M15X Ph4 WWT Project
도면명 DWG. TITLE	PIPING & INSTRUMENT DIAGRAM NaOCl FEED PUMP
축 척 SCALE	NONE
날 짜 DATE	2025. 08. 14
PROJECT NO.	22330D
도면번호 SHEET NO.	CJ-M15W14-PR-A20-000315
REV.	1A

C:WUsersWTOPWDesktopWP&ID251013W[M15X Ph-4 for 인허가]CAD FILE_0910WCJ-M15W14-PR-A20-000315 R1 P&ID FOR NaOC

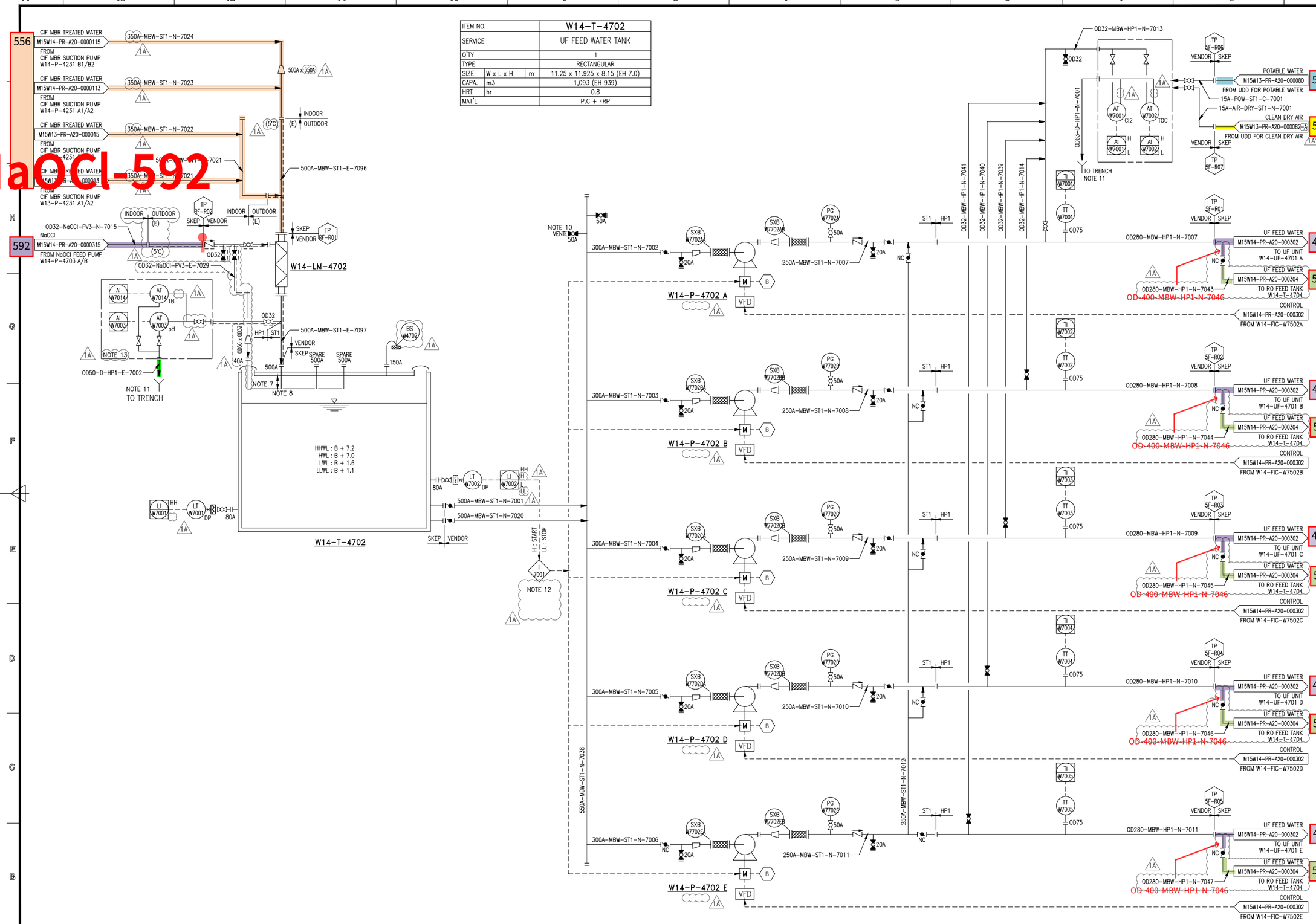

ITEM NO.		W14-T-4702
SERVICE		UF FEED WATER TANK
Q'TY		1
TYPE		RECTANGULAR
SIZE	W x L x H m	11.25 x 11.925 x 8.15 (EH 7.0)
CAPA.	m3	1,093 (EH 939)
HRT	hr	0.8
MAT'L		P.C + FRP

ITEM NO.	W14-LM-4702
SERVICE	UF FEED LINE MIXER
Q'TY	1
CAPA. m3/hr	1224
MAT'L	C.S+ETFE

ITEM NO.	W14-P-4702 A/B/C/D/E
SERVICE	UF FEED WATER PUMP
Q'TY	4 + 1
TYPE	CENTRIFUGAL (VVF)
CAPA. m3/hr.ea x mH	350 x 15 (0.15MPa)
MAT'L	SSC13/SSC13
POWER kW	30

대외비

KEY PLAN (5F)

NOTE

1. TANK와 HWL 이하로 연결되는 모든 배관은 BLOCK VALVE 설치할 것.
2. 원수 인입지점은 펌프 흡입측에서 최대한 이격하여 설치.
3. 2m 이상 높은 곳에 설치된 밸브는 CHAIN VALVE 또는 PLATFORM 구성할 것.
4. MANHOLE : 2개 이상 설치한다. MANHOLE COVER : FRP
5. 운전시 CLOSE 되는 배관에는 LOTO 설치.
6. CENTRIFUGAL PUMP MAT'L 표기 : CASING / IMPELLER
TANK 내 유입, 육안 확인이 가능하고, 비산되지 않도록 최소 깊이로 반영할 것. (SLAB로 부터 100 mm 띄어질 것)
8. 내부 FRP LINING TANK의 SLEEVE는 SUS304 + FRP LINING 적용.
9. LI-7001 : (W14-P-4702 A/B/C/D/E AUTO STOP) : REMOTE STATUS에서 W14-T-4702 LEVEL (LI-W7002) LOW LOW STOP 또는 UF 운전 SEQUENCE에 따라 운전됨.
10. 초기 가동시에 PUMP SUCTION HEADER의 AIR 제거용 VALVE.
11. TRENCH 간략화 고려하여 TRENCH IN PIPE로 배수.
12. UF/RO는 PLC에 의해서 운전되며, 별도의 LCP는 공급되지않음.
13. 옥상층 AT 판넬은 개별이 아닌 일체형으로 공급됨.

REV.	설 명 DESCRIPTION	날 짜 DATE
A	REVISED AFC	25.08.14
1	REVISED AFC	25.01.17
0	APPROVAL FOR CONSTRUCTION	24.10.31

제 도 DRAWN BY	이 인 학
검 토 CHECKED BY	한 진 희
승 인 APPROVED BY	박 동 영
제 작 사	SK 에코플랜트
사 명 PROJECT TITLE	M15X Ph4 WWT Project
도면명 DWG. TITLE	PIPING & INSTRUMENT DIAGRAM UF FEED WATER TANK & PUMP
축 척 SCALE	NONE
날 짜 DATE	2025. 08. 14
PROJECT NO.	22330D
도면번호 SHEET NO.	CJ-M15W14-PR-A20-000301
REV.	1A

A1(594x841mm ±2mm)

C:WUsersWTOPWDesktopWP&ID251013W[M15X Ph-4 for 인허가]CAD FILE_0910WCJ-M15W14-PR-A20-000301 R1 P&ID FOR UF FE

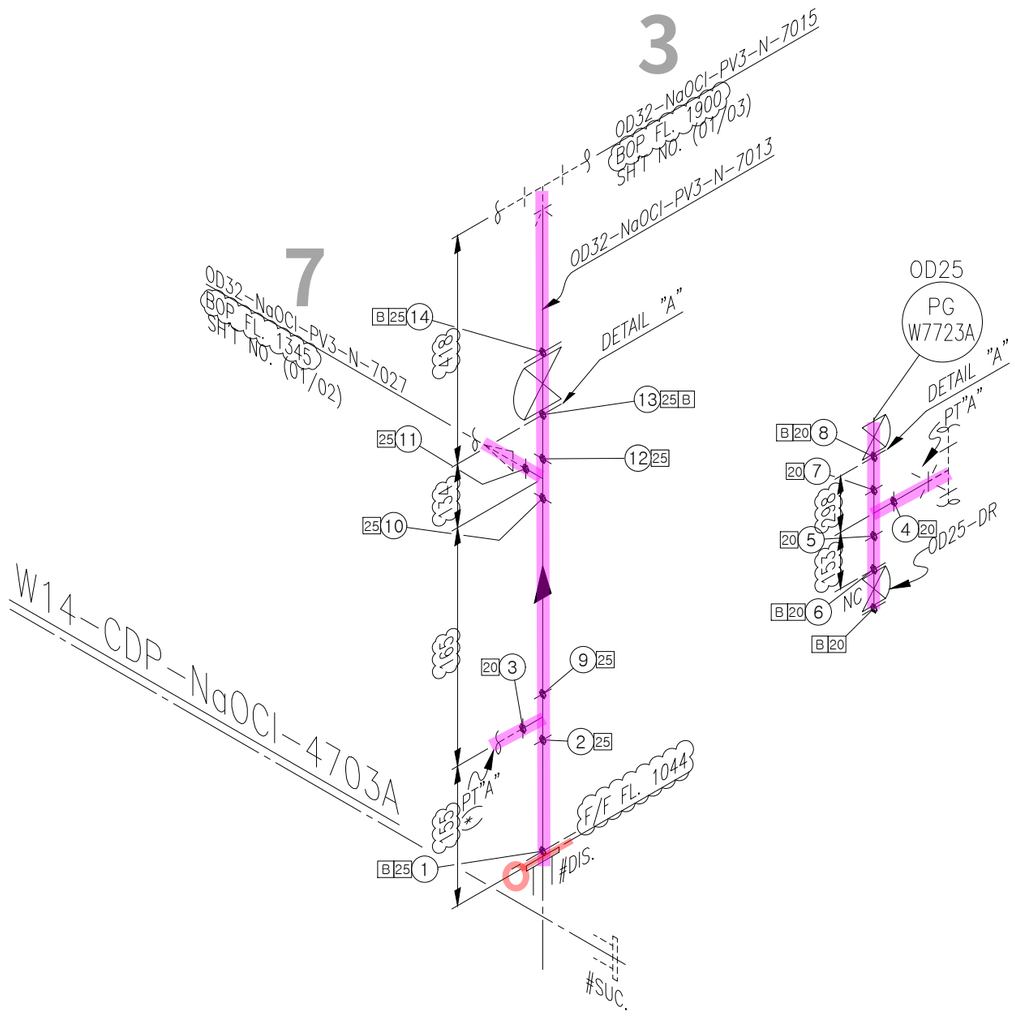

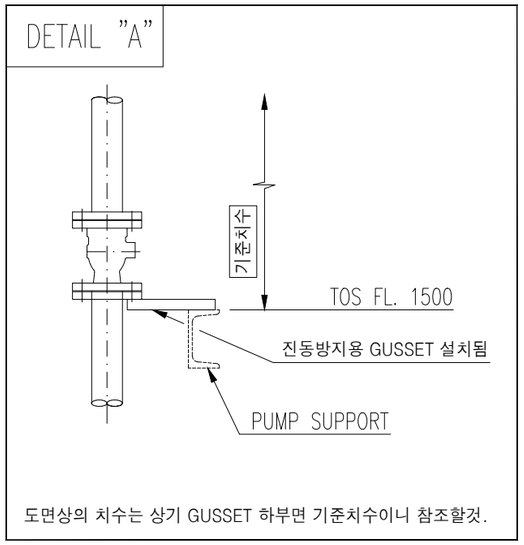

<NOTE>
1. TRAY & ANGLE,CHANNEL SUPPORT가 적용되는 배관 ELEVATION은 현장 맞춤으로 한다.
2. (*) FIELD ADJUST

ITEM	SIZE	Q'TY	DESCRIPTION
		PV3	
P	OD32	1.0M	PIPE, CPVC, PE, SOCKET FUSION, SDR13.5
P	OD25	0.3M	PIPE, CPVC, PE, SOCKET FUSION, SDR13.5
T	OD32	1EA	TEE EQUAL, CPVC, PE, SOCKET FUSION, SDR13.5
T	OD25	1EA	TEE EQUAL, CPVC, PE, SOCKET FUSION, SDR13.5
TR	OD32xOD25	1EA	TEE RED, CPVC, PE, SOCKET FUSION, SDR13.5
F	OD32	3EA	FLG, KS 10K, FF, STUB FLG CPVC /
			BACKING RING(PP)+INSERT(STEEL), SDR13.5
F	OD25	2EA	FLG, KS 10K, FF, STUB FLG CPVC /
			BACKING RING(PP)+INSERT(STEEL), SDR13.5
FB	OD25	1EA	FLG BLIND, KS 10K, FF, CPVC, SDR13.5
G	OD32	3EA	GASKET, KS 10K, FF, PTFE+EPDM, 3.0MM TH'K
G	OD25	3EA	GASKET, KS 10K, FF, PTFE+EPDM, 3.0MM TH'K
B	OD32	3EA	MACHINE BOLT & NYLON NUT :STS 304 / W WASHERS
B	OD25	3SET	MACHINE BOLT & NYLON NUT :STS 304 / W WASHERS
VD	OD32	1EA	DIAPHRAGM VALVE, KS 10K, FF FLG'D, BODY-CPVC /
			TRIM-PDDM, BB, HW
VD	OD25	2EA	DIAPHRAGM VALVE, KS 10K, FF FLG'D, BODY-CPVC /
			TRIM-PDDM, BB, HW
SH	OD32	3EA	SHIELD
SH	OD25	3EA	SHIELD
LOTO	OD25	1EA	LOTO
PG	OD25	1EA	PRESSURE GAUGE, KS 10K, FF

* PIPE : P/P1 * 90° ELBOW : E90 * 45° ELBOW : E45 * TEE : T * RED.TEE : TR * STUB-IN : STU * REINFORCING PAD : RP * CON.RED : RC * ECC.RED : RE * CON.SWAGE : RCS/RCS1 * ECC.SWAGE : RES/RES1 * NIPPLE : NP/NP1/NP2 * CAP : CAP/CAP1 * PLUG : PLG * FULL COUPLING : FC * HALF COUPLING : HF/HF1
* STUB-IN : STU * SOCKET(HDPE/PVC) : SC * SADDLE(HDPE) : SD * FLANGE : F/F1 * GASKET : G/G1/G2 * BOLT & NUT : B/B1 * BLIND FLANGE : FB/FB1 * GATE VA. : VG/VG1/VG2 * BALL VA. : VB/VBLO/VB1/VB1LO/VB2/VB2LO * BUTTERFLY VA. : VF/VF4 * CHECK VA. : VC/VC1/VC2/VC3/VC4/VC5/VC6/VC7
* GLOBE VA. : VL/VL1/VL2 * DIAPHRAGM VA. : VD/VDLO * DAMPER : VP * QUICK COUPLING : SQC * FLEXIBLE JOINT(STEEL) : FLXB * FLEXIBLE JOINT(RUBBER) : FLXR * FLEXIBLE JOINT(STEEL_PTFE LINED) : FLXL * FLEXIBLE HOSE : FLXH * STEAM TRAP : ST * SPRAY NOZZLE : SPN * EMERGENCY SHOWER : SSH
* STRAINER(Y-TYPE) : YSTR * STRAINER(T-TYPE) : TSTR * STRAINER(BUCKET-TYPE) : BSTR * ANCHOR PLATE : STOP * BIRD SCREEN : BS * ISOLATION KIT : IK * UNLOADING BOX : UB * AIR TRAP : AT * LOTO : LOTO * SIGHT GLASS : SG * PRESSURE GAUGE : PG * SHILED : SH * SPECIAL BOLT & NUT : BL/BL1

CLIENT SK hynix 1

INSULATION	CODE	N	CONDITION	PRESS. (kg/cm2g)	TEMP. (°C)
	THICK.	–	DESIGN	3.3	60
			OPERATING	3.0	AMB

AREA W14
UNIT 4FA
REF. PLAN DWG. CJ-M15W14-PI-A30-040010-A
REF. P & ID CJ-M15W14-PR-A20-000315

REV. NO.	DATE	DESCRIPTION	BY	CHK	APP'D
0	25.01.24	APPROVED FOR CONSTRUCTION	황래종	안남후	박동영

CONTRACTOR SK ecoplant
PROJECT NAME M15X Ph4 Project
COMMODITY NaOCl
JOB NO. 22330D
LINE NO. OD32-NaOCl-PV3-N-7013
SH'T NO. 01 / 01
REV. 0

경고 : 본 도면은 SK HYNIX의 기업비밀 자료로서, 어떠한 경우에도 목적 외 사용, 복제, 제3자에게 공개, 누설 및 유출할 수 없으며, 회사는 유포자의 불법 사용으로 피해가 발생할 경우 유포자에게 민/형사상 책임을 요구할 수 있음.

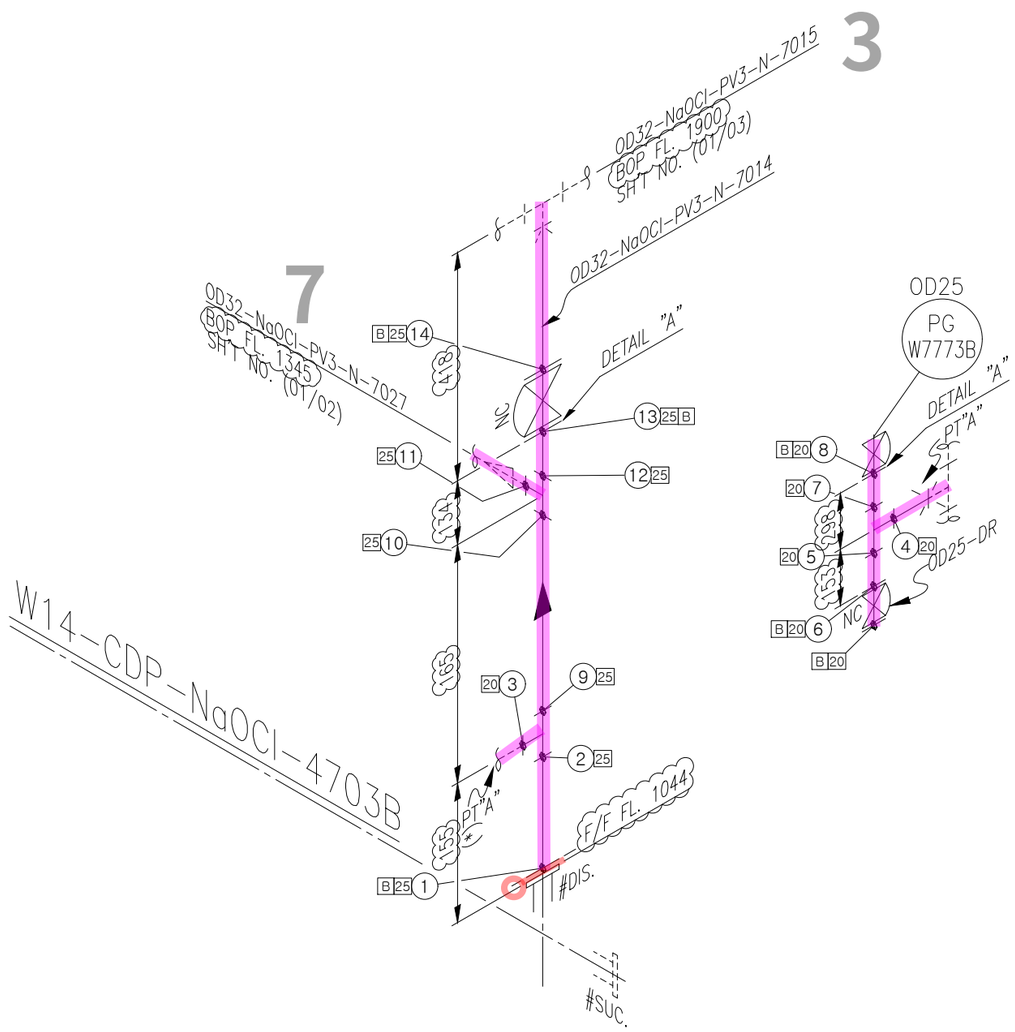

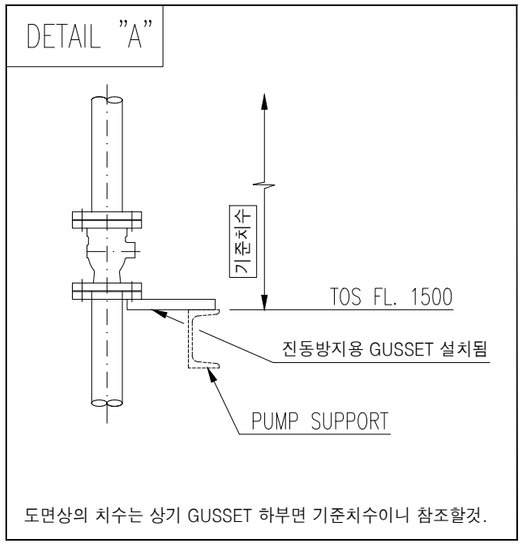

<NOTE>
1. TRAY & ANGLE,CHANNEL SUPPORT가 적용되는 배관 ELEVATION은 현장 맞춤으로 한다.
2. (*) FIELD ADJUST

SK ecoplant

ITEM	SIZE	Q'TY	DESCRIPTION
		PV3	
P	OD32	1.0M	PIPE, CPVC, PE, SOCKET FUSION, SDR13.5
P	OD25	0.3M	PIPE, CPVC, PE, SOCKET FUSION, SDR13.5
T	OD32	1EA	TEE EQUAL, CPVC, PE, SOCKET FUSION, SDR13.5
T	OD25	1EA	TEE EQUAL, CPVC, PE, SOCKET FUSION, SDR13.5
TR	OD32xOD25	1EA	TEE RED, CPVC, PE, SOCKET FUSION, SDR13.5
F	OD32	3EA	FLG, KS 10K, FF, STUB FLG CPVC /
			BACKING RING(PP)+INSERT(STEEL), SDR13.5
F	OD25	2EA	FLG, KS 10K, FF, STUB FLG CPVC /
			BACKING RING(PP)+INSERT(STEEL), SDR13.5
FB	OD25	1EA	FLG BLIND, KS 10K, FF, CPVC, SDR13.5
G	OD32	3EA	GASKET, KS 10K, FF, PTFE+EPDM, 3.0MM TH'K
G	OD25	3EA	GASKET, KS 10K, FF, PTFE+EPDM, 3.0MM TH'K
B	OD32	3EA	MACHINE BOLT & NYLON NUT :STS 304 / W WASHERS
B	OD25	3SET	MACHINE BOLT & NYLON NUT :STS 304 / W WASHERS
VD	OD32	1EA	DIAPHRAGM VALVE, KS 10K, FF FLG'D, BODY-CPVC /
			TRIM-PDDM, BB, HW
VD	OD25	2EA	DIAPHRAGM VALVE, KS 10K, FF FLG'D, BODY-CPVC /
			TRIM-PDDM, BB, HW
SH	OD32	3EA	SHIELD
SH	OD25	3EA	SHIELD
LOTO	OD25	1EA	LOTO
LOTO	OD32	1EA	LOTO
PG	OD25	1EA	PRESSURE GAUGE, KS 10K, FF

* PIPE : P/P1 * 90° ELBOW : E90 * 45° ELBOW : E45 * TEE : T * RED.TEE : TR * STUB-IN : STU * REINFORCING PAD : RP * CON.RED : RC * ECC.RED : RE * CON.SWAGE : RCS/RCS1 * ECC.SWAGE : RES/RES1 * NIPPLE : NP/NP1/NP2 * CAP : CAP/CAP1 * PLUG : PLG * FULL COUPLING : FC * HALF COUPLING : HF/HF1
* STUB-IN : STU * SOCKET(HDPE/PVC) : SC * SADDLE(HDPE) : SD * FLANGE : F/F1 * GASKET : G/G1/G2 * BOLT & NUT : B/B1 * BLIND FLANGE : FB/FB1 * GATE VA. : VG/VG1/VG2 * BALL VA. : VB/VBL0/VB1/VB1L0/VB2/VB2L0 * BUTTERFLY VA. : VF/VF4 * CHECK VA. : VC/VC1/VC2/VC3/VC4/VC5/VC6/VC7
* GLOBE VA. : VL/VL1/VL2 * DIAPHRAGM VA. : VD/VDL0 * DAMPER : VP * QUICK COUPLING : SQC * FLEXIBLE JOINT(STEEL) : FLXB * FLEXIBLE JOINT(RUBBER) : FLXR * FLEXIBLE JOINT(STEEL_PTFE LINED) : FLXL * FLEXIBLE HOSE : FLXH * STEAM TRAP : ST * SPRAY NOZZLE : SPN * EMERGENCY SHOWER : SSH
* STRAINER(Y-TYPE) : YSTR * STRAINER(T-TYPE) : TSTR * STRAINER(BUCKET-TYPE) : BSTR * ANCHOR PLATE : STOP * BIRD SCREEN : BS * ISOLATION KIT : IK * UNLOADING BOX : UB * AIR TRAP : AT * LOTO : LOTO * SIGHT GLASS : SG * PRESSURE GAUGE : PG * SHILED : SH * SPECIAL BOLT & NUT : BL/BL1

CLIENT SK hynix 2

INSULATION	CODE	N	CONDITION	PRESS. (kg/cm2g)	TEMP. (°C)
	THICK.	–	DESIGN	3.3	60
			OPERATING	3.0	AMB

AREA W14
UNIT 4FA
REF. PLAN DWG. CJ-M15W14-PI-A30-040010-A
REF. P & ID CJ-M15W14-PR-A20-000315

REV. NO.	DATE	DESCRIPTION	BY	CHK	APP'D
0	25.01.24	APPROVED FOR CONSTRUCTION	황래종	안남후	박동영

CONTRACTOR SK ecoplant
PROJECT NAME M15X Ph4 Project
COMMODITY NaOCl
JOB NO. 22330D
LINE NO. OD32-NaOCl-PV3-N-7014
SH'T NO. 01 / 01
REV. 0

경고 : 본 도면은 SK HYNIX의 기업비밀 자료로서, 어떠한 경우에도 목적 외 사용, 복제, 제3자에게 공개, 누설 및 유출할 수 없으며, 회사는 유포자의 불법 사용으로 피해가 발생할 경우 유포자에게 민/형사상 책임을 요구할 수 있음.

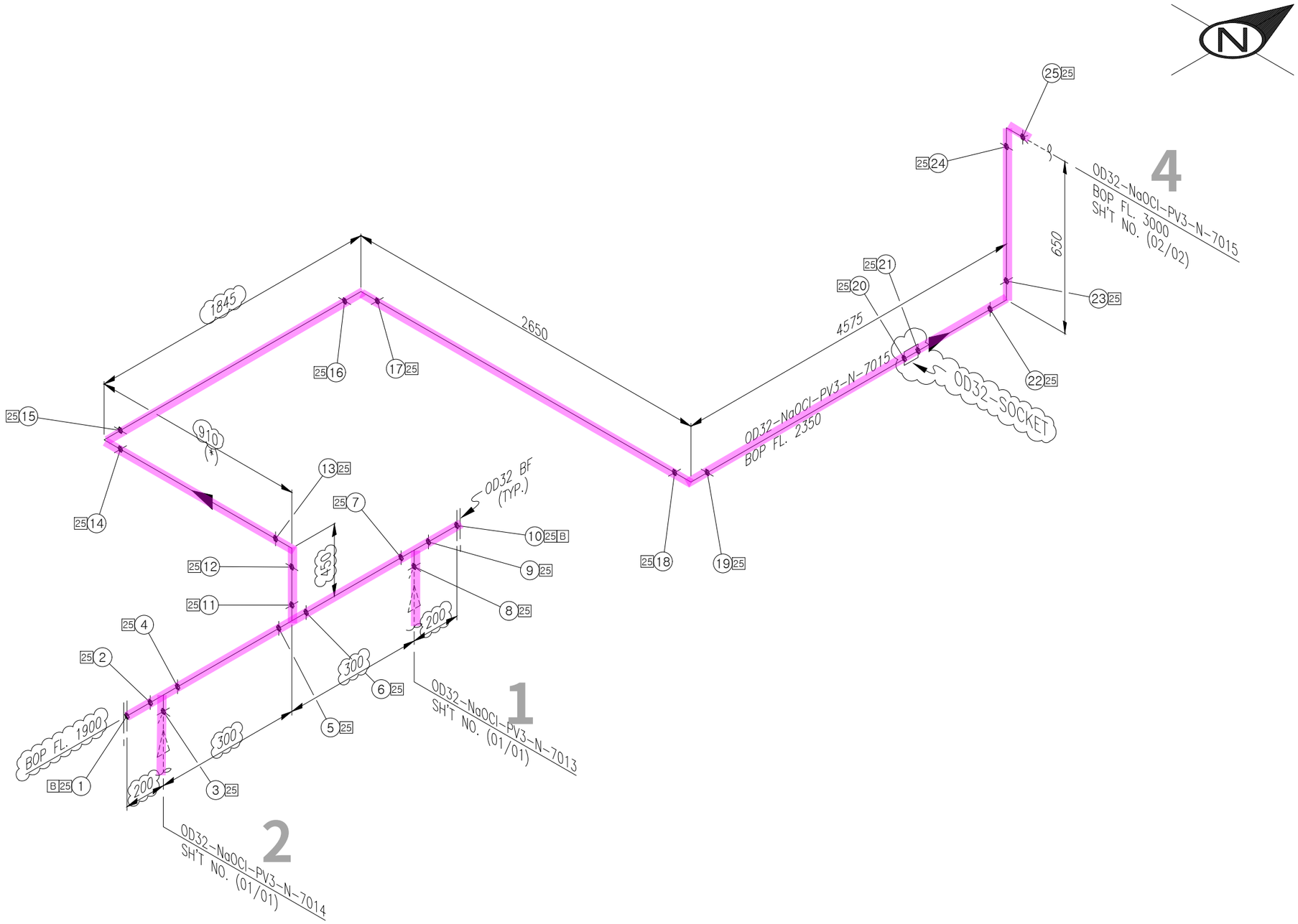

SK ecoplant

ITEM	SIZE	Q'TY	DESCRIPTION
		PV3	
P	OD32	12.1M	PIPE, CPVC, PE, SOCKET FUSION, SDR13.5
E90	OD32	6EA	ELBOW 90 DEG, CPVC, PE, SOCKET FUSION, SDR13.5
T	OD32	3EA	TEE EQUAL, CPVC, PE, SOCKET FUSION, SDR13.5
F	OD32	2EA	FLG, KS 10K, FF, STUB FLG CPVC /
			BACKING RING(PP)+INSERT(STEEL), SDR13.5
FB	OD32	2EA	FLG BLIND, KS 10K, FF, CPVC, SDR13.5
G	OD32	2EA	GASKET, KS 10K, FF, PTFE+EPDM, 3.0MM TH'K
B	OD32	2SET	MACHINE BOLT & NYLON NUT :STS 304 / W WASHERS
SH	OD32	2EA	SHIELD
SC	OD32	1EA	SOCKET, CPVC, PE, SOCKET FUSION, SDR13.5

<NOTE>
1. TRAY & ANGLE,CHANNEL SUPPORT가 적용되는 배관 ELEVATION은 현장 맞춤으로 한다.
2. (*) FIELD ADJUST

* PIPE : P/P1 * 90° ELBOW : E90 * 45° ELBOW : E45 * TEE : T * RED.TEE : TR * STUB-IN : STU * REINFORCING PAD : RP * CON.RED : RC * ECC.RED : RE * CON.SWAGE : RCS/RCS1 * ECC.SWAGE : RES/RES1 * NIPPLE : NP/NP1/NP2 * CAP : CAP/CAP1 * PLUG : PLG * FULL COUPLING : FC * HALF COUPLING : HF/HF1
* STUB-IN : STU * SOCKET(HDPE/PVC) : SC * SADDLE(HDPE) : SD * FLANGE : F/F1 * GASKET : G/G1/G2 * BOLT & NUT : B/B1 * BLIND FLANGE : FB/FB1 * GATE VA. : VG/VG1/VG2 * BALL VA. : VB/VBLO/VB1/VB1LO/VB2/VB2LO * BUTTERFLY VA. : VF/VF4 * CHECK VA. : VC/VC1/VC2/VC3/VC4/VC5/VC6/VC7
* GLOBE VA. : VL/VL1/VL2 * DIAPHRAGM VA. : VD/VDLO * DAMPER : VP * QUICK COUPLING : SQC * FLEXIBLE JOINT(STEEL) : FLXB * FLEXIBLE JOINT(RUBBER) : FLXR * FLEXIBLE JOINT(STEEL_PTFE LINED) : FLXL * FLEXIBLE HOSE : FLXH * STEAM TRAP : ST * SPRAY NOZZLE : SPN * EMERGENCY SHOWER : SSH
* STRAINER(Y-TYPE) : YSTR * STRAINER(T-TYPE) : TSTR * STRAINER(BUCKET-TYPE) : BSTR * ANCHOR PLATE : STOP * BIRD SCREEN : BS * ISOLATION KIT : IK * UNLOADING BOX : UB * AIR TRAP : AT * LOTO : LOTO * SIGHT GLASS : SG * PRESSURE GAUGE : PG * SHILED : SH * SPECIAL BOLT & NUT : BL/BL1

CLIENT SK hynix 3

INSULATION	CODE	N	CONDITION	PRESS. (kg/cm2g)	TEMP. (°C)
	THICK.	–	DESIGN	5.5	60
			OPERATING	5.0	AMB

AREA W14
UNIT 4FA
REF. PLAN DWG. CJ-M15W14-PI-A30-040010-A
REF. P & ID CJ-M15W14-PR-A20-000315

REV. NO.	DATE	DESCRIPTION	BY	CHK	APP'D
0	25.01.24	APPROVED FOR CONSTRUCTION	황래종	안남후	박동영

CONTRACTOR SK ecoplant
PROJECT NAME M15X Ph4 Project
COMMODITY NaOCl
JOB NO. 22330D
LINE NO. OD32-NaOCl-PV3-N-7015
SH'T NO. 01 / 02
REV. 0

경고 : 본 도면은 SK HYNIX의 기업비밀 자료로서, 어떠한 경우에도 목적 외 사용, 복제, 제3자에게 공개, 누설 및 유출할 수 없으며, 회사는 유포자의 불법 사용으로 피해가 발생할 경우 유포자에게 민/형사상 책임을 요구할 수 있음.

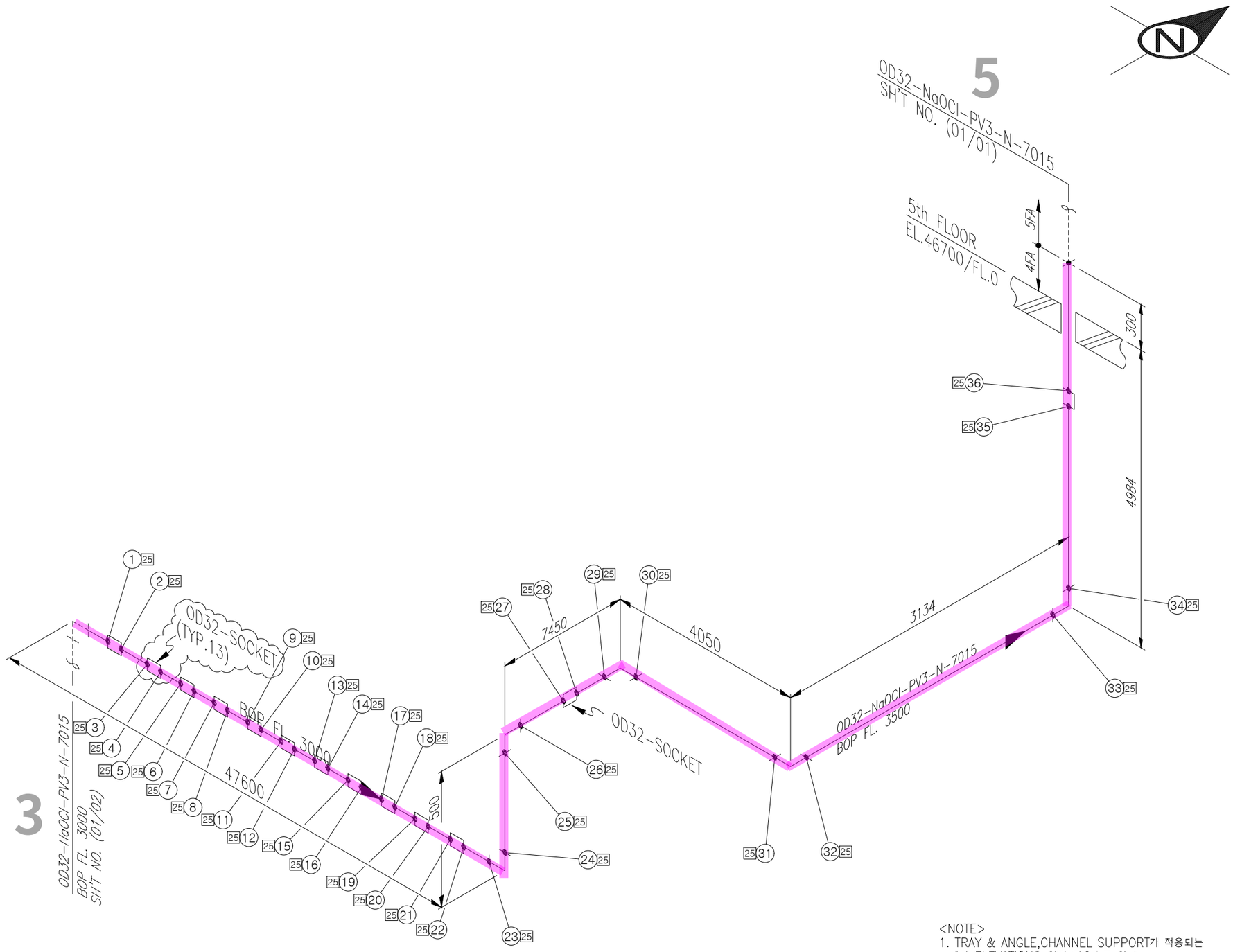

<NOTE>
1. TRAY & ANGLE,CHANNEL SUPPORT가 적용되는
배관 ELEVATION은 현장 맞춤으로 한다.
2. (*) FIELD ADJUST

SK ecoplant

ITEM	SIZE	Q'TY	DESCRIPTION
		PV3	
P	OD32	67.7M	PIPE, CPVC, PE, SOCKET FUSION, SDR13.5
E90	OD32	5EA	ELBOW 90 DEG, CPVC, PE, SOCKET FUSION, SDR13.5
SC	OD32	13EA	SOCKET, CPVC, PE, SOCKET FUSION, SDR13.5

* PIPE : P/P1 * 90° ELBOW : E90 * 45° ELBOW : E45 * TEE : T * RED.TEE : TR * STUB-IN : STU * REINFORCING PAD : RP * CON.RED : RC * ECC.RED : RE * CON.SWAGE : RCS/RCS1 * ECC.SWAGE : RES/RES1 * NIPPLE : NP/NP1/NP2 * CAP : CAP/CAP1 * PLUG : PLG * FULL COUPLING : FC * HALF COUPLING : HF/HF1
* STUB-IN : STU * SOCKET(HDPE/PVC) : SC * SADDLE(HDPE) : SD * FLANGE : F/F1 * GASKET : G/G1/G2 * BOLT & NUT : B/B1 * BLIND FLANGE : FB/FB1 * GATE VA. : VG/VG1/VG2 * BALL VA. : VB/VBL0/VB1/VB1L0/VB2/VB2L0 * BUTTERFLY VA. : VF/VF4 * CHECK VA. : VC/VC1/VC2/VC3/VC4/VC5/VC6/VC7
* GLOBE VA. : VL/VL1/VL2 * DIAPHRAGM VA. : VD/VDL0 * DAMPER : VP * QUICK COUPLING : SQC * FLEXIBLE JOINT(STEEL) : FLXB * FLEXIBLE JOINT(RUBBER) : FLXR * FLEXIBLE JOINT(STEEL_PTFE LINED) : FLXL * FLEXIBLE HOSE : FLXH * STEAM TRAP : ST * SPRAY NOZZLE : SPN * EMERGENCY SHOWER : SSH
* STRAINER(Y-TYPE) : YSTR * STRAINER(T-TYPE) : TSTR * STRAINER(BUCKET-TYPE) : BSTR * ANCHOR PLATE : STOP * BIRD SCREEN : BS * ISOLATION KIT : IK * UNLOADING BOX : UB * AIR TRAP : AT * LOTO : LOTO * SIGHT GLASS : SG * PRESSURE GAUGE : PG * SHILED : SH * SPECIAL BOLT & NUT : BL/BL1

CLIENT SK hynix 4

INSULATION	CODE	N	CONDITION	PRESS. (kg/cm2g)	TEMP. (°C)
	THICK.	–	DESIGN	5.5	60
			OPERATING	5.0	AMB

AREA W14
UNIT 4FA
REF. PLAN DWG. CJ-M15W14-PI-A30-040010-B
REF. P & ID CJ-M15W14-PR-A20-000315

REV. NO.	DATE	DESCRIPTION	BY	CHK	APP'D
0	25.01.24	APPROVED FOR CONSTRUCTION	황래종	안남후	박동영

CONTRACTOR SK ecoplant
PROJECT NAME M15X Ph4 Project
COMMODITY NaOCl
JOB NO. 22330D
LINE NO. OD32-NaOCl-PV3-N-7015
SH'T NO. 02 / 02
REV. 0

경고 : 본 도면은 SK HYNIX의 기업비밀 자료로서, 어떠한 경우에도 목적 외 사용, 복제, 제3자에게 공개, 누설 및 유출할 수 없으며, 회사는 유포자의 불법 사용으로 피해가 발생할 경우 유포자에게 민/형사상 책임을 요구할 수 있음.

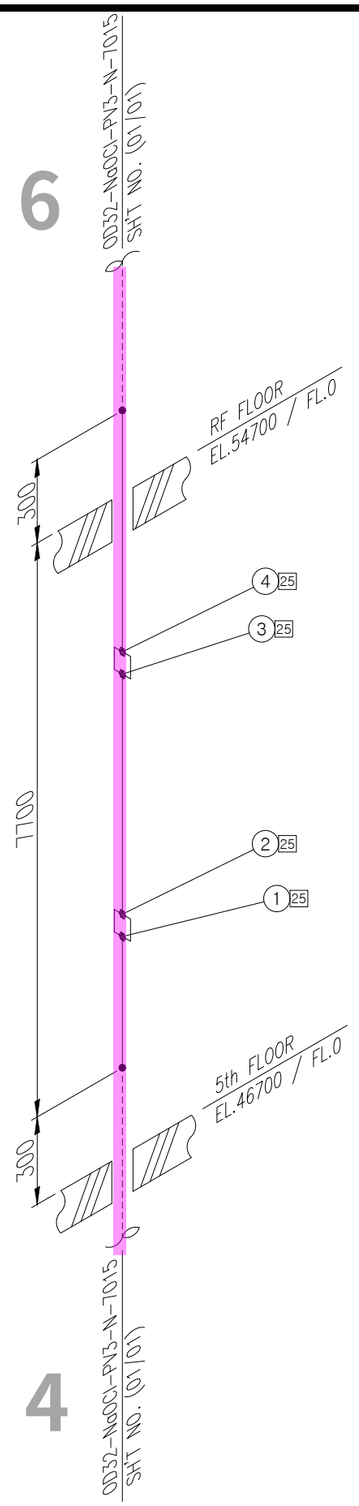

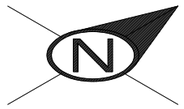

SK ecoplant

ITEM	SIZE	Q'TY	DESCRIPTION
PV3			
P	OD32	8.0M	PIPE, CPVC, PE, SOCKET FUSION, SDR13.5
SC	OD32	2EA	SOCKET, CPVC, PE, SOCKET FUSION, SDR13.5

<NOTE>
1. (*) FIELD ADJUST

* PIPE : P/P1 * 90° ELBOW : E90 * 45° ELBOW : E45 * TEE : T * RED.TEE : TR * STUB-IN : STU * REINFORCING PAD : RP * CON.RED : RC * ECC.RED : RE * CON.SWAGE : RCS/RCS1 * ECC.SWAGE : RES/RES1 * NIPPLE : NP/NP1/NP2 * CAP : CAP/CAP1 * PLUG : PLG * FULL COUPLING : FC * HALF COUPLING : HF/HF1
* STUB-IN : STU * SOCKET(HDPE/PVC) : SC * SADDLE(HDPE) : SD * FLANGE : F/F1 * GASKET : G/G1/G2 * BOLT & NUT : B/B1 * BLIND FLANGE : FB/FB1 * GATE VA. : VG/VG1/VG2 * BALL VA. : VB/VBL0/VB1/VB1L0/VB2/VB2L0 * BUTTERFLY VA. : VF/VF4 * CHECK VA. : VC/VC1/VC2/VC3/VC4/VC5/VC6/VC7
* GLOBE VA. : VL/VL1/VL2 * DIAPHRAGM VA. : VD/VDL0 * DAMPER : VP * QUICK COUPLING : SQC * FLEXIBLE JOINT(STEEL) : FLXB * FLEXIBLE JOINT(RUBBER) : FLXR * FLEXIBLE JOINT(STEEL_PTFE LINED) : FLXL * FLEXIBLE HOSE : FLXH * STEAM TRAP : ST * SPRAY NOZZLE : SPN * EMERGENCY SHOWER : SSH
* STRAINER(Y-TYPE) : YSTR * STRAINER(T-TYPE) : TSTR * STRAINER(BUCKET-TYPE) : BSTR * ANCHOR PLATE : STOP * BIRD SCREEN : BS * ISOLATION KIT : IK * UNLOADING BOX : UB * AIR TRAP : AT * LOTO : LOTO * SIGHT GLASS : SG * PRESSURE GAUGE : PG * SHILED : SH * SPECIAL BOLT & NUT : BL/BL1

CLIENT SK hynix 5

INSULATION	CODE	N	CONDITION	PRESS. (kg/cm2g)	TEMP. (°C)
	THICK.	–	DESIGN	0.8	60
			OPERATING	ATM	AMB

AREA W14
UNIT 5FA
REF. PLAN DWG. CJ-M15W14-PI-A30-05006-A
REF. P & ID CJ-M15W14-PR-A20-000301

REV. NO.	DATE	DESCRIPTION	BY	CHK	APP'D
0	25.01.24	APPROVED FOR CONSTRUCTION	황래종	안남후	박동영

CONTRACTOR SK ecoplant
PROJECT NAME M15X Ph4 Project
COMMODITY NaOCl
JOB NO. 22330D
LINE NO. OD32-NaOCl-PV3-N-7015
SH'T NO. 01 / 01
REV. 0

경고 : 본 도면은 SK HYNIX의 기업비밀 자료로서, 어떠한 경우에도 목적 외 사용, 복제, 제3자에게 공개, 누설 및 유출할 수 없으며, 회사는 유포자의 불법 사용으로 피해가 발생할 경우 유포자에게 민/형사상 책임을 요구할 수 있음.

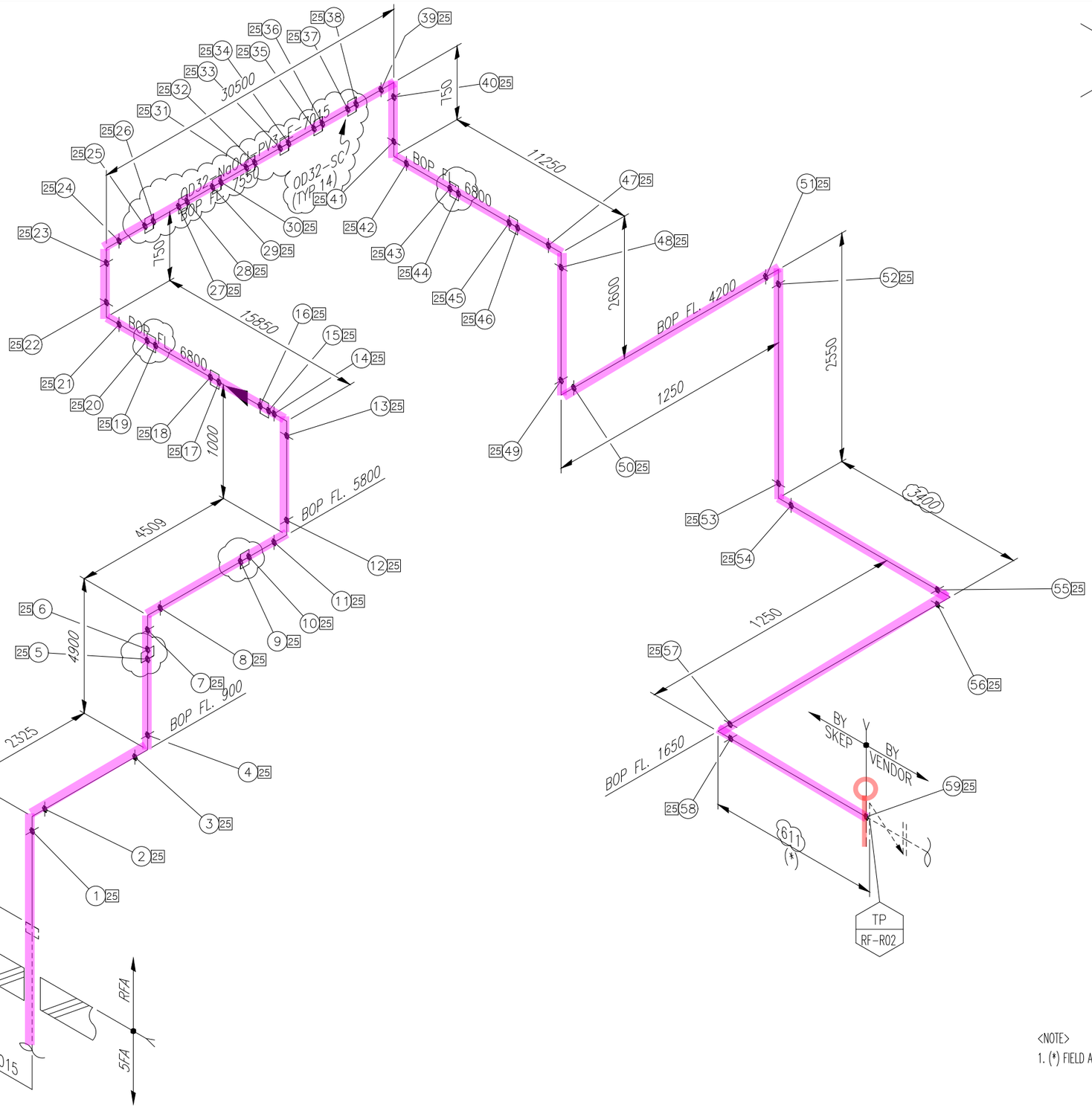

<NOTE>
1. (*) FIELD ADJUST

ITEM	SIZE	Q'TY	DESCRIPTION
		PV3	
P	OD32	80.4M	PIPE, CPVC, PE, SOCKET FUSION, SDR13.5
E90	OD32	15EA	ELBOW 90 DEG, CPVC, PE, SOCKET FUSION, SDR13.5
F	OD32	1EA	FLG, KS 10K, FF, STUB FLG CPVC /
			BACKING RING(PP)+INSERT(STEEL), SDR13.5
G	OD32	1EA	GASKET, KS 10K, FF, PTFE+EPDM, 3.0MM TH'K
B1	OD32	1EA	MACHINE BOLT & NYLON NUT :STS 304 / W WASHERS
INC	25tXOD32	83.8M	관 보온재(고무발포) + 알루미늄 CASING
SC	OD110	14EA	SOCKET, CPVC, PE, SOCKET FUSION, SDR13.5

* PIPE : P/P1 * 90° ELBOW : E90 * 45° ELBOW : E45 * TEE : T * RED.TEE : TR * STUB-IN : STU * REINFORCING PAD : RP * CON.RED : RC * ECC.RED : RE * CON.SWAGE : RCS/RCS1 * ECC.SWAGE : RES/RES1 * NIPPLE : NP/NP1/NP2 * CAP : CAP/CAP1 * PLUG : PLG * FULL COUPLING : FC * HALF COUPLING : HF/HF1
* STUB-IN : STU * SOCKET(HDPE/PVC) : SC * SADDLE(HDPE) : SD * FLANGE : F/F1 * GASKET : G/G1/G2 * BOLT & NUT : B/B1 * BLIND FLANGE : FB/FB1 * GATE VA. : VG/VG1/VG2 * BALL VA. : VB/VBL0/VB1/VB1L0/VB2/VB2L0 * BUTTERFLY VA. : VF/VF4 * CHECK VA. : VC/VC1/VC2/VC3/VC4/VC5/VC6/VC7
* GLOBE VA. : VL/VL1/VL2 * DIAPHRAGM VA. : VD/VDL0 * DAMPER : VP * QUICK COUPLING : SQC * FLEXIBLE JOINT(STEEL) : FLXB * FLEXIBLE JOINT(RUBBER) : FLXR * FLEXIBLE JOINT(STEEL_PTFE LINED) : FLXL * FLEXIBLE HOSE : FLXH * STEAM TRAP : ST * SPRAY NOZZLE : SPN * EMERGENCY SHOWER : SSH
* STRAINER(Y-TYPE) : YSTR * STRAINER(T-TYPE) : TSTR * STRAINER(BUCKET-TYPE) : BSTR * ANCHOR PLATE : STOP * BIRD SCREEN : BS * ISOLATION KIT : IK * UNLOADING BOX : UB * AIR TRAP : AT * LOTO : LOTO * SIGHT GLASS : SG * PRESSURE GAUGE : PG * SHILED : SH * SPECIAL BOLT & NUT : BL/BL1

CLIENT SK hynix 6

INSULATION	CODE	E	CONDITION	PRESS. (kg/cm2g)	TEMP. (°C)
	THICK.	25	DESIGN	1	60
			OPERATING	ATM	AMB

AREA W14
UNIT RFA
REF. PLAN DWG. CJ-M15W14-PI-A30-R10006-A
REF. P & ID CJ-M15W14-PR-A20-000315

REV. NO.	DATE	DESCRIPTION	BY	CHK	APP'D
1	25.03.31	REVISED AS MARKED	황래종	안남후	박동영
0	25.01.24	APPROVED FOR CONSTRUCTION	황래종	안남후	박동영

CONTRACTOR SK ecoplant
PROJECT NAME M15X Ph4 Project
COMMODITY NaOCl
JOB NO. 22330D
LINE NO. OD32-NaOCl-PV3-E-7015
SH'T NO. 01 / 01
REV. 1

경고 : 본 도면은 SK HYNIX의 기업비밀 자료로서, 어떠한 경우에도 목적 외 사용, 복제, 제3자에게 공개, 누설 및 유출할 수 없으며, 회사는 유포자의 불법 사용으로 피해가 발생할 경우 유포자에게 민/형사상 책임을 요구할 수 있음.

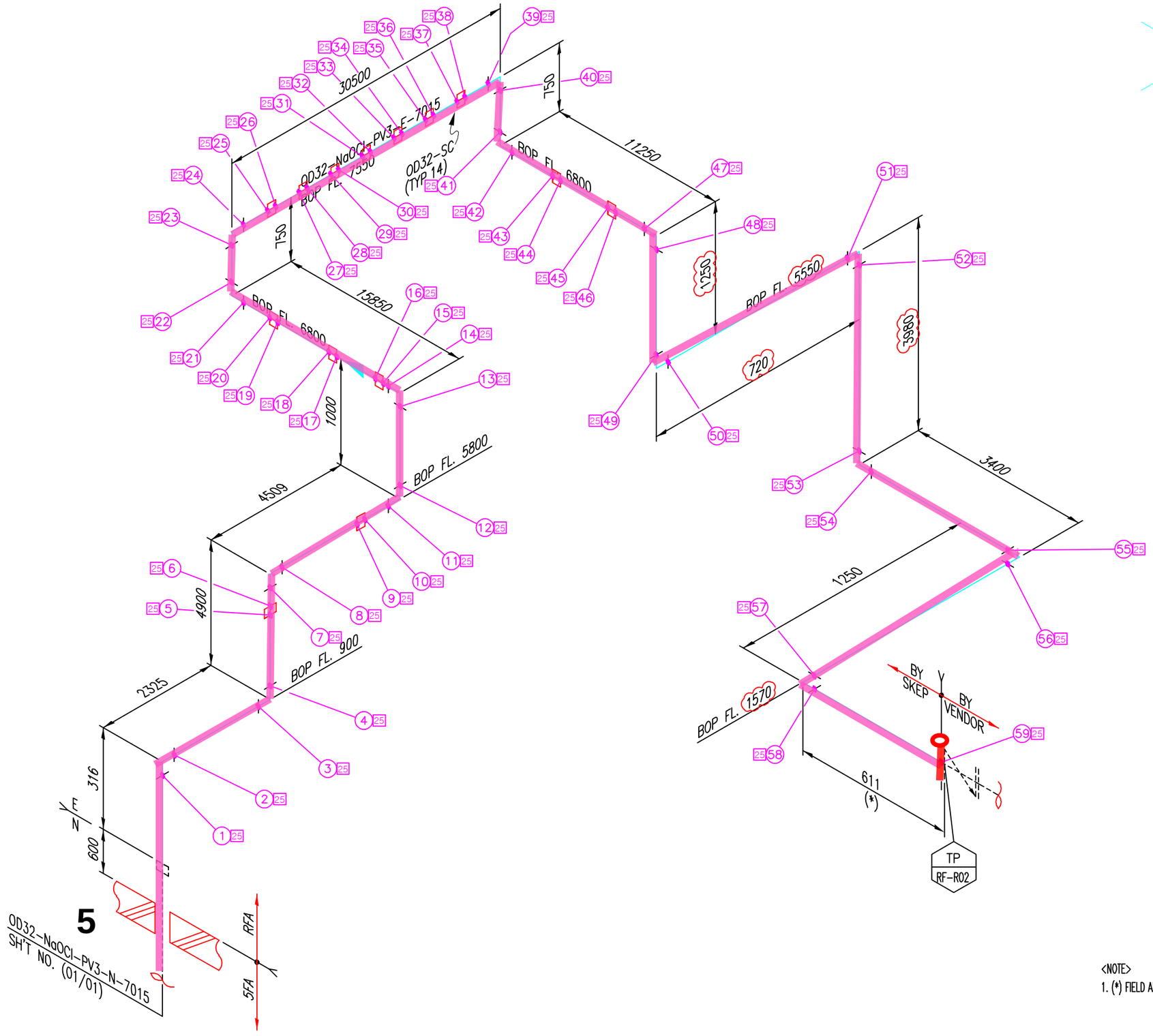

<NOTE>
1. (*) FIELD ADJUST

ITEM	SIZE	Q'TY	DESCRIPTION
		PV3	
P	OD32	83.4M	PIPE, CPVC, PE, SOCKET FUSION, SDR13.5
E90	OD32	15EA	ELBOW 90 DEG, CPVC, PE, SOCKET FUSION, SDR13.5
F	OD32	1EA	FLG, KS 10K, FF, STUB FLG CPVC /
			BACKING RING(PP)+INSERT(STEEL), SDR13.5
G	OD32	1EA	GASKET, KS 10K, FF, PTFE+EPDM, 3.0MM TH'K
B1	OD32	1EA	MACHINE BOLT & NYLON NUT :STS 304 / W WASHERS
INC	25tXOD32	83.8M	관 보온재(고무발포) + 알루미늄 CASING
SC	OD110	14EA	SOCKET, CPVC, PE, SOCKET FUSION, SDR13.5

* PIPE : P/P1 * 90° ELBOW : E90 * 45° ELBOW : E45 * TEE : T * RED.TEE : TR * STUB-IN : STU * REINFORCING PAD : RP * CON.RED : RC * ECC.RED : RE * CON.SWAGE : RCS/RCS1 * ECC.SWAGE : RES/RES1 * NIPPLE : NP/NP1/NP2 * CAP : CAP/CAP1 * PLUG : PLG * FULL COUPLING : FC * HALF COUPLING : HF/HF1
* STUB-IN : STU * SOCKET(HDPE/PVC) : SC * SADDLE(HDPE) : SD * FLANGE : F/F1 * GASKET : G/G1/G2 * BOLT & NUT : B/B1 * BLIND FLANGE : FB/FB1 * GATE VA. : VG/VG1/VG2 * BALL VA. : VB/VBLO/VB1/VB1LO/VB2/VB2LO * BUTTERFLY VA. : VF/VF4 * CHECK VA. : VC/VC1/VC2/VC3/VC4/VC5/VC6/VC7
* GLOBE VA. : VL/VL1/VL2 * DIAPHRAGM VA. : VD/VDLO * DAMPER : VP * QUICK COUPLING : SQC * FLEXIBLE JOINT(STEEL) : FLXB * FLEXIBLE JOINT(RUBBER) : FLXR * FLEXIBLE JOINT(STEEL_PTFE LINED) : FLXL * FLEXIBLE HOSE : FLXH * STEAM TRAP : ST * SPRAY NOZZLE : SPN * EMERGENCY SHOWER : SSH
* STRAINER(Y-TYPE) : YSTR * STRAINER(T-TYPE) : TSTR * STRAINER(BUCKET-TYPE) : BSTR * ANCHOR PLATE : STOP * BIRD SCREEN : BS * ISOLATION KIT : IK * UNLOADING BOX : UB * AIR TRAP : AT * LOTO : LOTO * SIGHT GLASS : SG * PRESSURE GAUGE : PG * SHILED : SH * SPECIAL BOLT & NUT : BL/BL1

CLIENT: SK hynix

6

INSULATION	CODE	E	CONDITION	PRESS. (kg/cm2g)	TEMP. (°C)	AREA	W14
	THICK.	25	DESIGN	1	60	UNIT	RFA
			OPERATING	ATM	AMB	REF. PLAN DWG.	CJ-M15W14-PI-A30-R10006-A
						REF. P & ID	CJ-M15W14-PR-A20-000315

REV. NO.	DATE	DESCRIPTION	BY	CHK	APP'D
1	25.03.31	REVISED AS MARKED	황래종	안남후	박동영
0	25.01.24	APPROVED FOR CONSTRUCTION	황래종	안남후	박동영

CONTRACTOR: SK ecoplant
PROJECT NAME: M15X Ph4 Project
COMMODITY: NaOCl
JOB NO.: 22330D
LINE NO.: OD32-NaOCl-PV3-E-7015
SH'T NO.: 01 / 01
REV.: 1

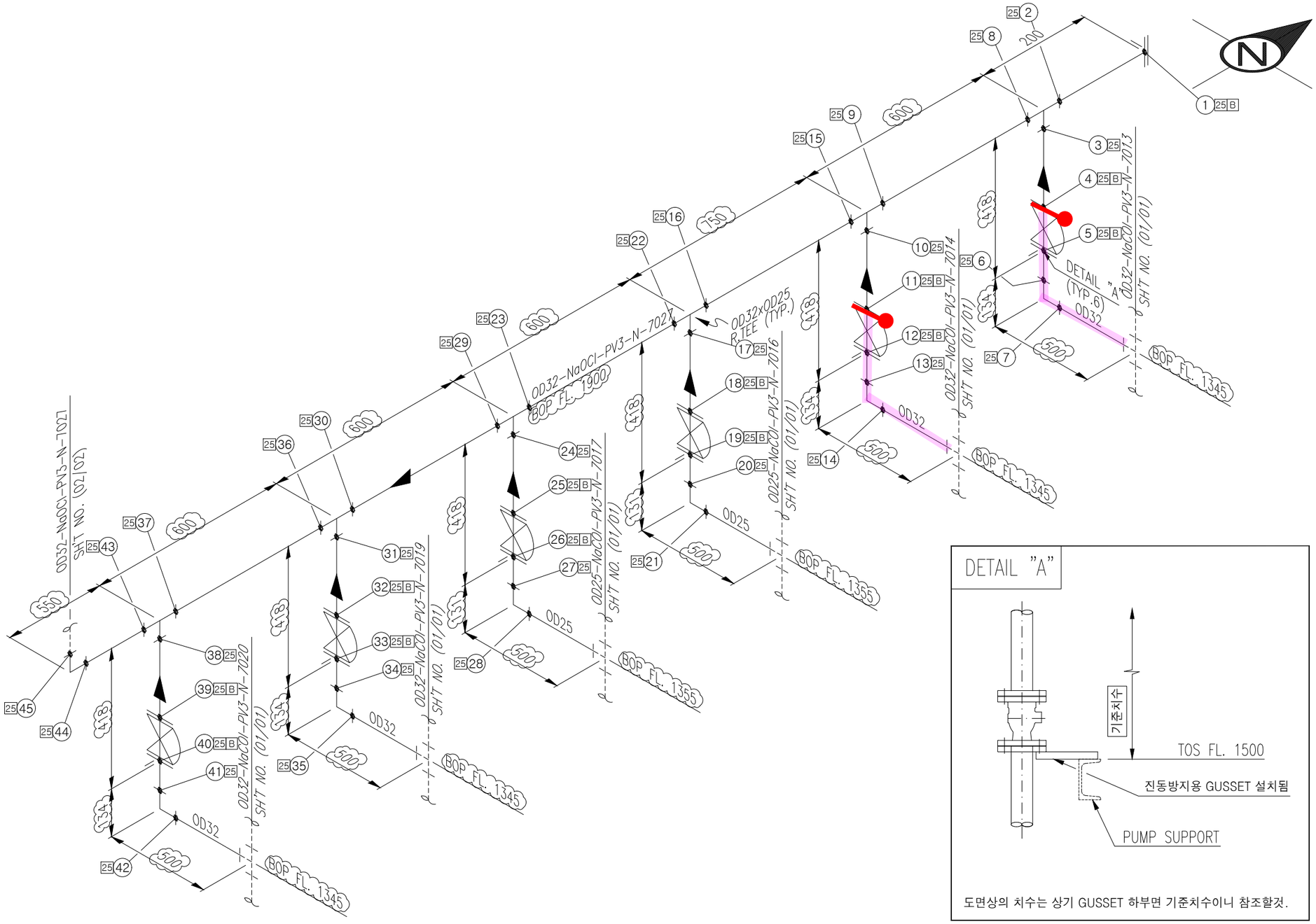

도면상의 치수는 상기 GUSSET 하부면 기준치수이니 참조할것.

<NOTE>
1. TRAY & ANGLE,CHANNEL SUPPORT가 적용되는 배관 ELEVATION은 현장 맞춤으로 한다.
2. (*) FIELD ADJUST

SK ecoplant

ITEM	SIZE	Q'TY	DESCRIPTION
		PV3	
P	OD32	9.2M	PIPE, CPVC, PE, SOCKET FUSION, SDR13.5
P	OD25	2.5M	PIPE, CPVC, PE, SOCKET FUSION, SDR13.5
E90	OD32	5EA	ELBOW 90 DEG, CPVC, PE, SOCKET FUSION, SDR13.5
E90	OD25	2EA	ELBOW 90 DEG, CPVC, PE, SOCKET FUSION, SDR13.5
T	OD32	4EA	TEE EQUAL, CPVC, PE, SOCKET FUSION, SDR13.5
TR	OD32xOD25	2EA	TEE RED, CPVC, PE, SOCKET FUSION, SDR13.5
VD	OD32	4EA	DIAPHRAGM VALVE, KS 10K, FF FLG'D, BODY-CPVC /
			TRIM-PDDM, BB, HW
VD	OD25	2EA	DIAPHRAGM VALVE, KS 10K, FF FLG'D, BODY-CPVC /
			TRIM-PDDM, BB, HW
F	OD32	9EA	FLG, KS 10K, FF, STUB FLG CPVC /
			BACKING RING(PP)+INSERT(STEEL), SDR13.5
F	OD25	4EA	FLG, KS 10K, FF, STUB FLG CPVC /
			BACKING RING(PP)+INSERT(STEEL), SDR13.5
FB	OD32	1EA	FLG BLIND, KS 10K, FF, CPVC, SDR13.5
G	OD32	9EA	GASKET, KS 10K, FF, PTFE+EPDM, 3.0MM TH'K
G	OD25	4EA	GASKET, KS 10K, FF, PTFE+EPDM, 3.0MM TH'K
B	OD32	9SET	MACHINE BOLT & NYLON NUT :STS 304 / W WASHERS
B	OD25	4SET	MACHINE BOLT & NYLON NUT :STS 304 / W WASHERS
SH	OD32	9EA	SHIELD
SH	OD25	4EA	SHIELD

* PIPE : P/P1 * 90° ELBOW : E90 * 45° ELBOW : E45 * TEE : T * RED.TEE : TR * STUB-IN : STU * REINFORCING PAD : RP * CON.RED : RC * ECC.RED : RE * CON.SWAGE : RCS/RCS1 * ECC.SWAGE : RES/RES1 * NIPPLE : NP/NP1/NP2 * CAP : CAP/CAP1 * PLUG : PLG * FULL COUPLING : FC * HALF COUPLING : HF/HF1
* STUB-IN : STU * SOCKET(HDPE/PVC) : SC * SADDLE(HDPE) : SD * FLANGE : F/F1 * GASKET : G/G1/G2 * BOLT & NUT : B/B1 * BLIND FLANGE : FB/FB1 * GATE VA. : VG/VG1/VG2 * BALL VA. : VB/VBLO/VB1/VB1LO/VB2/VB2LO * BUTTERFLY VA. : VF/VF4 * CHECK VA. : VC/VC1/VC2/VC3/VC4/VC5/VC6/VC7
* GLOBE VA. : VL/VL1/VL2 * DIAPHRAGM VA. : VD/VDLO * DAMPER : VP * QUICK COUPLING : SQC * FLEXIBLE JOINT(STEEL) : FLXB * FLEXIBLE JOINT(RUBBER) : FLXR * FLEXIBLE JOINT(STEEL_PTFE LINED) : FLXL * FLEXIBLE HOSE : FLXH * STEAM TRAP : ST * SPRAY NOZZLE : SPN * EMERGENCY SHOWER : SSH
* STRAINER(Y-TYPE) : YSTR * STRAINER(T-TYPE) : TSTR * STRAINER(BUCKET-TYPE) : BSTR * ANCHOR PLATE : STOP * BIRD SCREEN : BS * ISOLATION KIT : IK * UNLOADING BOX : UB * AIR TRAP : AT * LOTO : LOTO * SIGHT GLASS : SG * PRESSURE GAUGE : PG * SHILED : SH * SPECIAL BOLT & NUT : BL/BL1

CLIENT SK hynix 7

INSULATION	CODE	N	CONDITION	PRESS. (kg/cm2g)	TEMP. (°C)
	THICK.	-	DESIGN	3.3	60
			OPERATING	3.0	AMB

AREA W14
UNIT 4FA
REF. PLAN DWG. CJ-M15W14-PI-A30-040010-A
REF. P & ID CJ-M15W14-PR-A20-000315

REV. NO.	DATE	DESCRIPTION	BY	CHK	APP'D
0	25.01.24	APPROVED FOR CONSTRUCTION	황래종	안남후	박동영

CONTRACTOR SK ecoplant
PROJECT NAME M15X Ph4 Project
COMMODITY NaOCl
JOB NO. 22330D
LINE NO. OD32-NaOCl-PV3-N-7027
SH'T NO. 01 / 02
REV. 0

경고 : 본 도면은 SK HYNIX의 기업비밀 자료로서, 어떠한 경우에도 목적 외 사용, 복제, 제3자에게 공개, 누설 및 유출할 수 없으며, 회사는 유포자의 불법 사용으로 피해가 발생할 경우 유포자에게 민/형사상 책임을 요구할 수 있음.