DRAWING LIST FOR TEST PACKAGE

NaOCL-593

PROJECT NO.: 22328D

PROJECT TITLE : M15X Ph2 Project

No	PKG No	UNIT	LINE NUMBER			P&ID		REMARK
			ISO DRAWING No	SHEET	REV	P&ID No	REV	
1	593	1FA	OD25-NaOCl-PV3-N-7018-01	1 OF 1	0	CJ-M15W14-PR-A20-000313		
2	593	R2FA	OD25-NaOCl-PV3-E-7018-01	1 OF 1	1	CJ-M15W14-PR-A20-000313		
3	593	2FA	OD25-NaOCl-PV3-E-7018-01	1 OF 1	0	CJ-M15W14-PR-A20-000313		
4	593	3FA	OD25-NaOCl-PV3-7018-01	1 OF 1	0	CJ-M15W14-PR-A20-000313		
5	593	4FA	OD25-NaOCl-PV3-N-7018-02	2 OF 2	0	CJ-M15W14-PR-A20-000313		
6	593	4FA	OD25-NaOCl-PV3-N-7018-01	1 OF 2	1	CJ-M15W14-PR-A20-000315		
7	593	4FA	OD25-NaOCl-PV3-N-7016-01	1 OF 1	0	CJ-M15W14-PR-A20-000315		
8	593	4FA	OD25-NaOCl-PV3-N-7017-01	1 OF 1	0	CJ-M15W14-PR-A20-000315		
9	593	4FA	OD32-NaOCl-PV3-N-7027-01	1 OF 2	0	CJ-M15W14-PR-A20-000315		

ITEM NO.		W14-T-4707	W14-T-4708
SERVICE		RO TREATED WATER NEUTRALIZATION TANK	RO TREATED WATER TANK
Q'TY		1	1
TYPE		RECTANGULAR	RECTANGULAR
SIZE	W x L x H m	2.675 x 5.775 x 6.6 (EH 5.2)	6.0 x 17.4 x 7.45 (EH 7.45) 2.1 x 5.775 x 14.05 (EH 12.65)
CAPA.	m3	102 (EH 80)	948 (EH 931)
HRT	hr	0.1	1.1
MAT'L		P.C + FRP	P.C + FRP

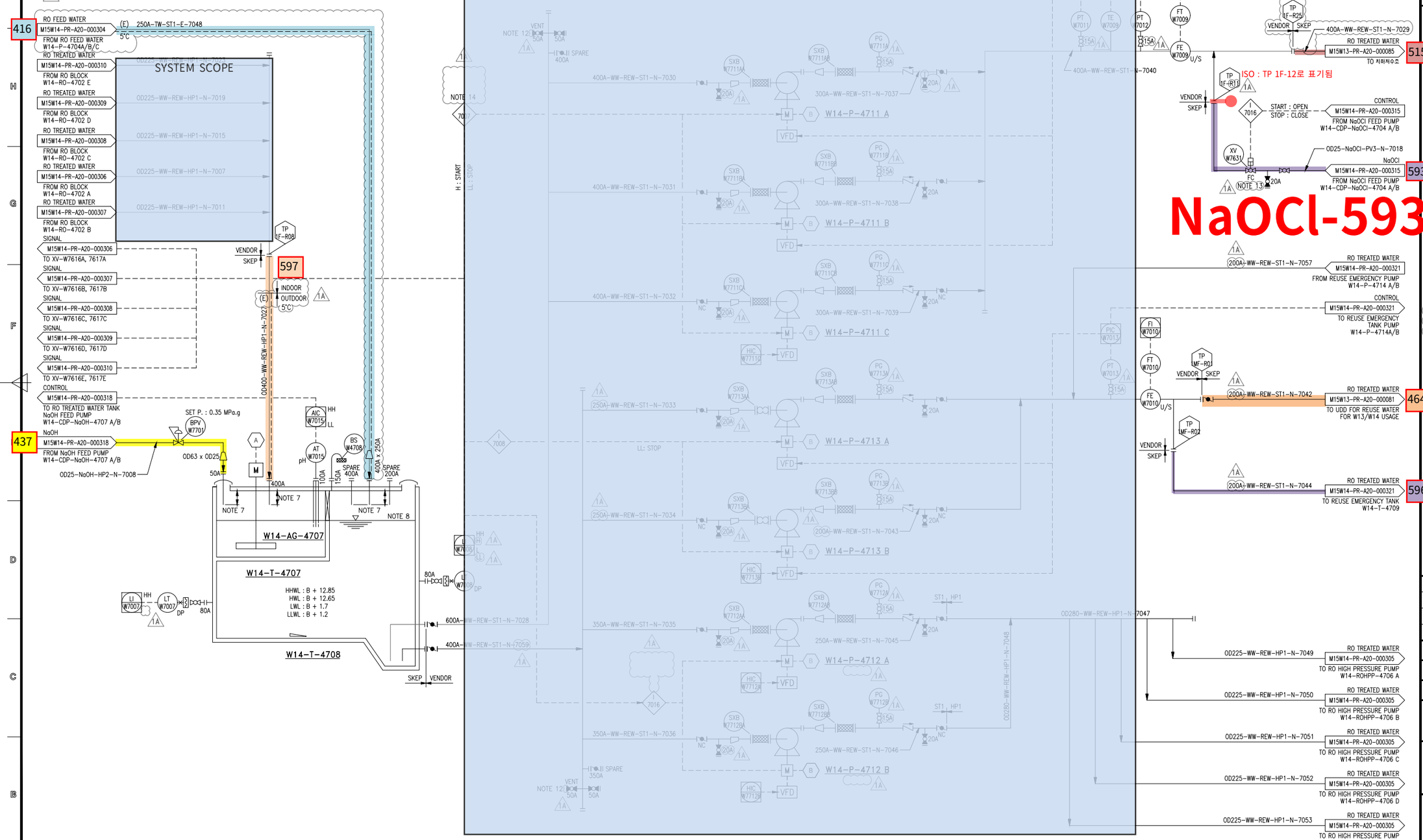

ITEM NO.	W14-AG-4707
SERVICE	RO TREATED WATER NEUTRALIZATION AGITATOR
Q'TY	1
TYPE	PITCHED PADDLE
SPEED rpm	25
MAT'L	STS304L / STS304
POWER kW	3.7

ITEM NO.	W14-P-4711 A/B/C	W14-P-4712 A/B	W14-P-4713 A/B
SERVICE	REUSE WATER PUMP	RO FLUSHING PUMP	REUSE WATER PUMP FOR W13/W14
Q'TY	2 + 1	1 + 1	1 + 1
TYPE	CENTRIFUGAL (VWF)	CENTRIFUGAL (VWF)	CENTRIFUGAL (VWF)
CAPA. m3/hr x mH	460 x 40 (0.39MPa)	360 x 45 (0.44MPa)	250 x 50 (0.49MPa)
MAT'L	SSC13/SSC14	SSC13/SSC14	SSC13/SSC14
POWER kW	75	75	75

대외비

KEY PLAN (1F)

NOTE

1. TANK와 HWL 이하로 연결되는 모든 배관은 BLOCK VALVE 설치할 것.
2. 원수 인입지점은 펌프 흡입측에서 최대한 이격하여 설치.
3. 2m 이상 높은 곳에 설치된 밸브는 CHAIN VALVE 또는 PLATFORM 구성할 것.
4. MANHOLE : 2개 이상 설치한다. MANHOLE COVER : FRP
5. 운전시 CLOSE 되는 배관에는 LOTO 설치.
6. CENTRIFUGAL PUMP MAT'L 표기 : CASING / IMPELLER
7. TANK 내 유입, 육안 확인이 가능하고, 비산되지 않도록 최소 깊이로 반영할 것. (SLAB로 부터 100 mm 떨어질 것)
8. 내부 FRP LINING TANK의 SLEEVE는 SUS304 + FRP LINING 적용.
9. I-7007 (W14-P-4711 A/B/C AUTO STOP) : REMOTE STATUS에서 W14-T-4708 LEVEL (LI-W7008) LOW LOW STOP 또는 RO 운전 SEQUENCE에 따라 운전됨. (DETAIL 사항은 추후 VENDOR 선정 이후 확정됨.)
10. I-7008 (W14-P-4713 A/B AUTO STOP) : REMOTE STATUS에서 W14-T-4708 LEVEL (LI-W7008) LOW LOW STOP.
11. I-7016 (W14-P-4712 A/B AUTO STOP) : REMOTE STATUS에서 W14-T-4708 LEVEL (LI-W7008) LOW LOW STOP 또는 RO 운전 SEQUENCE에 따라 운전됨. (DETAIL 사항은 추후 VENDOR 선정 이후 확정됨.)
12. 초기 가동시에 PUMP SUCTION HEADER의 AIR 제거용 VALVE.
13. 공급 : VENDOR / 설치 : SKEP
14. UF/RO는 PLC에 의해서 운전되며, 별도의 LCP는 공급되지않음.

REV.	DESCRIPTION	DATE
1A	REVISED AFC	25.08.14
1	REVISED AFC	25.01.17
0	APPROVAL FOR CONSTRUCTION	24.10.31

제 도 DRAWN BY	이 인 학
검 토 CHECKED BY	한 진 희
승 인 APPROVED BY	박 동 영
제 작 사	SK 에코플랜트
공 사 명 PROJECT TITLE	M15X Ph4 WWT Project
도면명 DWG. TITLE	PIPING & INSTRUMENT DIAGRAM REUSE PUMP
축 척 SCALE	NONE
날 짜 DATE	2025. 08. 14
PROJECT NO.	22330D
도면번호 SHEET NO.	CJ-M15W14-PR-A20-000313
REV.	1A

A1(594x841mm ±2mm)

C:₩Users₩TOPWDesktop₩P&ID251013₩[M15X Ph-4 for 인허가]CAD FILE_0910₩CJ-M15W14-PR-A20-000313 R1 P&ID FOR REUSE

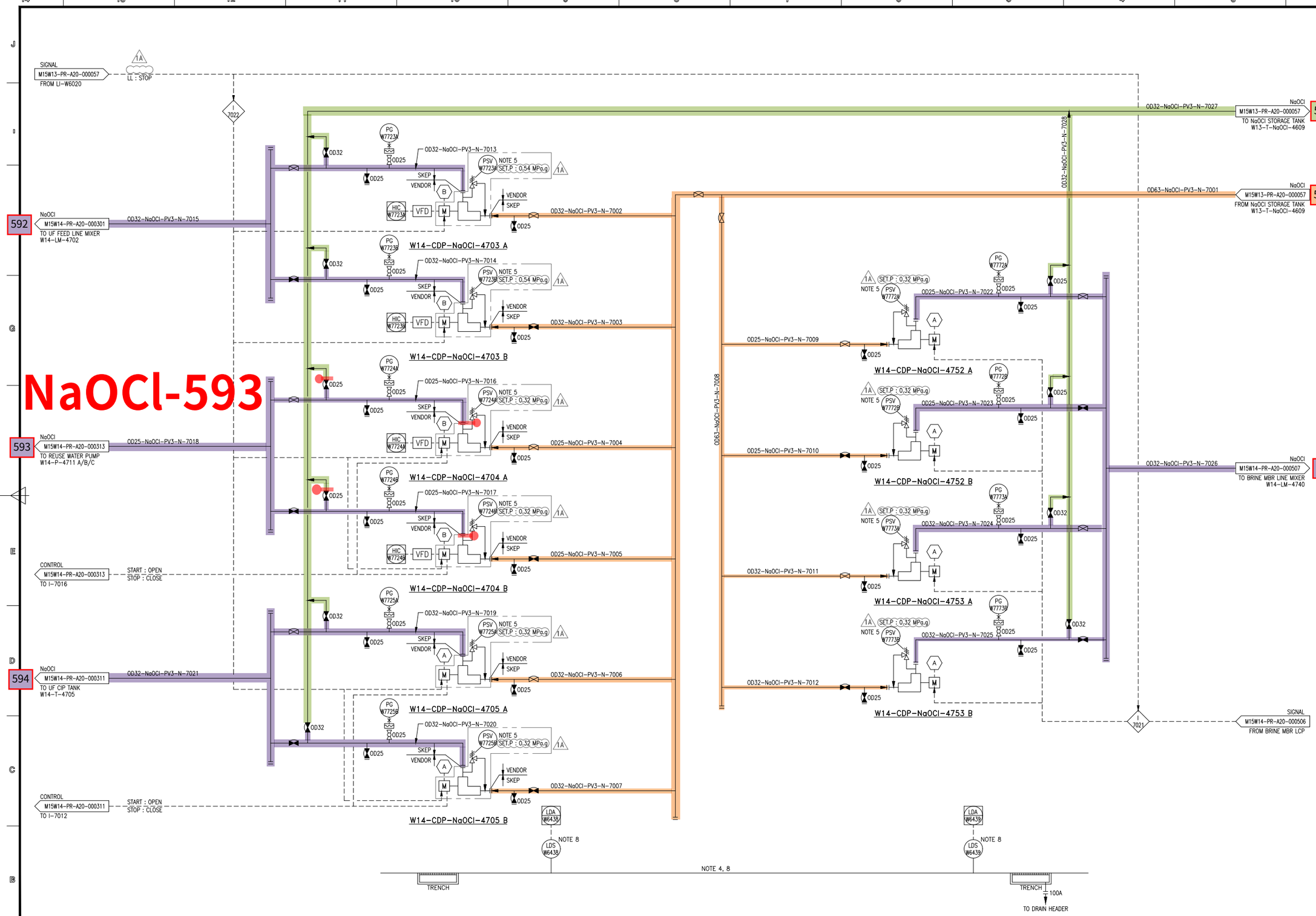

ITEM NO.	W14-CDP-NaOCl-4703 A/B
SERVICE	UF FEED WATER LINE MIXER NaOCl FEED PUMP
Q'TY	1 + 1
TYPE	DIAPHRAGM
CAPA. l/min.ea x MPa	(MAX 11.2 x MAX 0.7 NOTE 9)
MAT'L	PVDF/PTFE(+EPDM)/CERAMIC
POWER kW	0.75

ITEM NO.	W14-CDP-NaOCl-4704 A/B
SERVICE	RO TREATED WATER NaOCl FEED PUMP
Q'TY	1 + 1
TYPE	DIAPHRAGM
CAPA. l/min.ea x MPa	(MAX 4.1 x MAX 0.8 NOTE 10)
MAT'L	PVDF/PTFE(+EPDM)/CERAMIC
POWER kW	0.4

ITEM NO.	W14-CDP-NaOCl-4705 A/B
SERVICE	UF CIP TANK NaOCl FEED PUMP
Q'TY	1 + 1
TYPE	DIAPHRAGM
CAPA. l/min.ea x MPa	(MAX 11.2 x MAX 0.7 NOTE 11)
MAT'L	PVDF/PTFE(+EPDM)/CERAMIC
POWER kW	0.75

ITEM NO.	W14-CDP-NaOCl-4752 A/B
SERVICE	BRINE MBR LINE MIXER NaOCl FEED PUMP (MC)
Q'TY	1 + 1
TYPE	DIAPHRAGM
CAPA. l/min.ea x MPa	(MAX 1.04 x MAX 1 NOTE 12)
MAT'L	PVDF/PTFE/CERAMIC
POWER kW	0.55

ITEM NO.	W14-CDP-NaOCl-4753 A/B
SERVICE	BRINE MBR LINE MIXER NaOCl FEED PUMP (RC)
Q'TY	1 + 1
TYPE	DIAPHRAGM
CAPA. l/min.ea x MPa	(MAX 11.2 x MAX 0.7 NOTE 13)
MAT'L	PVDF/PTFE/CERAMIC
POWER kW	0.75

대외비

KEY PLAN (4F)

NOTE

1. 운전 시 CLOSE 되는 배관에는 LOTO 설치.
2. DIAPHRAGM PUMP MAT'L 표기 : HEAD / DIAPHRAGM / CHECK BALL
3. 약품종류에 따라 LINE 색상을 구분하여야 한다.
4. CHEMICAL ROOM 내 TRENCH & PIT DRAIN은 DRAIN HEADER를 통하여 근처의 안전한 수조로 유입된다.
5. PUMP VENDOR 공급.
6. INTERLOCK NO. I-7021 (W14-CDP-NaOCl-4752 A/B, W14-CDP-NaOCl-4753 A/B AUTO STOP) : REMOTE STATUS에서 W13-T-NaOCl-4609 LEVEL (LI-W6020) LOW LOW STOP. BRINE MBR CIP/BACK WASH 시 START/STOP.
7. INTERLOCK NO. I-7022 (W14-CDP-NaOCl-4703 A/B, W14-CDP-NaOCl-4704 A/B, W14-CDP-NaOCl-4705 A/B AUTO STOP) : REMOTE STATUS에서 W13-T-NaOCl-4609 LEVEL (LI-W6020) LOW LOW STOP.
8. REUSE SYSTEM 및 BRINE 처리 SYSTEM의 공급용 PUMP 주변의 LEAK DETECTOR는 기 공급됨. (LDS-W6438/W6439)
9. OPERATING CAPACITY : 5 LPM OPERATING PRESSURE : 0.49 MPa
10. OPERATING CAPACITY : 3 LPM OPERATING PRESSURE : 0.29 MPa
11. OPERATING CAPACITY : 8 LPM OPERATING PRESSURE : 0.29 MPa
12. OPERATING CAPACITY : 1 LPM OPERATING PRESSURE : 0.29 MPa
13. OPERATING CAPACITY : 10 LPM OPERATING PRESSURE : 0.29 MPa

REV.	DESCRIPTION	DATE
1A	REVISED AFC	25.08.14
1	REVISED AFC	25.01.17
0	APPROVAL FOR CONSTRUCTION	24.10.31

제 도 DRAWN BY	이 인 학
검 토 CHECKED BY	한 진 희
승 인 APPROVED BY	박 동 영
제 작 사	SK 에코플랜트
공 사 명 PROJECT TITLE	M15X Ph4 WWT Project
도면명 DWG. TITLE	PIPING & INSTRUMENT DIAGRAM NaOCl FEED PUMP
축 척 SCALE	NONE
날 짜 DATE	2025. 08. 14
PROJECT NO.	22330D
REV.	1A
도면번호 SHEET NO.	CJ-M15W14-PR-A20-000315

C:₩Users₩TOPWDesktop₩P&ID251013₩[M15X Ph-4 for 인허가]CAD FILE_0910₩CJ-M15W14-PR-A20-000315 R1 P&ID FOR NaOC

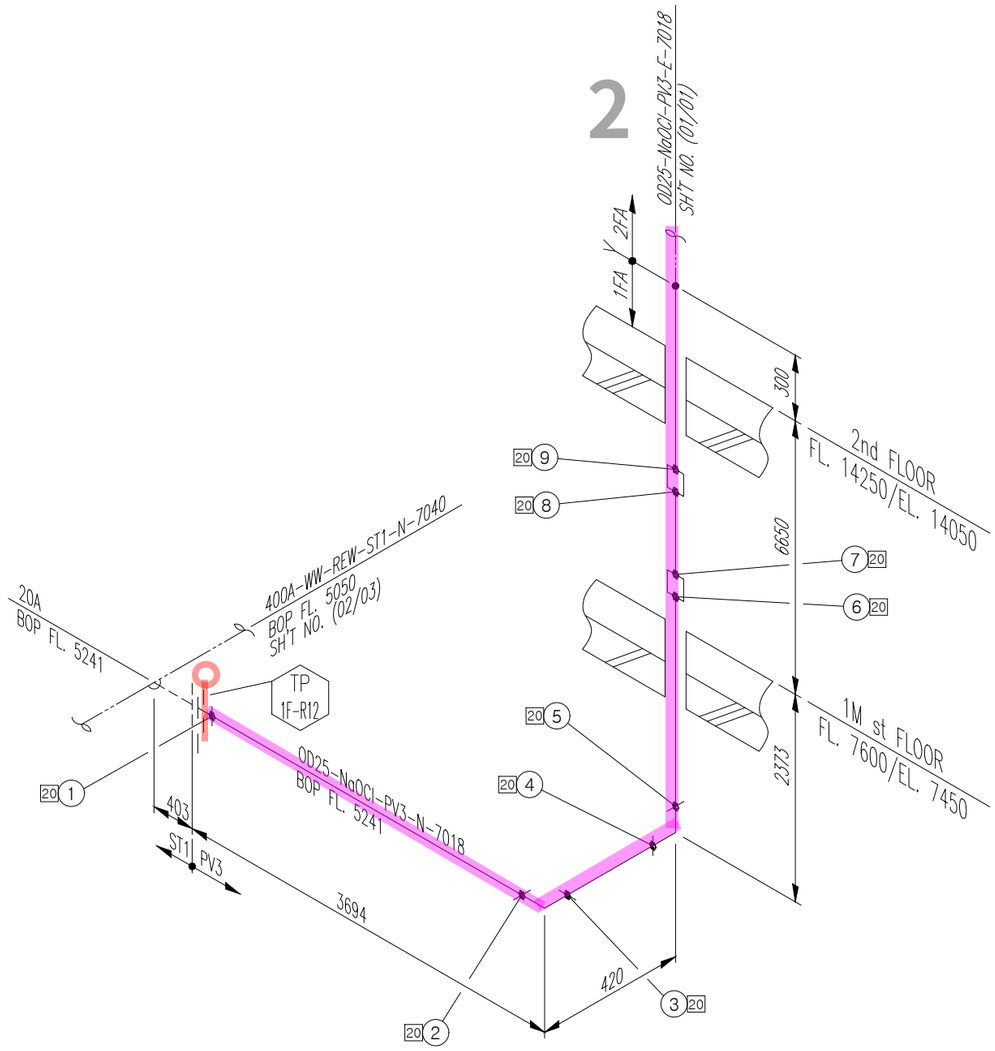

<NOTE>
1. (*) FIELD ADJUST

ITEM	SIZE	Q'TY	DESCRIPTION
		PV3	
P	OD25	13.4M	PIPE, CPVC, PE, SOCKET FUSION, SDR13.5
E90	OD25	2EA	ELBOW 90 DEG, CPVC, PE, SOCKET FUSION, SDR13.5
F	OD25	1EA	FLG, KS 10K, FF, STUB FLG CPVC /
			BACKING RING(PP)+INSERT(STEEL), SDR13.5
SC	OD25	2EA	SOCKET, CPVC, PE, SOCKET FUSION, SDR13.5

* PIPE : P/P1 * 90° ELBOW : E90 * 45° ELBOW : E45 * TEE : T * RED.TEE : TR * STUB-IN : STU * REINFORCING PAD : RP * CON.RED : RC * ECC.RED : RE * CON.SWAGE : RCS/RCS1 * ECC.SWAGE : RES/RES1 * NIPPLE : NP/NP1/NP2 * CAP : CAP/CAP1 * PLUG : PLG * FULL COUPLING : FC * HALF COUPLING : HF/HF1
* STUB-IN : STU * SOCKET(HDPE/PVC) : SC * SADDLE(HDPE) : SD * FLANGE : F/F1 * GASKET : G/G1/G2 * BOLT & NUT : B/B1 * BLIND FLANGE : FB/FB1 * GATE VA. : VG/VG1/VG2 * BALL VA. : VB/VBL0/VB1/VB1L0/VB2/VB2L0 * BUTTERFLY VA. : VF/VF4 * CHECK VA. : VC/VC1/VC2/VC3/VC4/VC5/VC6/VC7
* GLOBE VA. : VL/VL1/VL2 * DIAPHRAGM VA. : VD/VDL0 * DAMPER : VP * QUICK COUPLING : SQC * FLEXIBLE JOINT(STEEL) : FLXB * FLEXIBLE JOINT(RUBBER) : FLXR * FLEXIBLE JOINT(STEEL_PTFE LINED) : FLXL * FLEXIBLE HOSE : FLXH * STEAM TRAP : ST * SPRAY NOZZLE : SPN * EMERGENCY SHOWER : SSH
* STRAINER(Y-TYPE) : YSTR * STRAINER(T-TYPE) : TSTR * STRAINER(BUCKET-TYPE) : BSTR * ANCHOR PLATE : STOP * BIRD SCREEN : BS * ISOLATION KIT : IK * UNLOADING BOX : UB * AIR TRAP : AT * LOTO : LOTO * SIGHT GLASS : SG * PRESSURE GAUGE : PG * SHILED : SH * SPECIAL BOLT & NUT : BL/BL1

CLIENT SK hynix 1

INSULATION	CODE	N
	THICK.	–

CONDITION	PRESS. (kg/cm2g)	TEMP. (°C)
DESIGN	10	60
OPERATING	7.5	AMB

AREA W14
UNIT R1FA
REF. PLAN DWG. CJ-M15W14-PI-A30-010017-C
REF. P & ID CJ-M15W14-PR-A20-000313

REV. NO.	DATE	DESCRIPTION	BY	CHK	APP'D
0	25.01.24	APPROVED FOR CONSTRUCTION	황래종	안남후	박동영

CONTRACTOR SK ecoplant
PROJECT NAME M15X Ph4 Project
COMMODITY NaOCl
JOB NO. 22330D
LINE NO. 0D25-NaOCl-PV3-N-7018
SH'T NO. 01 / 01
REV. 0

경고 : 본 도면은 SK HYNIX의 기업비밀 자료로서, 어떠한 경우에도 목적 외 사용, 복제, 제3자에게 공개, 누설 및 유출할 수 없으며, 회사는 유포자의 불법 사용으로 피해가 발생할 경우 유포자에게 민/형사상 책임을 요구할 수 있음.

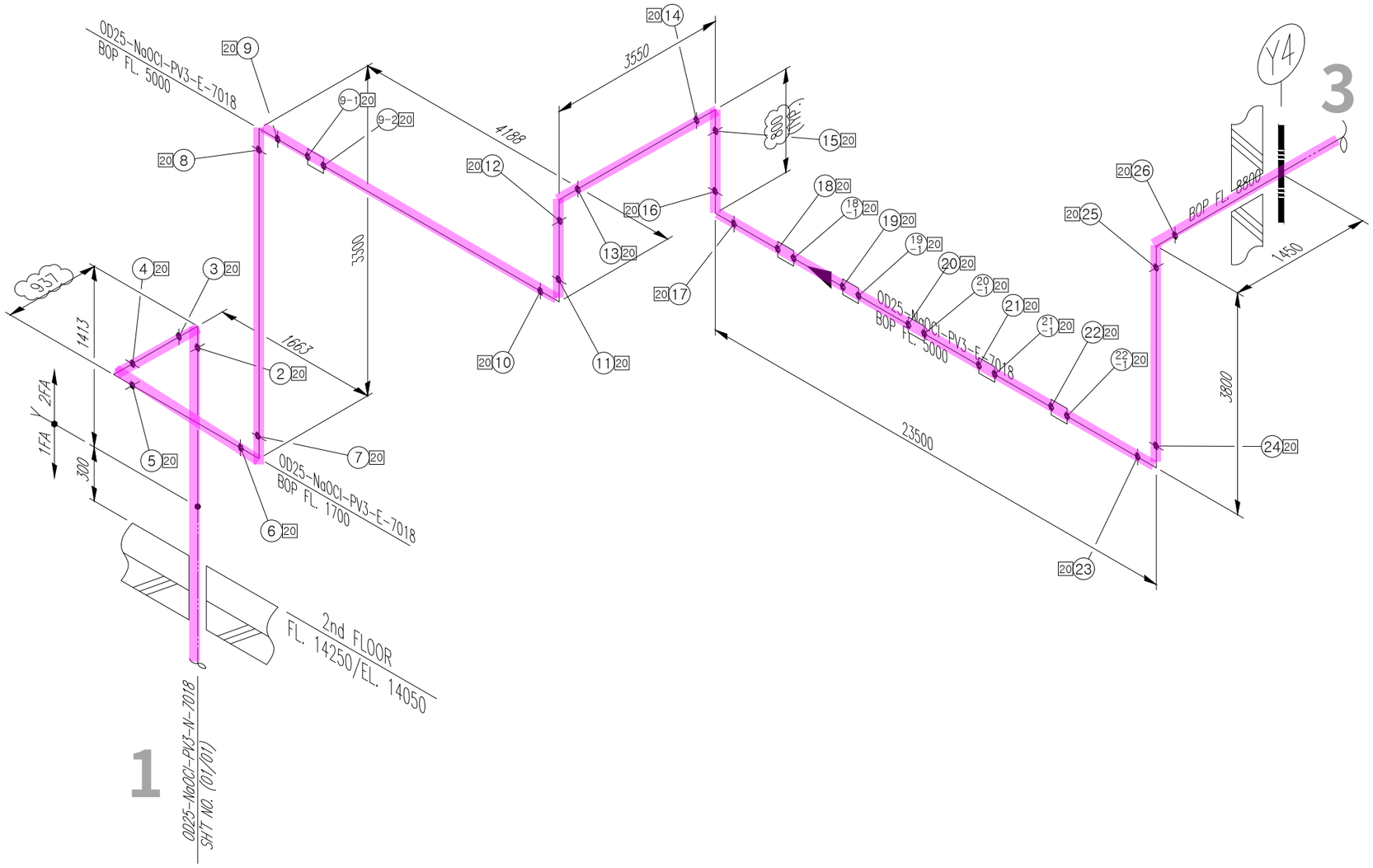

ITEM	SIZE	Q'TY	DESCRIPTION
		PV3	
P	OD25	44.6M	PIPE, CPVC, PE, SOCKET FUSION, SDR13.5
E90	OD25	10EA	ELBOW 90 DEG, CPVC, PE, SOCKET FUSION, SDR13.5
INC	25tXOD25	40.0M	관 보온재(고무발포) + 알루미늄 CASING
SC	OD25	6EA	SOCKET, CPVC, PE, SOCKET FUSION, SDR13.5

<NOTE>
1. TRAY & ANGLE,CHANNEL SUPPORT가 적용되는 배관 ELEVATION은 현장 맞춤으로 한다.
2. (*) FIELD ADJUST

* PIPE : P/P1 * 90° ELBOW : E90 * 45° ELBOW : E45 * TEE : T * RED.TEE : TR * STUB-IN : STU * REINFORCING PAD : RP * CON.RED : RC * ECC.RED : RE * CON.SWAGE : RCS/RCS1 * ECC.SWAGE : RES/RES1 * NIPPLE : NP/NP1/NP2 * CAP : CAP/CAP1 * PLUG : PLG * FULL COUPLING : FC * HALF COUPLING : HF/HF1
* STUB-IN : STU * SOCKET(HDPE/PVC) : SC * SADDLE(HDPE) : SD * FLANGE : F/F1 * GASKET : G/G1/G2 * BOLT & NUT : B/B1 * BLIND FLANGE : FB/FB1 * GATE VA. : VG/VG1/VG2 * BALL VA. : VB/VBLO/VB1/VB1LO/VB2/VB2LO * BUTTERFLY VA. : VF/VF4 * CHECK VA. : VC/VC1/VC2/VC3/VC4/VC5/VC6/VC7
* GLOBE VA. : VL/VL1/VL2 * DIAPHRAGM VA. : VD/VDLO * DAMPER : VP * QUICK COUPLING : SQC * FLEXIBLE JOINT(STEEL) : FLXB * FLEXIBLE JOINT(RUBBER) : FLXR * FLEXIBLE JOINT(STEEL_PTFE LINED) : FLXL * FLEXIBLE HOSE : FLXH * STEAM TRAP : ST * SPRAY NOZZLE : SPN * EMERGENCY SHOWER : SSH
* STRAINER(Y-TYPE) : YSTR * STRAINER(T-TYPE) : TSTR * STRAINER(BUCKET-TYPE) : BSTR * ANCHOR PLATE : STOP * BIRD SCREEN : BS * ISOLATION KIT : IK * UNLOADING BOX : UB * AIR TRAP : AT * LOTO : LOTO * SIGHT GLASS : SG * PRESSURE GAUGE : PG * SHILED : SH * SPECIAL BOLT & NUT : BL/BL1

CLIENT SK hynix 2

INSULATION	CODE	E	CONDITION	PRESS. (kg/cm2g)	TEMP. (°C)
	THICK.	25	DESIGN	10	60
			OPERATING	7.5	AMB

AREA W14
UNIT R2FA
REF. PLAN DWG. CJ-M15W14-PI-A30-020016-C
REF. P & ID CJ-M15W14-PR-A20-000313

REV. NO.	DATE	DESCRIPTION	BY	CHK	APP'D
1	25.03.31	REVISED AS MARKED	황래종	안남후	박동영
0	25.01.24	APPROVED FOR CONSTRUCTION	황래종	안남후	박동영

CONTRACTOR SK ecoplant
PROJECT NAME M15X Ph4 Project
COMMODITY NaOCl
JOB NO. 22330D
LINE NO. OD25-NaOCl-PV3-E-7018
SH'T NO. 01 / 01
REV. 1

경고 : 본 도면은 SK HYNIX의 기업비밀 자료로서, 어떠한 경우에도 목적 외 사용, 복제, 제3자에게 공개, 누설 및 유출할 수 없으며, 회사는 유포자의 불법 사용으로 피해가 발생할 경우 유포자에게 민/형사상 책임을 요구할 수 있음.

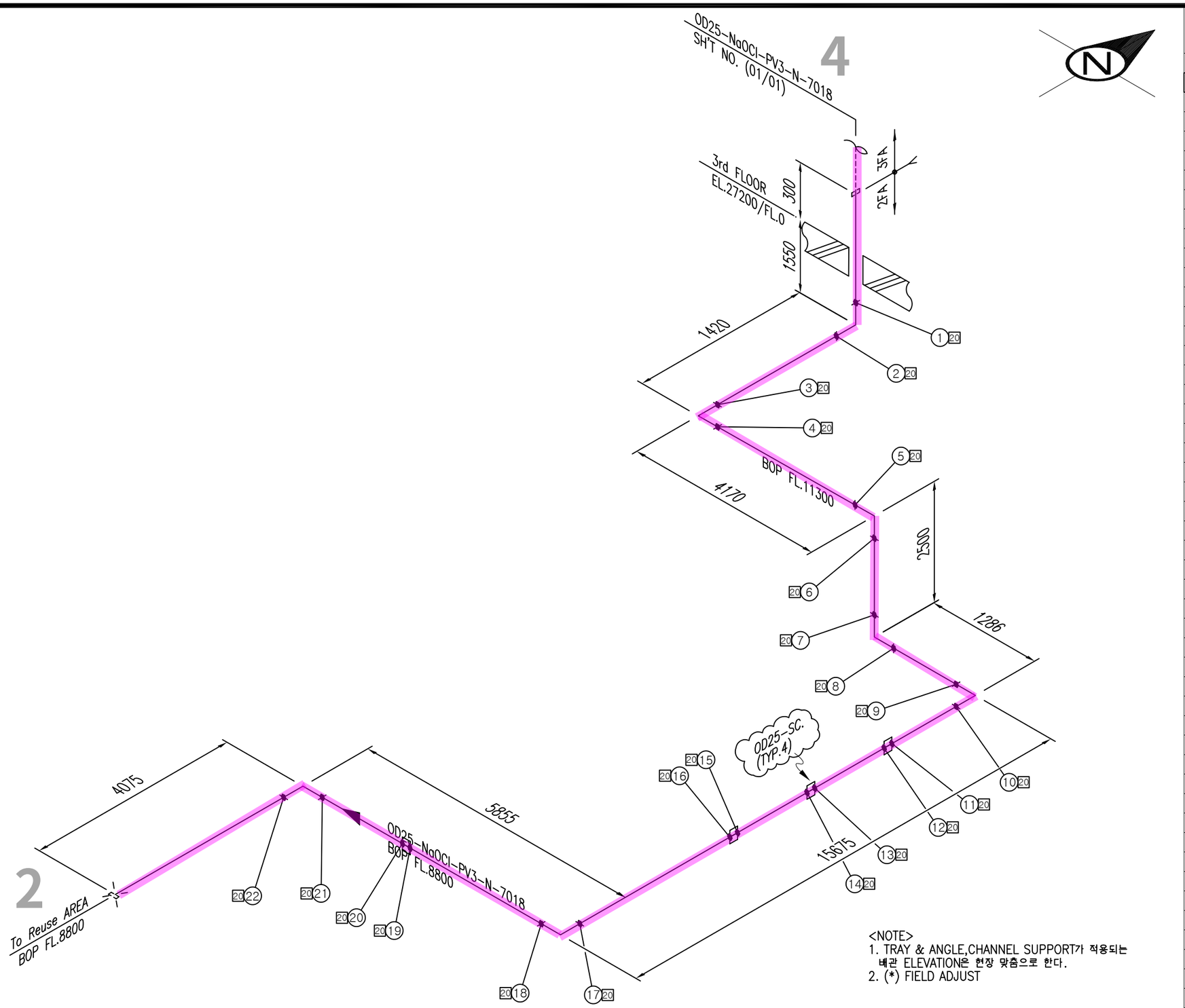

<NOTE>
1. TRAY & ANGLE,CHANNEL SUPPORT가 적용되는 배관 ELEVATION은 현장 맞춤으로 한다.
2. (*) FIELD ADJUST

SK ecoplant

ITEM	SIZE	Q'TY	DESCRIPTION
PV3			
P	OD25	36.8M	PIPE, CPVC, PE, SOCKET FUSION, SDR13.5
E90	OD25	7EA	ELBOW 90 DEG, CPVC, PE, SOCKET FUSION, SDR13.5
SC	OD25	4EA	SOCKET, CPVC, PE, SOCKET FUSION, SDR13.5

* PIPE : P/P1 * 90° ELBOW : E90 * 45° ELBOW : E45 * TEE : T * RED.TEE : TR * STUB-IN : STU * REINFORCING PAD : RP * CON.RED : RC * ECC.RED : RE * CON.SWAGE : RCS/RCS1 * ECC.SWAGE : RES/RES1 * NIPPLE : NP/NP1/NP2 * CAP : CAP/CAP1 * PLUG : PLG * FULL COUPLING : FC * HALF COUPLING : HF/HF1
* STUB-IN : STU * SOCKET(HDPE/PVC) : SC * SADDLE(HDPE) : SD * FLANGE : F/F1 * GASKET : G/G1/G2 * BOLT & NUT : B/B1 * BLIND FLANGE : FB/FB1 * GATE VA. : VG/VG1/VG2 * BALL VA. : VB/VBLO/VB1/VB1LO/VB2/VB2LO * BUTTERFLY VA. : VF/VF4 * CHECK VA. : VC/VC1/VC2/VC3/VC4/VC5/VC6/VC7
* GLOBE VA. : VL/VL1/VL2 * DIAPHRAGM VA. : VD/VDLO * DAMPER : VP * QUICK COUPLING : SQC * FLEXIBLE JOINT(STEEL) : FLXB * FLEXIBLE JOINT(RUBBER) : FLXR * FLEXIBLE JOINT(STEEL_PTFE LINED) : FLXL * FLEXIBLE HOSE : FLXH * STEAM TRAP : ST * SPRAY NOZZLE : SPN * EMERGENCY SHOWER : SSH
* STRAINER(Y-TYPE) : YSTR * STRAINER(T-TYPE) : TSTR * STRAINER(BUCKET-TYPE) : BSTR * ANCHOR PLATE : STOP * BIRD SCREEN : BS * ISOLATION KIT : IK * UNLOADING BOX : UB * AIR TRAP : AT * LOTO : LOTO * SIGHT GLASS : SG * PRESSURE GAUGE : PG * SHILED : SH * SPECIAL BOLT & NUT : BL/BL1

CLIENT
SK hynix
3

INSULATION	CODE	N	CONDITION	PRESS. (kg/cm2g)	TEMP. (°C)
	THICK.	–	DESIGN	1	60
			OPERATING	ATM	AMB

AREA W14
UNIT 2FA
REF. PLAN DWG. CJ-M15W14-PI-A30-020011-H
REF. P & ID CJ-M15W14-PR-A20-000315

REV. NO.	DATE	DESCRIPTION	BY	CHK	APP'D
0	24.12.20	APPROVED FOR CONSTRUCTION	황래종	안남후	박동영

CONTRACTOR SK ecoplant
PROJECT NAME M15X Ph4 Project
COMMODITY NaOCl
JOB NO. 22330D
LINE NO. OD25-NaOCl-PV3-N-7018
SH'T NO. 01 / 01
REV. 0

경고 : 본 도면은 SK HYNIX의 기업비밀 자료로서, 어떠한 경우에도 목적 외 사용, 복제, 제3자에게 공개, 누설 및 유출할 수 없으며, 회사는 유포자의 불법 사용으로 피해가 발생할 경우 유포자에게 민/형사상 책임을 요구할 수 있음.

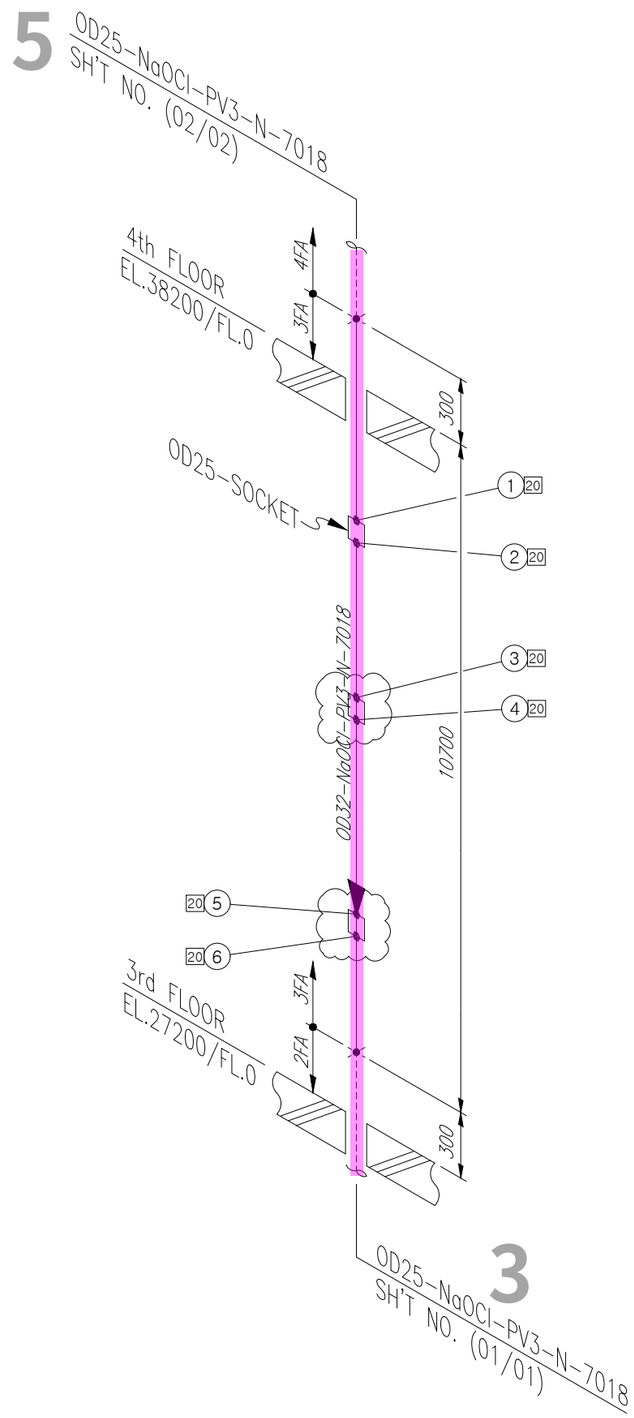

<NOTE>
1. (*) FIELD ADJUST

ITEM	SIZE	Q'TY	DESCRIPTION
		PV3	
P	OD25	11.0M	PIPE, CPVC, PE, SOCKET FUSION, SDR13.5
SC	OD25	3EA	SOCKET, CPVC, PE, SOCKET FUSION, SDR13.5

* PIPE : P/P1 * 90° ELBOW : E90 * 45° ELBOW : E45 * TEE : T * RED.TEE : TR * STUB-IN : STU * REINFORCING PAD : RP * CON.RED : RC * ECC.RED : RE * CON.SWAGE : RCS/RCS1 * ECC.SWAGE : RES/RES1 * NIPPLE : NP/NP1/NP2 * CAP : CAP/CAP1 * PLUG : PLG * FULL COUPLING : FC * HALF COUPLING : HF/HF1
* STUB-IN : STU * SOCKET(HDPE/PVC) : SC * SADDLE(HDPE) : SD * FLANGE : F/F1 * GASKET : G/G1/G2 * BOLT & NUT : B/B1 * BLIND FLANGE : FB/FB1 * GATE VA. : VG/VG1/VG2 * BALL VA. : VB/VBL0/VB1/VB1L0/VB2/VB2L0 * BUTTERFLY VA. : VF/VF4 * CHECK VA. : VC/VC1/VC2/VC3/VC4/VC5/VC6/VC7
* GLOBE VA. : VL/VL1/VL2 * DIAPHRAGM VA. : VD/VDL0 * DAMPER : VP * QUICK COUPLING : SQC * FLEXIBLE JOINT(STEEL) : FLXB * FLEXIBLE JOINT(RUBBER) : FLXR * FLEXIBLE JOINT(STEEL_PTFE LINED) : FLXL * FLEXIBLE HOSE : FLXH * STEAM TRAP : ST * SPRAY NOZZLE : SPN * EMERGENCY SHOWER : SSH
* STRAINER(Y-TYPE) : YSTR * STRAINER(T-TYPE) : TSTR * STRAINER(BUCKET-TYPE) : BSTR * ANCHOR PLATE : STOP * BIRD SCREEN : BS * ISOLATION KIT : IK * UNLOADING BOX : UB * AIR TRAP : AT * LOTO : LOTO * SIGHT GLASS : SG * PRESSURE GAUGE : PG * SHILED : SH * SPECIAL BOLT & NUT : BL/BL1

CLIENT SK hynix 4

INSULATION	CODE	N	CONDITION	PRESS. (kg/cm2g)	TEMP. (°C)
	THICK.	–	DESIGN	3.3	60
			OPERATING	3.0	AMB

AREA W14
UNIT 3FA
REF. PLAN DWG. CJ-M15W14-PI-A30-030006-A
REF. P & ID CJ-M15W14-PR-A20-000315

REV. NO.	DATE	DESCRIPTION	BY	CHK	APP'D
0	25.01.24	APPROVED FOR CONSTRUCTION	황래종	안남후	박동영

CONTRACTOR SK ecoplant
PROJECT NAME M15X Ph4 Project
COMMODITY NaOCl
JOB NO. 22330D
LINE NO. OD25-NaCOl-PV3-N-7018
SH'T NO. 01 / 01
REV. 0

경고 : 본 도면은 SK HYNIX의 기업비밀 자료로서, 어떠한 경우에도 목적 외 사용, 복제, 제3자에게 공개, 누설 및 유출할 수 없으며, 회사는 유포자의 불법 사용으로 피해가 발생할 경우 유포자에게 민/형사상 책임을 요구할 수 있음.

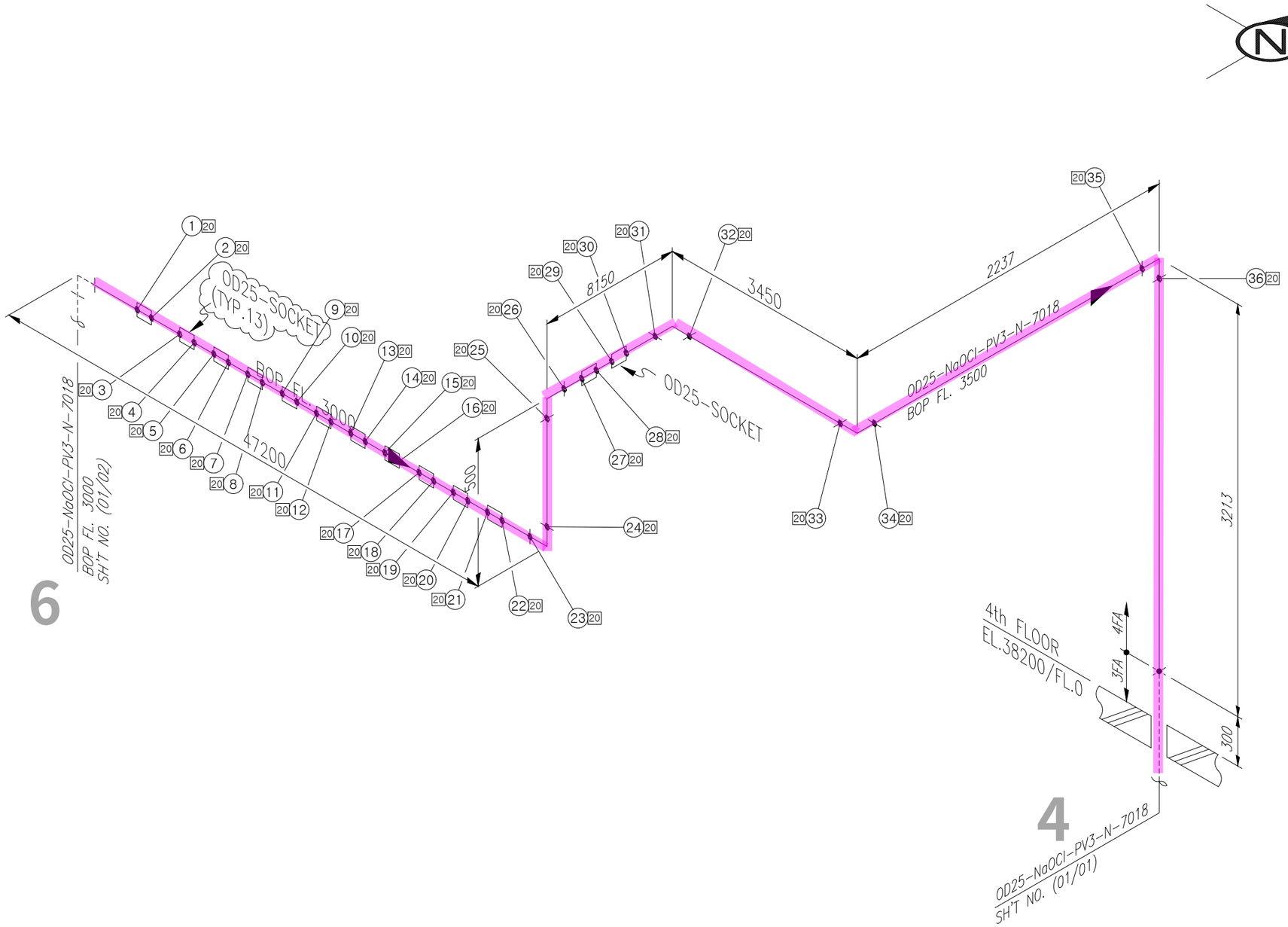

ITEM	SIZE	Q'TY	DESCRIPTION
		PV3	
P	OD25	64.8M	PIPE, CPVC, PE, SOCKET FUSION, SDR13.5
E90	OD25	5EA	ELBOW 90 DEG, CPVC, PE, SOCKET FUSION, SDR13.5
SC	OD25	13EA	SOCKET, CPVC, PE, SOCKET FUSION, SDR13.5

<NOTE>
1. TRAY & ANGLE,CHANNEL SUPPORT가 적용되는 배관 ELEVATION은 현장 맞춤으로 한다.
2. (*) FIELD ADJUST

* PIPE : P/P1 * 90° ELBOW : E90 * 45° ELBOW : E45 * TEE : T * RED.TEE : TR * STUB-IN : STU * REINFORCING PAD : RP * CON.RED : RC * ECC.RED : RE * CON.SWAGE : RCS/RCS1 * ECC.SWAGE : RES/RES1 * NIPPLE : NP/NP1/NP2 * CAP : CAP/CAP1 * PLUG : PLG * FULL COUPLING : FC * HALF COUPLING : HF/HF1
* STUB-IN : STU * SOCKET(HDPE/PVC) : SC * SADDLE(HDPE) : SD * FLANGE : F/F1 * GASKET : G/G1/G2 * BOLT & NUT : B/B1 * BLIND FLANGE : FB/FB1 * GATE VA. : VG/VG1/VG2 * BALL VA. : VB/VBLO/VB1/VB1LO/VB2/VB2LO * BUTTERFLY VA. : VF/VF4 * CHECK VA. : VC/VC1/VC2/VC3/VC4/VC5/VC6/VC7
* GLOBE VA. : VL/VL1/VL2 * DIAPHRAGM VA. : VD/VDLO * DAMPER : VP * QUICK COUPLING : SQC * FLEXIBLE JOINT(STEEL) : FLXB * FLEXIBLE JOINT(RUBBER) : FLXR * FLEXIBLE JOINT(STEEL_PTFE LINED) : FLXL * FLEXIBLE HOSE : FLXH * STEAM TRAP : ST * SPRAY NOZZLE : SPN * EMERGENCY SHOWER : SSH
* STRAINER(Y-TYPE) : YSTR * STRAINER(T-TYPE) : TSTR * STRAINER(BUCKET-TYPE) : BSTR * ANCHOR PLATE : STOP * BIRD SCREEN : BS * ISOLATION KIT : IK * UNLOADING BOX : UB * AIR TRAP : AT * LOTO : LOTO * SIGHT GLASS : SG * PRESSURE GAUGE : PG * SHILED : SH * SPECIAL BOLT & NUT : BL/BL1

CLIENT SK hynix 5

INSULATION	CODE	N	CONDITION	PRESS. (kg/cm2g)	TEMP. (°C)
	THICK.	–	DESIGN	3.3	60
			OPERATING	3.0	AMB

AREA W14
UNIT 4FA
REF. PLAN DWG. CJ-M15W14-PI-A30-040010-B
REF. P & ID CJ-M15W14-PR-A20-000315

REV. NO.	DATE	DESCRIPTION	BY	CHK	APP'D
0	25.01.24	APPROVED FOR CONSTRUCTION	황래종	안남후	박동영

CONTRACTOR SK ecoplant
PROJECT NAME M15X Ph4 Project
COMMODITY NaOCl
JOB NO. 22330D
LINE NO. OD25-NaOCl-PV3-N-7018
SH'T NO. 02 / 02
REV. 0

경고 : 본 도면은 SK HYNIX의 기업비밀 자료로서, 어떠한 경우에도 목적 외 사용, 복제, 제3자에게 공개, 누설 및 유출할 수 없으며, 회사는 유포자의 불법 사용으로 피해가 발생할 경우 유포자에게 민/형사상 책임을 요구할 수 있음.

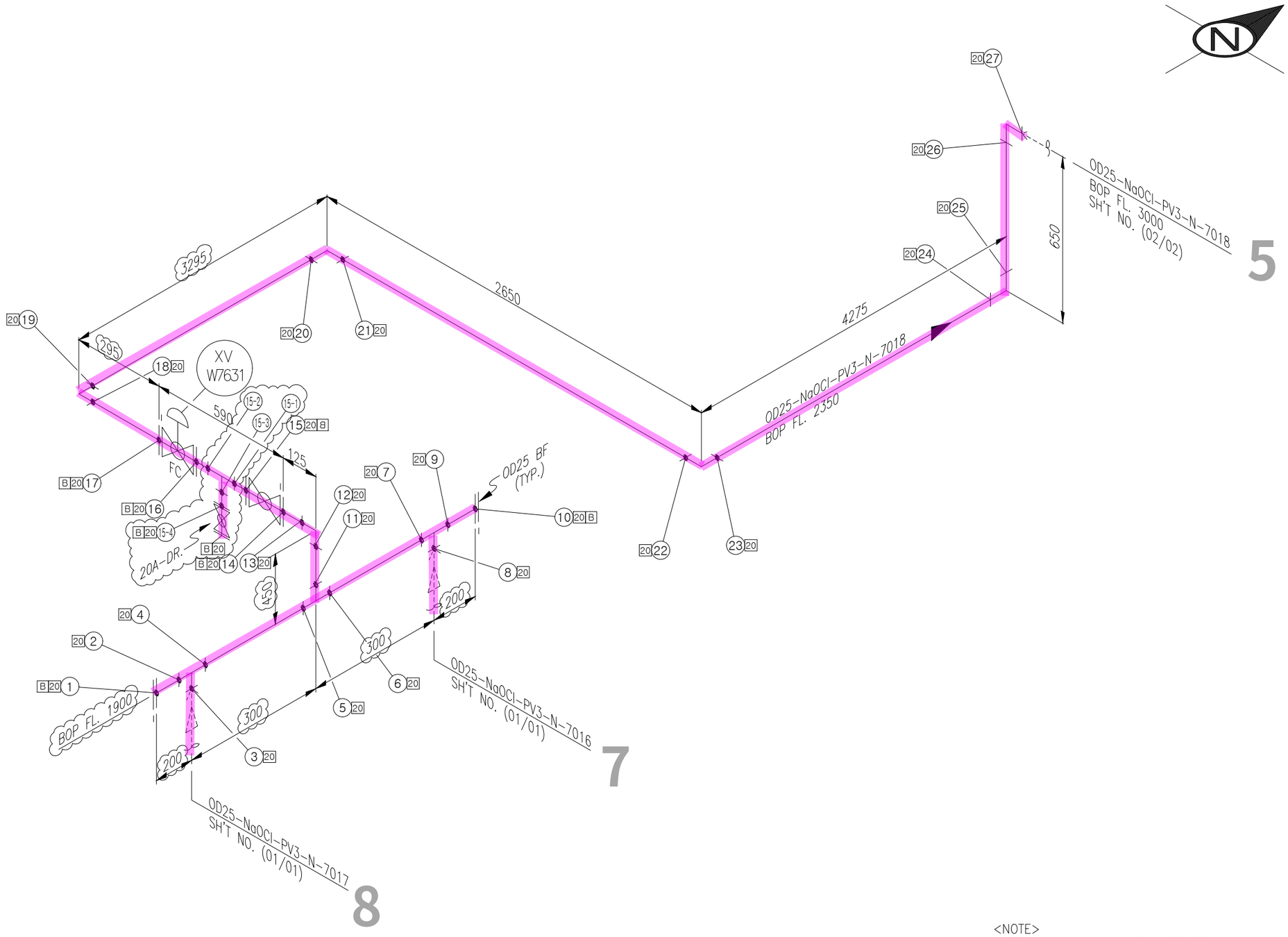

ITEM	SIZE	Q'TY	DESCRIPTION
		PV3	
P	OD25	13.3M	PIPE, CPVC, PE, SOCKET FUSION, SDR13.5
E90	OD25	6EA	ELBOW 90 DEG, CPVC, PE, SOCKET FUSION, SDR13.5
T	OD25	4EA	TEE EQUAL, CPVC, PE, SOCKET FUSION, SDR13.5
F	OD25	7EA	FLG, KS 10K, FF, STUB FLG CPVC /
			BACKING RING(PP)+INSERT(STEEL), SDR13.5
FB	OD25	3EA	FLG BLIND, KS 10K, FF, CPVC, SDR13.5
G	OD25	8EA	GASKET, KS 10K, FF, PTFE+EPDM, 3.0MM TH'K
B	OD25	8SET	MACHINE BOLT & NYLON NUT :STS 304 / W WASHERS
VB	OD25	2EA	BALL VALVE, KS 10K, FF FLG'D, BODY-CPVC /
			TRIM-CPVC / SEAT-FPR, FB, LEVER
SH	OD25	8EA	SHIELD

<NOTE>
1. TRAY & ANGLE,CHANNEL SUPPORT가 적용되는 배관 ELEVATION은 현장 맞춤으로 한다.
2. (*) FIELD ADJUST

* PIPE : P/P1 * 90° ELBOW : E90 * 45° ELBOW : E45 * TEE : T * RED.TEE : TR * STUB-IN : STU * REINFORCING PAD : RP * CON.RED : RC * ECC.RED : RE * CON.SWAGE : RCS/RCS1 * ECC.SWAGE : RES/RES1 * NIPPLE : NP/NP1/NP2 * CAP : CAP/CAP1 * PLUG : PLG * FULL COUPLING : FC * HALF COUPLING : HF/HF1
* STUB-IN : STU * SOCKET(HDPE/PVC) : SC * SADDLE(HDPE) : SD * FLANGE : F/F1 * GASKET : G/G1/G2 * BOLT & NUT : B/B1 * BLIND FLANGE : FB/FB1 * GATE VA. : VG/VG1/VG2 * BALL VA. : VB/VBLO/VB1/VB1LO/VB2/VB2LO * BUTTERFLY VA. : VF/VF4 * CHECK VA. : VC/VC1/VC2/VC3/VC4/VC5/VC6/VC7
* GLOBE VA. : VL/VL1/VL2 * DIAPHRAGM VA. : VD/VDLO * DAMPER : VP * QUICK COUPLING : SQC * FLEXIBLE JOINT(STEEL) : FLXB * FLEXIBLE JOINT(RUBBER) : FLXR * FLEXIBLE JOINT(STEEL_PTFE LINED) : FLXL * FLEXIBLE HOSE : FLXH * STEAM TRAP : ST * SPRAY NOZZLE : SPN * EMERGENCY SHOWER : SSH
* STRAINER(Y-TYPE) : YSTR * STRAINER(T-TYPE) : TSTR * STRAINER(BUCKET-TYPE) : BSTR * ANCHOR PLATE : STOP * BIRD SCREEN : BS * ISOLATION KIT : IK * UNLOADING BOX : UB * AIR TRAP : AT * LOTO : LOTO * SIGHT GLASS : SG * PRESSURE GAUGE : PG * SHILED : SH * SPECIAL BOLT & NUT : BL/BL1

CLIENT SK hynix 6

INSULATION	CODE	N	CONDITION	PRESS. (kg/cm2g)	TEMP. (°C)
	THICK.	-	DESIGN	3.3	60
			OPERATING	3.0	AMB

AREA W14
UNIT 4FA
REF. PLAN DWG. CJ-M15W14-PI-A30-040010-A
REF. P & ID CJ-M15W14-PR-A20-000315

REV. NO.	DATE	DESCRIPTION	BY	CHK	APP'D
1	25.03.31	REVISED AS MARKED	황래종	안남후	박동영
0	25.01.24	APPROVED FOR CONSTRUCTION	황래종	안남후	박동영

CONTRACTOR SK ecoplant
PROJECT NAME M15X Ph4 Project
COMMODITY NaOCl
JOB NO. 22330D
LINE NO. 0D25-NaOCl-PV3-N-7018
SH'T NO. 01 / 02
REV. 1

경고 : 본 도면은 SK HYNIX의 기업비밀 자료로서, 어떠한 경우에도 목적 외 사용, 복제, 제3자에게 공개, 누설 및 유출할 수 없으며, 회사는 유포자의 불법 사용으로 피해가 발생할 경우 유포자에게 민/형사상 책임을 요구할 수 있음.

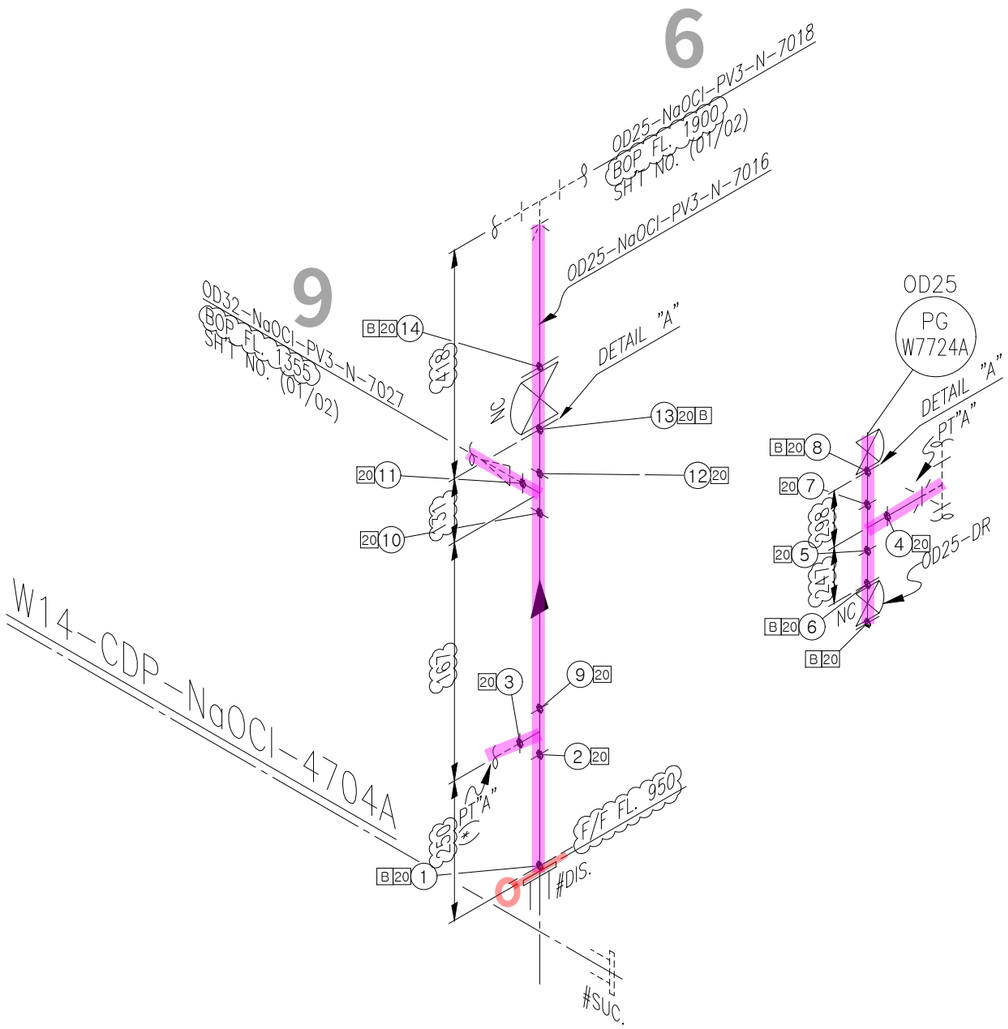

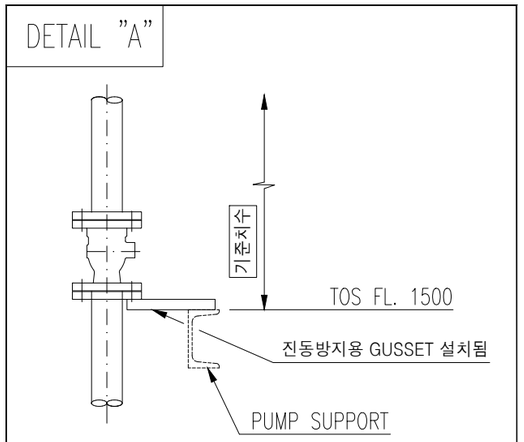

도면상의 치수는 상기 GUSSET 하부면 기준치수이니 참조할것.

<NOTE>
1. TRAY & ANGLE,CHANNEL SUPPORT가 적용되는 배관 ELEVATION은 현장 맞춤으로 한다.
2. (*) FIELD ADJUST

SK ecoplant

ITEM	SIZE	Q'TY	DESCRIPTION
		PV3	
P	OD32	1.3M	PIPE, CPVC, PE, SOCKET FUSION, SDR13.5
T	OD25	3EA	TEE EQUAL, CPVC, PE, SOCKET FUSION, SDR13.5
F	OD25	5EA	FLG, KS 10K, FF, STUB FLG CPVC /
			BACKING RING(PP)+INSERT(STEEL), SDR13.5
FB	OD25	1EA	FLG BLIND, KS 10K, FF, CPVC, SDR13.5
G	OD25	6EA	GASKET, KS 10K, FF, PTFE+EPDM, 3.0MM TH'K
B	OD25	6SET	MACHINE BOLT & NYLON NUT :STS 304 / W WASHERS
VD	OD25	3EA	DIAPHRAGM VALVE, KS 10K, FF FLG'D, BODY-CPVC /
			TRIM-PDDM, BB, HW
SH	OD25	6EA	SHIELD
LOTO	OD25	1EA	LOTO
PG	OD25	1EA	PRESSURE GAUGE, KS 10K, FF

* PIPE : P/P1 * 90° ELBOW : E90 * 45° ELBOW : E45 * TEE : T * RED.TEE : TR * STUB-IN : STU * REINFORCING PAD : RP * CON.RED : RC * ECC.RED : RE * CON.SWAGE : RCS/RCS1 * ECC.SWAGE : RES/RES1 * NIPPLE : NP/NP1/NP2 * CAP : CAP/CAP1 * PLUG : PLG * FULL COUPLING : FC * HALF COUPLING : HF/HF1
* STUB-IN : STU * SOCKET(HDPE/PVC) : SC * SADDLE(HDPE) : SD * FLANGE : F/F1 * GASKET : G/G1/G2 * BOLT & NUT : B/B1 * BLIND FLANGE : FB/FB1 * GATE VA. : VG/VG1/VG2 * BALL VA. : VB/VBL0/VB1/VB1L0/VB2/VB2L0 * BUTTERFLY VA. : VF/VF4 * CHECK VA. : VC/VC1/VC2/VC3/VC4/VC5/VC6/VC7
* GLOBE VA. : VL/VL1/VL2 * DIAPHRAGM VA. : VD/VDL0 * DAMPER : VP * QUICK COUPLING : SQC * FLEXIBLE JOINT(STEEL) : FLXB * FLEXIBLE JOINT(RUBBER) : FLXR * FLEXIBLE JOINT(STEEL_PTFE LINED) : FLXL * FLEXIBLE HOSE : FLXH * STEAM TRAP : ST * SPRAY NOZZLE : SPN * EMERGENCY SHOWER : SSH
* STRAINER(Y-TYPE) : YSTR * STRAINER(T-TYPE) : TSTR * STRAINER(BUCKET-TYPE) : BSTR * ANCHOR PLATE : STOP * BIRD SCREEN : BS * ISOLATION KIT : IK * UNLOADING BOX : UB * AIR TRAP : AT * LOTO : LOTO * SIGHT GLASS : SG * PRESSURE GAUGE : PG * SHILED : SH * SPECIAL BOLT & NUT : BL/BL1

CLIENT SK hynix 7

INSULATION	CODE	N
	THICK.	–

CONDITION	PRESS. (kg/cm2g)	TEMP. (°C)
DESIGN	3.3	60
OPERATING	3.0	AMB

AREA W14
UNIT 4FA
REF. PLAN DWG. CJ-M15W14-PI-A30-040010-A
REF. P & ID CJ-M15W14-PR-A20-000315

REV. NO.	DATE	DESCRIPTION	BY	CHK	APP'D
0	25.01.24	APPROVED FOR CONSTRUCTION	황래종	안남후	박동영

CONTRACTOR SK ecoplant
PROJECT NAME M15X Ph4 Project
COMMODITY NaOCl
JOB NO. 22330D
LINE NO. OD25-NaOCl-PV3-N-7016
SH'T NO. 01 / 01
REV. 0

경고 : 본 도면은 SK HYNIX의 기업비밀 자료로서, 어떠한 경우에도 목적 외 사용, 복제, 제3자에게 공개, 누설 및 유출할 수 없으며, 회사는 유포자의 불법 사용으로 피해가 발생할 경우 유포자에게 민/형사상 책임을 요구할 수 있음.

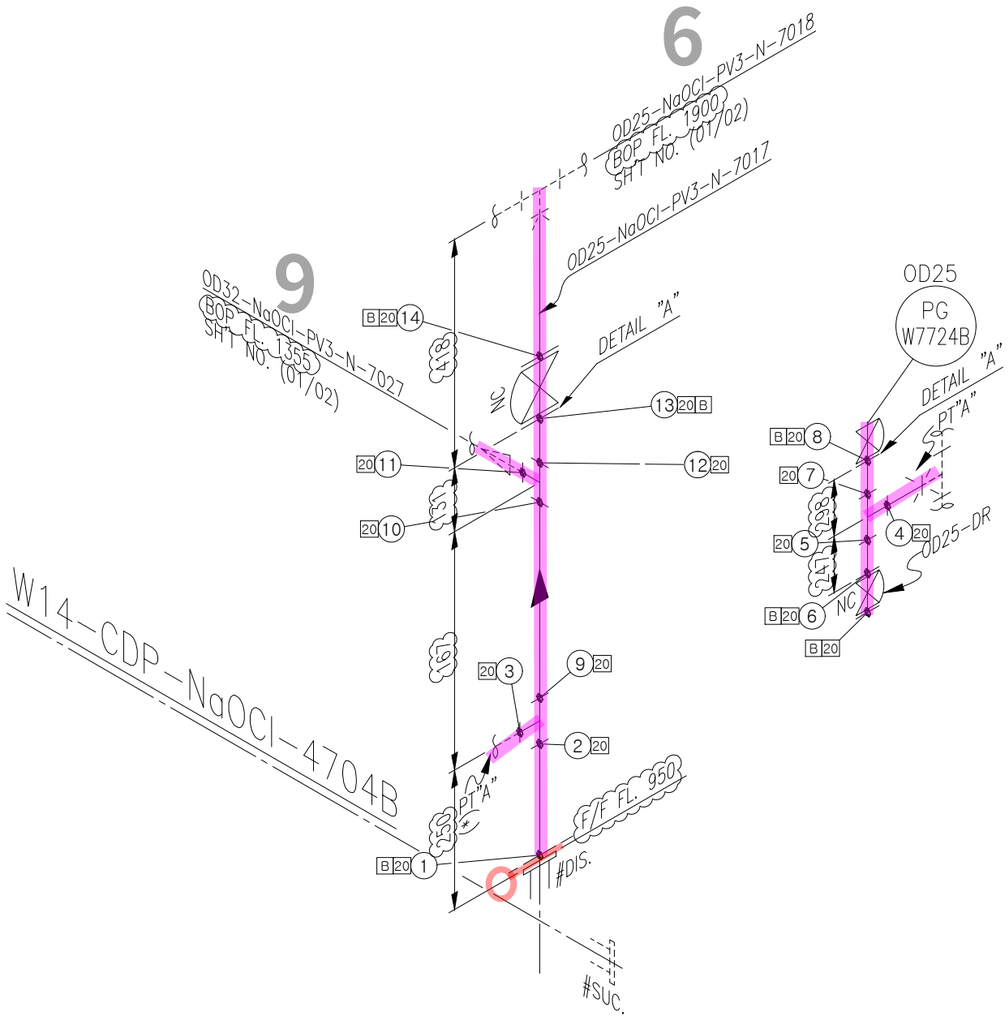

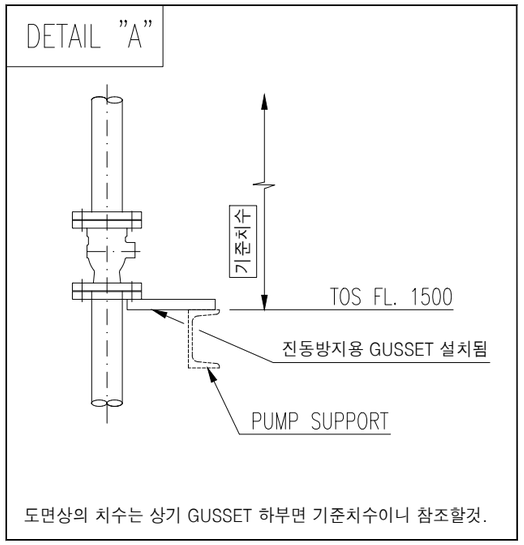

<NOTE>
1. TRAY & ANGLE,CHANNEL SUPPORT가 적용되는 배관 ELEVATION은 현장 맞춤으로 한다.
2. (*) FIELD ADJUST

SK ecoplant

ITEM	SIZE	Q'TY	DESCRIPTION
		PV3	
P	OD32	1.3M	PIPE, CPVC, PE, SOCKET FUSION, SDR13.5
T	OD25	3EA	TEE EQUAL, CPVC, PE, SOCKET FUSION, SDR13.5
F	OD25	5EA	FLG, KS 10K, FF, STUB FLG CPVC /
			BACKING RING(PP)+INSERT(STEEL), SDR13.5
FB	OD25	1EA	FLG BLIND, KS 10K, FF, CPVC, SDR13.5
G	OD25	6EA	GASKET, KS 10K, FF, PTFE+EPDM, 3.0MM TH'K
B	OD25	6SET	MACHINE BOLT & NYLON NUT :STS 304 / W WASHERS
VD	OD25	3EA	DIAPHRAGM VALVE, KS 10K, FF FLG'D, BODY-CPVC /
			TRIM-PDDM, BB, HW
SH	OD25	6EA	SHIELD
LOTO	OD25	2EA	LOTO
PG	OD25	1EA	PRESSURE GAUGE, KS 10K, FF

* PIPE : P/P1 * 90° ELBOW : E90 * 45° ELBOW : E45 * TEE : T * RED.TEE : TR * STUB-IN : STU * REINFORCING PAD : RP * CON.RED : RC * ECC.RED : RE * CON.SWAGE : RCS/RCS1 * ECC.SWAGE : RES/RES1 * NIPPLE : NP/NP1/NP2 * CAP : CAP/CAP1 * PLUG : PLG * FULL COUPLING : FC * HALF COUPLING : HF/HF1
* STUB-IN : STU * SOCKET(HDPE/PVC) : SC * SADDLE(HDPE) : SD * FLANGE : F/F1 * GASKET : G/G1/G2 * BOLT & NUT : B/B1 * BLIND FLANGE : FB/FB1 * GATE VA. : VG/VG1/VG2 * BALL VA. : VB/VBL0/VB1/VB1L0/VB2/VB2L0 * BUTTERFLY VA. : VF/VF4 * CHECK VA. : VC/VC1/VC2/VC3/VC4/VC5/VC6/VC7
* GLOBE VA. : VL/VL1/VL2 * DIAPHRAGM VA. : VD/VDL0 * DAMPER : VP * QUICK COUPLING : SQC * FLEXIBLE JOINT(STEEL) : FLXB * FLEXIBLE JOINT(RUBBER) : FLXR * FLEXIBLE JOINT(STEEL_PTFE LINED) : FLXL * FLEXIBLE HOSE : FLXH * STEAM TRAP : ST * SPRAY NOZZLE : SPN * EMERGENCY SHOWER : SSH
* STRAINER(Y-TYPE) : YSTR * STRAINER(T-TYPE) : TSTR * STRAINER(BUCKET-TYPE) : BSTR * ANCHOR PLATE : STOP * BIRD SCREEN : BS * ISOLATION KIT : IK * UNLOADING BOX : UB * AIR TRAP : AT * LOTO : LOTO * SIGHT GLASS : SG * PRESSURE GAUGE : PG * SHILED : SH * SPECIAL BOLT & NUT : BL/BL1

CLIENT SK hynix 8

INSULATION	CODE	N	CONDITION	PRESS. (kg/cm2g)	TEMP. (°C)
	THICK.	–	DESIGN	3.3	60
			OPERATING	3.0	AMB

AREA W14
UNIT 4FA
REF. PLAN DWG. CJ-M15W14-PI-A30-040010-A
REF. P & ID CJ-M15W14-PR-A20-000315

REV. NO.	DATE	DESCRIPTION	BY	CHK	APP'D
0	25.01.24	APPROVED FOR CONSTRUCTION	황래종	안남후	박동영

CONTRACTOR SK ecoplant
PROJECT NAME M15X Ph4 Project
COMMODITY NaOCl
JOB NO. 22330D
LINE NO. OD25-NaOCl-PV3-N-7017
SH'T NO. 01 / 01
REV. 0

경고 : 본 도면은 SK HYNIX의 기업비밀 자료로서, 어떠한 경우에도 목적 외 사용, 복제, 제3자에게 공개, 누설 및 유출할 수 없으며, 회사는 유포자의 불법 사용으로 피해가 발생할 경우 유포자에게 민/형사상 책임을 요구할 수 있음.

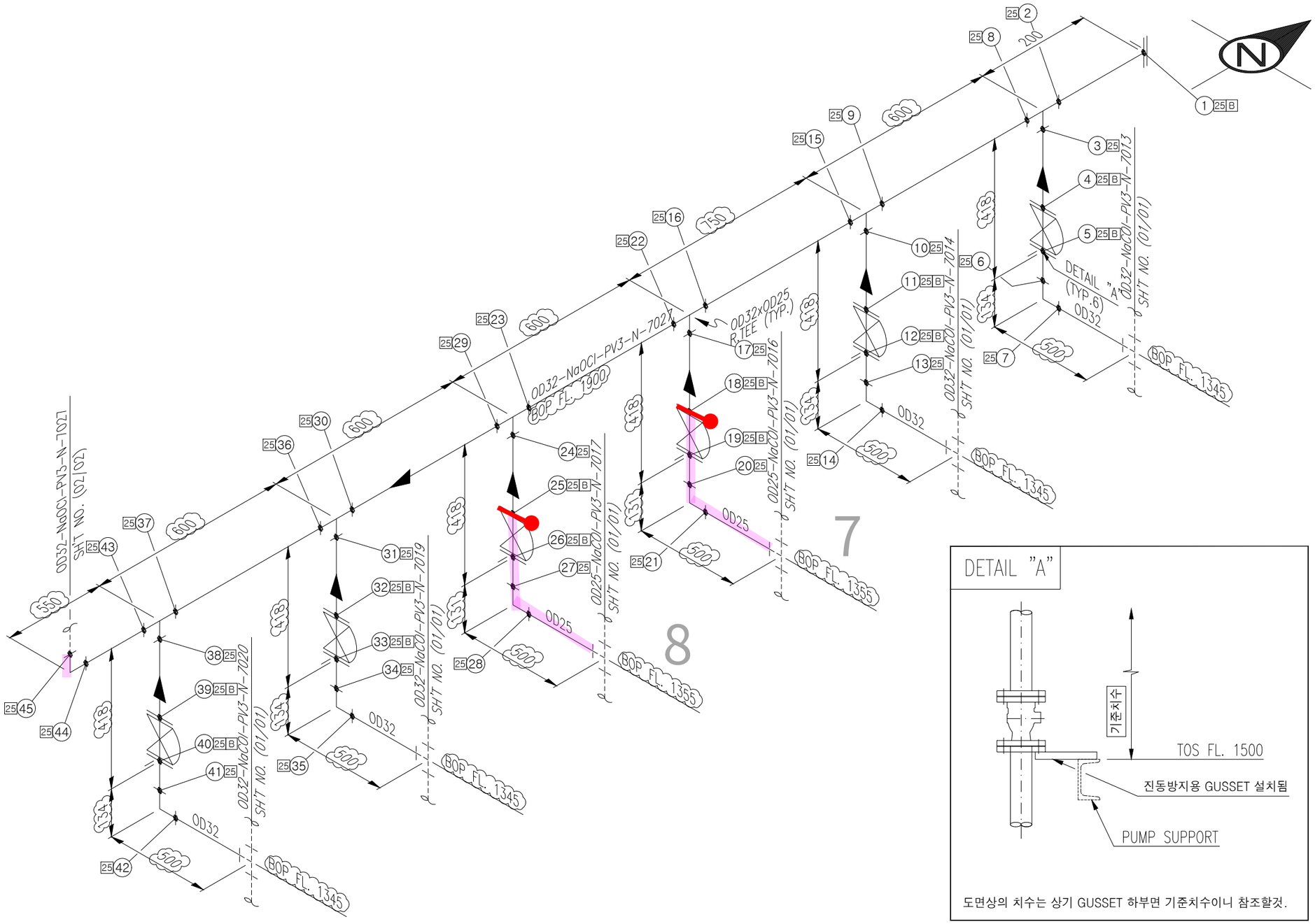

도면상의 치수는 상기 GUSSET 하부면 기준치수이니 참조할것.

<NOTE>
1. TRAY & ANGLE,CHANNEL SUPPORT가 적용되는 배관 ELEVATION은 현장 맞춤으로 한다.
2. (*) FIELD ADJUST

SK ecoplant

ITEM	SIZE	Q'TY	DESCRIPTION
		PV3	
P	OD32	9.2M	PIPE, CPVC, PE, SOCKET FUSION, SDR13.5
P	OD25	2.5M	PIPE, CPVC, PE, SOCKET FUSION, SDR13.5
E90	OD32	5EA	ELBOW 90 DEG, CPVC, PE, SOCKET FUSION, SDR13.5
E90	OD25	2EA	ELBOW 90 DEG, CPVC, PE, SOCKET FUSION, SDR13.5
T	OD32	4EA	TEE EQUAL, CPVC, PE, SOCKET FUSION, SDR13.5
TR	OD32xOD25	2EA	TEE RED, CPVC, PE, SOCKET FUSION, SDR13.5
VD	OD32	4EA	DIAPHRAGM VALVE, KS 10K, FF FLG'D, BODY-CPVC /
			TRIM-PDDM, BB, HW
VD	OD25	2EA	DIAPHRAGM VALVE, KS 10K, FF FLG'D, BODY-CPVC /
			TRIM-PDDM, BB, HW
F	OD32	9EA	FLG, KS 10K, FF, STUB FLG CPVC /
			BACKING RING(PP)+INSERT(STEEL), SDR13.5
F	OD25	4EA	FLG, KS 10K, FF, STUB FLG CPVC /
			BACKING RING(PP)+INSERT(STEEL), SDR13.5
FB	OD32	1EA	FLG BLIND, KS 10K, FF, CPVC, SDR13.5
G	OD32	9EA	GASKET, KS 10K, FF, PTFE+EPDM, 3.0MM TH'K
G	OD25	4EA	GASKET, KS 10K, FF, PTFE+EPDM, 3.0MM TH'K
B	OD32	9SET	MACHINE BOLT & NYLON NUT :STS 304 / W WASHERS
B	OD25	4SET	MACHINE BOLT & NYLON NUT :STS 304 / W WASHERS
SH	OD32	9EA	SHIELD
SH	OD25	4EA	SHIELD

* PIPE : P/P1 * 90° ELBOW : E90 * 45° ELBOW : E45 * TEE : T * RED.TEE : TR * STUB-IN : STU * REINFORCING PAD : RP * CON.RED : RC * ECC.RED : RE * CON.SWAGE : RCS/RCS1 * ECC.SWAGE : RES/RES1 * NIPPLE : NP/NP1/NP2 * CAP : CAP/CAP1 * PLUG : PLG * FULL COUPLING : FC * HALF COUPLING : HF/HF1
* STUB-IN : STU * SOCKET(HDPE/PVC) : SC * SADDLE(HDPE) : SD * FLANGE : F/F1 * GASKET : G/G1/G2 * BOLT & NUT : B/B1 * BLIND FLANGE : FB/FB1 * GATE VA. : VG/VG1/VG2 * BALL VA. : VB/VBLO/VB1/VB1LO/VB2/VB2LO * BUTTERFLY VA. : VF/VF4 * CHECK VA. : VC/VC1/VC2/VC3/VC4/VC5/VC6/VC7
* GLOBE VA. : VL/VL1/VL2 * DIAPHRAGM VA. : VD/VDLO * DAMPER : VP * QUICK COUPLING : SQC * FLEXIBLE JOINT(STEEL) : FLXB * FLEXIBLE JOINT(RUBBER) : FLXR * FLEXIBLE JOINT(STEEL_PTFE LINED) : FLXL * FLEXIBLE HOSE : FLXH * STEAM TRAP : ST * SPRAY NOZZLE : SPN * EMERGENCY SHOWER : SSH
* STRAINER(Y-TYPE) : YSTR * STRAINER(T-TYPE) : TSTR * STRAINER(BUCKET-TYPE) : BSTR * ANCHOR PLATE : STOP * BIRD SCREEN : BS * ISOLATION KIT : IK * UNLOADING BOX : UB * AIR TRAP : AT * LOTO : LOTO * SIGHT GLASS : SG * PRESSURE GAUGE : PG * SHILED : SH * SPECIAL BOLT & NUT : BL/BL1

CLIENT SK hynix 9

INSULATION	CODE	N	CONDITION	PRESS. (kg/cm2g)	TEMP. (°C)
	THICK.	–	DESIGN	3.3	60
			OPERATING	3.0	AMB

AREA W14
UNIT 4FA
REF. PLAN DWG. CJ-M15W14-PI-A30-040010-A
REF. P & ID CJ-M15W14-PR-A20-000315

REV. NO.	DATE	DESCRIPTION	BY	CHK	APP'D
0	25.01.24	APPROVED FOR CONSTRUCTION	황래종	안남후	박동영

CONTRACTOR SK ecoplant
PROJECT NAME M15X Ph4 Project
COMMODITY NaOCl
JOB NO. 22330D
LINE NO. OD32-NaOCl-PV3-N-7027
SH'T NO. 01 / 02
REV. 0

경고 : 본 도면은 SK HYNIX의 기업비밀 자료로서, 어떠한 경우에도 목적 외 사용, 복제, 제3자에게 공개, 누설 및 유출할 수 없으며, 회사는 유포자의 불법 사용으로 피해가 발생할 경우 유포자에게 민/형사상 책임을 요구할 수 있음.