DRAWING LIST FOR TEST PACKAGE

NaOCL-595

PROJECT NO.: 22328D

PROJECT TITLE : M15X Ph2 Project

No	PKG No	UNIT	LINE NUMBER			P&ID		REMARK
			ISO DRAWING No	SHEET	REV	P&ID No	REV	
1	595	3FA	OD32-NaOCl-PV3-N-7026-01	1 OF 1	0	CJ-M15W14-PR-A20-000507		
2	595	4FA	OD25-NaOCl-PV3-N-7022-01	1 OF 3	0	CJ-M15W14-PR-A20-000315		
3	595	4FA	OD25-NaOCl-PV3-N-7023-01	2 OF 3	0	CJ-M15W14-PR-A20-000315		
4	595	4FA	OD32-NaOCl-PV3-N-7024-01	1 OF 1	0	CJ-M15W14-PR-A20-000315		
5	595	4FA	OD32-NaOCl-PV3-N-7025-01	1 OF 1	0	CJ-M15W14-PR-A20-000315		
6	595	4FA	OD32-NaOCl-PV3-N-7026-01	1 OF 2	0	CJ-M15W14-PR-A20-000315		
7	595	4FA	OD32-NaOCl-PV3-N-7026-02	2 OF 2	0	CJ-M15W14-PR-A20-000507		
8	595	2FA	OD32-NaOCl-PV3-E-7026-01	1 OF 1	1	CJ-M15W14-PR-A20-000507		
9	595	R2FA	OD32-NaOCl-PV3-N-7026-01	1 OF 1	1	CJ-M15W14-PR-A20-000507		
10	595	4FA	OD32-NaOCl-PV3-N-7028-01	1 OF 1	0	CJ-M15W14-PR-A20-000315		

MBR MAKER PACKAGE NOTE 3

ITEM NO.	W14-LM-4740
SERVICE	BRINE MBR LINE MIXER
Q'TY	1
TYPE	LINE STATIC MIXER
CAPA. m3/hr	BY VENDOR
MAT'L	C.S + PTFE

ITEM NO.	W14-T-4741
SERVICE	BRINE MBR BACKWASH TANK
Q'TY	1
TYPE	RECTANGULAR
SIZE (W x L x H) m	3.0mW x 4.0mW x 3.5mH (EH 3.2)
CAPA. m3	42 (EH 38.4)
MAT'L	FRP

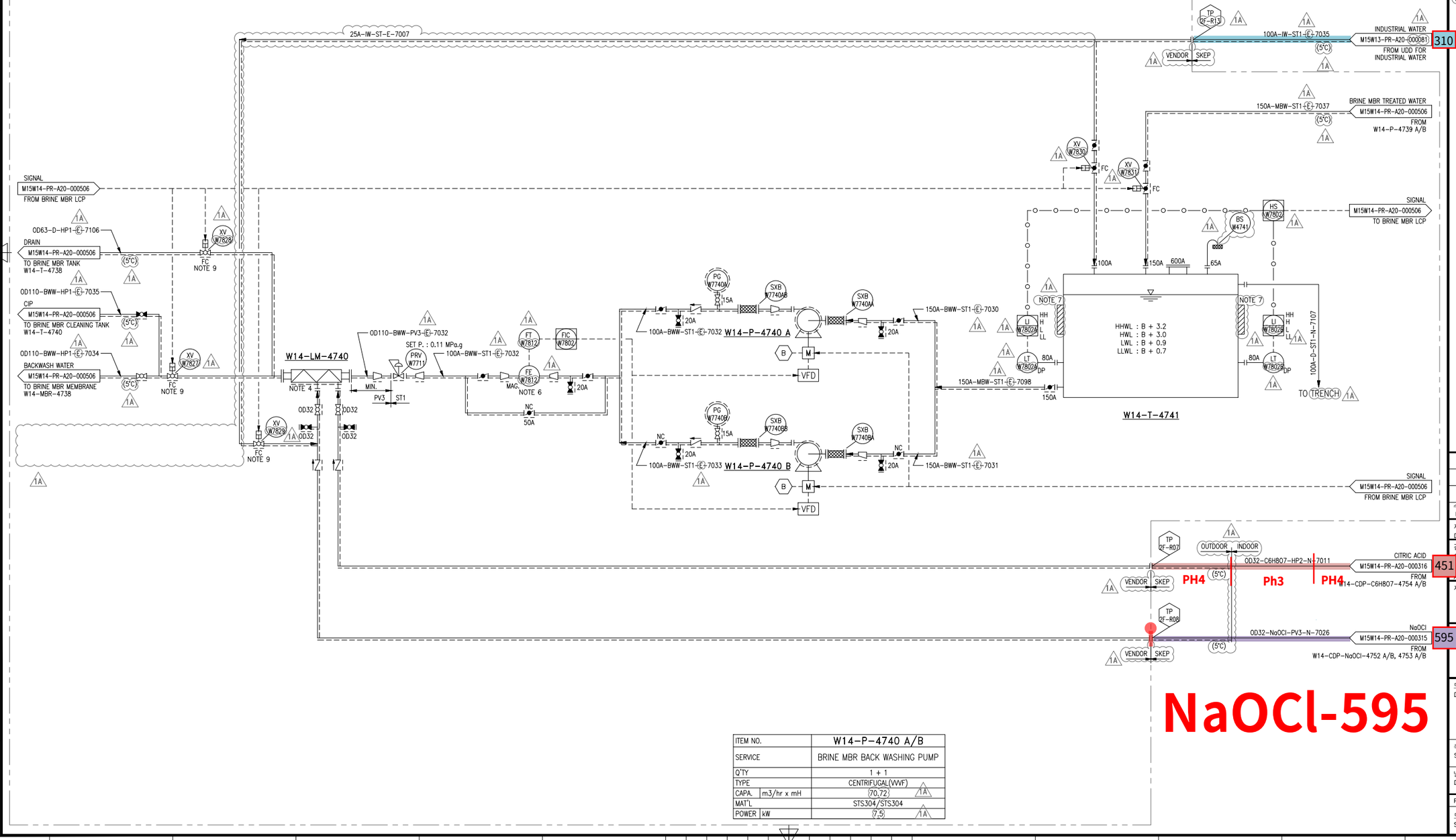

ITEM NO.	W14-P-4740 A/B
SERVICE	BRINE MBR BACK WASHING PUMP
Q'TY	1 + 1
TYPE	CENTRIFUGAL(VWF)
CAPA. m3/hr x mH	70.72
MAT'L	STS304/STS304
POWER kW	7.5

대외비

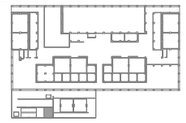

KEY PLAN (2F)

NOTE

1. 운전 시 CLOSE 되는 배관에는 LOTO 설치.
2. CENTRIFUGAL PUMP. MAT'L 표기 : CASING / IMPELLER
3. PACKAGE VENDOR 선정 후 내부 SYSTEM (모든 EQUIPMENT SPEC., LINE SIZE, INSTRUMENT CONTROL SCHEME 등) 확정 예정.
4. 약품주입 배관은 MIXER 아래쪽으로 연결할 것.
5. DELETED.
6. INSTRUMENT VENDOR 선정 후 CONTROL SCHEME 및 CONTROL VALVE INLET / OUTLET NOZZLE SIZE 확정 예정.
7. INSULATION을 HLL까지 적용

수정 REV.	설 명 DESCRIPTION	날 짜 DATE
1A	REVISED AFC	25.08.14
1	REVISED AFC	25.01.17
0	APPROVAL FOR CONSTRUCTION	24.10.31

제 도 DRAWN BY	이 인 학
검 토 CHECKED BY	한 진 희
승 인 APPROVED BY	박 동 영
제 작 사	SK 에코플랜트
공 사 명 PROJECT TITLE	M15X Ph4 WWT Project
도면명 DWG. TITLE	PIPING & INSTRUMENT DIAGRAM BRINE MBR BACK WASHING PUMP
축 척 SCALE	NONE
날 짜 DATE	2025. 08. 14
PROJECT NO.	22330D
도면번호 SHEET NO.	CJ-M15W14-PR-A20-000507
REV.	1A

A1(594x841mm ±2mm)

C:WUsersWTOPWDesktopWP&ID251013W[M15X Ph-4 for 인허가]CAD FILE_0910WCJ-M15W14-PR-A20-000507 R1 P&ID FOR BRINE
경고! 본 도면은 SK E&S 및 SK hynix의 기업비밀 자료로서, 이미 승인 받아 배포된 목적 외 사용, 복제 및 제3자에게 공개 또는 누설할 수 없으며, 위반 시 부정경쟁방지 및 영업비밀 보호에 관한 법률 등 관련 법령에 의거 민·형사상 책임을 지게 될 수 있음

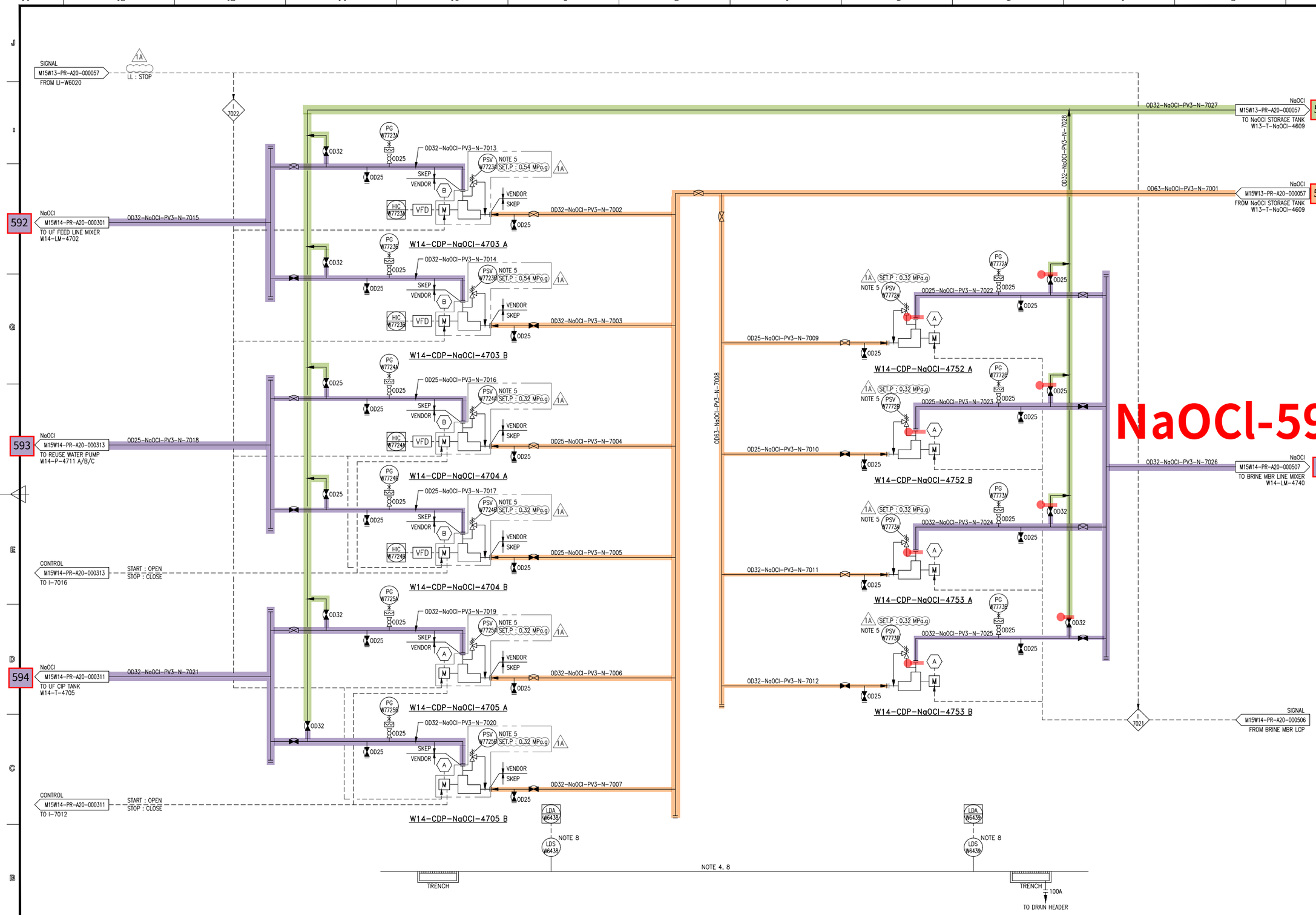

ITEM NO.	W14-CDP-NaOCl-4703 A/B
SERVICE	UF FEED WATER LINE MIXER NaOCl FEED PUMP
Q'TY	1 + 1
TYPE	DIAPHRAGM
CAPA. l/min.ea x MPa	(MAX 11.2 x MAX 0.7 NOTE 9)
MAT'L	PVDF/PTFE(+EPDM)/CERAMIC
POWER kW	0.75

ITEM NO.	W14-CDP-NaOCl-4704 A/B
SERVICE	RO TREATED WATER NaOCl FEED PUMP
Q'TY	1 + 1
TYPE	DIAPHRAGM
CAPA. l/min.ea x MPa	(MAX 4.1 x MAX 0.8 NOTE 10)
MAT'L	PVDF/PTFE(+EPDM)/CERAMIC
POWER kW	0.4

ITEM NO.	W14-CDP-NaOCl-4705 A/B
SERVICE	UF CIP TANK NaOCl FEED PUMP
Q'TY	1 + 1
TYPE	DIAPHRAGM
CAPA. l/min.ea x MPa	(MAX 11.2 x MAX 0.7 NOTE 11)
MAT'L	PVDF/PTFE(+EPDM)/CERAMIC
POWER kW	0.75

ITEM NO.	W14-CDP-NaOCl-4752 A/B
SERVICE	BRINE MBR LINE MIXER NaOCl FEED PUMP (MC)
Q'TY	1 + 1
TYPE	DIAPHRAGM
CAPA. l/min.ea x MPa	(MAX 1.04 x MAX 1 NOTE 12)
MAT'L	PVDF/PTFE/CERAMIC
POWER kW	0.55

ITEM NO.	W14-CDP-NaOCl-4753 A/B
SERVICE	BRINE MBR LINE MIXER NaOCl FEED PUMP (RC)
Q'TY	1 + 1
TYPE	DIAPHRAGM
CAPA. l/min.ea x MPa	(MAX 11.2 x MAX 0.7 NOTE 13)
MAT'L	PVDF/PTFE/CERAMIC
POWER kW	0.75

대외비

KEY PLAN (4F)

NOTE

1. 운전 시 CLOSE 되는 배관에는 LOTO 설치.
2. DIAPHRAGM PUMP MAT'L 표기 : HEAD / DIAPHRAGM / CHECK BALL 약품종류에 따라 LINE 색상을 구분하여야 한다.
4. CHEMICAL ROOM 내 TRENCH & PIT DRAIN은 DRAIN HEADER를 통하여 근처의 안전한 수조로 유입된다.
5. PUMP VENDOR 공급.
6. INTERLOCK NO. I-7021 (W14-CDP-NaOCl-4752 A/B, W14-CDP-NaOCl-4753 A/B AUTO STOP) : REMOTE STATUS에서 W13-T-NaOCl-4609 LEVEL (LI-W6020) LOW LOW STOP. BRINE MBR CIP/BACK WASH 시 START/STOP.
7. INTERLOCK NO. I-7022 (W14-CDP-NaOCl-4703 A/B, W14-CDP-NaOCl-4704 A/B, W14-CDP-NaOCl-4705 A/B AUTO STOP) : REMOTE STATUS에서 W13-T-NaOCl-4609 LEVEL (LI-W6020) LOW LOW STOP.
8. REUSE SYSTEM 및 BRINE 처리 SYSTEM의 공급용 PUMP 주변의 LEAK DETECTOR는 기 공급됨. (LDS-W6438/W6439)
9. OPERATING CAPACITY : 5 LPM OPERATING PRESSURE : 0.49 MPa
10. OPERATING CAPACITY : 3 LPM OPERATING PRESSURE : 0.29 MPa
11. OPERATING CAPACITY : 8 LPM OPERATING PRESSURE : 0.29 MPa
12. OPERATING CAPACITY : 1 LPM OPERATING PRESSURE : 0.29 MPa
13. OPERATING CAPACITY : 10 LPM OPERATING PRESSURE : 0.29 MPa

수정 REV.	설명 DESCRIPTION	날짜 DATE
1A	REVISED AFC	25.08.14
1	REVISED AFC	25.01.17
0	APPROVAL FOR CONSTRUCTION	24.10.31

제도 DRAWN BY: 이인학
검토 CHECKED BY: 한진희
승인 APPROVED BY: 박동영
제작사: SK 에코플랜트
공사명 PROJECT TITLE: M15X Ph4 WWT Project
도면명 DWG. TITLE: PIPING & INSTRUMENT DIAGRAM NaOCl FEED PUMP
축척 SCALE: NONE
날짜 DATE: 2025. 08. 14
PROJECT NO. 22330D REV. 1A
도면번호 SHEET NO. CJ-M15W14-PR-A20-000315

C:WUsersWTOPWDesktopWP&ID251013W[M15X Ph-4 for 인허가]CAD FILE_0910WCJ-M15W14-PR-A20-000315 R1 P&ID FOR NaOC

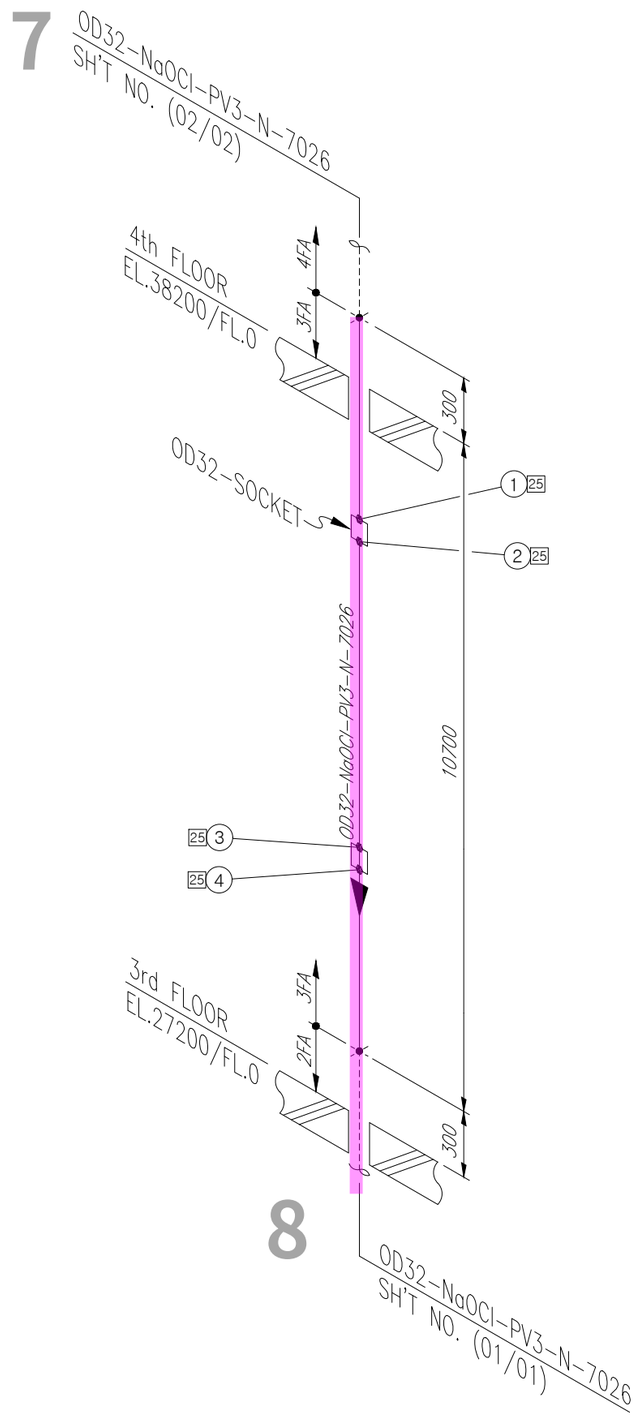

<NOTE>
1. (*) FIELD ADJUST

ITEM	SIZE	Q'TY	DESCRIPTION
		PV3	
P	OD32	11.0M	PIPE, CPVC, PE, SOCKET FUSION, SDR13.5
SC	OD32	2EA	SOCKET, CPVC, PE, SOCKET FUSION, SDR13.5

* PIPE : P/P1 * 90° ELBOW : E90 * 45° ELBOW : E45 * TEE : T * RED.TEE : TR * STUB-IN : STU * REINFORCING PAD : RP * CON.RED : RC * ECC.RED : RE * CON.SWAGE : RCS/RCS1 * ECC.SWAGE : RES/RES1 * NIPPLE : NP/NP1/NP2 * CAP : CAP/CAP1 * PLUG : PLG * FULL COUPLING : FC * HALF COUPLING : HF/HF1
* STUB-IN : STU * SOCKET(HDPE/PVC) : SC * SADDLE(HDPE) : SD * FLANGE : F/F1 * GASKET : G/G1/G2 * BOLT & NUT : B/B1 * BLIND FLANGE : FB/FB1 * GATE VA. : VG/VG1/VG2 * BALL VA. : VB/VBL0/VB1/VB1L0/VB2/VB2L0 * BUTTERFLY VA. : VF/VF4 * CHECK VA. : VC/VC1/VC2/VC3/VC4/VC5/VC6/VC7
* GLOBE VA. : VL/VL1/VL2 * DIAPHRAGM VA. : VD/VDL0 * DAMPER : VP * QUICK COUPLING : SQC * FLEXIBLE JOINT(STEEL) : FLXB * FLEXIBLE JOINT(RUBBER) : FLXR * FLEXIBLE JOINT(STEEL_PTFE LINED) : FLXL * FLEXIBLE HOSE : FLXH * STEAM TRAP : ST * SPRAY NOZZLE : SPN * EMERGENCY SHOWER : SSH
* STRAINER(Y-TYPE) : YSTR * STRAINER(T-TYPE) : TSTR * STRAINER(BUCKET-TYPE) : BSTR * ANCHOR PLATE : STOP * BIRD SCREEN : BS * ISOLATION KIT : IK * UNLOADING BOX : UB * AIR TRAP : AT * LOTO : LOTO * SIGHT GLASS : SG * PRESSURE GAUGE : PG * SHILED : SH * SPECIAL BOLT & NUT : BL/BL1

CLIENT SK hynix 1

INSULATION	CODE	N	CONDITION	PRESS. (kg/cm2g)	TEMP. (°C)
	THICK.	–	DESIGN	3.3	60
			OPERATING	3.0	AMB

AREA W14
UNIT 3FA
REF. PLAN DWG. CJ-M15W14-PI-A30-030006-A
REF. P & ID CJ-M15W14-PR-A20-000315

REV. NO.	DATE	DESCRIPTION	BY	CHK	APP'D
0	25.01.24	APPROVED FOR CONSTRUCTION	황래종	안남후	박동영

CONTRACTOR SK ecoplant
PROJECT NAME M15X Ph4 Project
COMMODITY NaOCl
JOB NO. 22330D
LINE NO. OD32-NaCOI-PV3-N-7026
SH'T NO. 01 / 01
REV. 0

경고 : 본 도면은 SK HYNIX의 기업비밀 자료로서, 어떠한 경우에도 목적 외 사용, 복제, 제3자에게 공개, 누설 및 유출할 수 없으며, 회사는 유포자의 불법 사용으로 피해가 발생할 경우 유포자에게 민/형사상 책임을 요구할 수 있음.

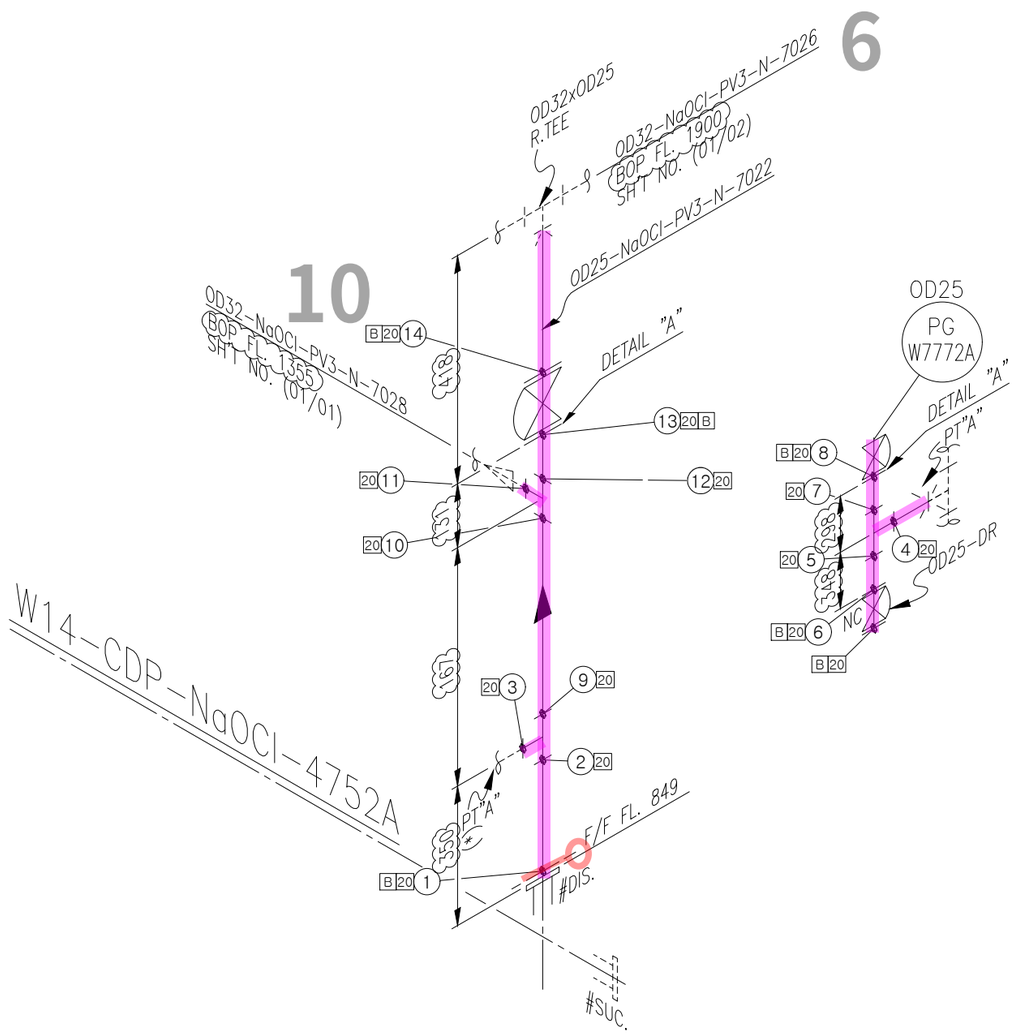

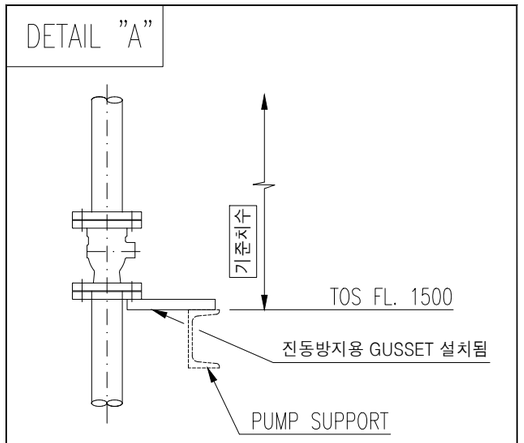

도면상의 치수는 상기 GUSSET 하부면 기준치수이니 참조할것.

<NOTE>
1. TRAY & ANGLE,CHANNEL SUPPORT가 적용되는 배관 ELEVATION은 현장 맞춤으로 한다.
2. (*) FIELD ADJUST

SK ecoplant

ITEM	SIZE	Q'TY	DESCRIPTION
		PV3	
P	OD32	1.3M	PIPE, CPVC, PE, SOCKET FUSION, SDR13.5
T	OD25	3EA	TEE EQUAL, CPVC, PE, SOCKET FUSION, SDR13.5
F	OD25	5EA	FLG, KS 10K, FF, STUB FLG CPVC /
			BACKING RING(PP)+INSERT(STEEL), SDR13.5
FB	OD25	1EA	FLG BLIND, KS 10K, FF, CPVC, SDR13.5
G	OD25	6EA	GASKET, KS 10K, FF, PTFE+EPDM, 3.0MM TH'K
B	OD25	6SET	MACHINE BOLT & NYLON NUT :STS 304 / W WASHERS
VD	OD25	3EA	DIAPHRAGM VALVE, KS 10K, FF FLG'D, BODY-CPVC /
			TRIM-PDDM, BB, HW
SH	OD25	6EA	SHIELD
LOTO	OD25	1EA	LOTO
PG	OD25	1EA	PRESSURE GAUGE, KS 10K, FF

* PIPE : P/P1 * 90° ELBOW : E90 * 45° ELBOW : E45 * TEE : T * RED.TEE : TR * STUB-IN : STU * REINFORCING PAD : RP * CON.RED : RC * ECC.RED : RE * CON.SWAGE : RCS/RCS1 * ECC.SWAGE : RES/RES1 * NIPPLE : NP/NP1/NP2 * CAP : CAP/CAP1 * PLUG : PLG * FULL COUPLING : FC * HALF COUPLING : HF/HF1
* STUB-IN : STU * SOCKET(HDPE/PVC) : SC * SADDLE(HDPE) : SD * FLANGE : F/F1 * GASKET : G/G1/G2 * BOLT & NUT : B/B1 * BLIND FLANGE : FB/FB1 * GATE VA. : VG/VG1/VG2 * BALL VA. : VB/VBL0/VB1/VB1L0/VB2/VB2L0 * BUTTERFLY VA. : VF/VF4 * CHECK VA. : VC/VC1/VC2/VC3/VC4/VC5/VC6/VC7
* GLOBE VA. : VL/VL1/VL2 * DIAPHRAGM VA. : VD/VDL0 * DAMPER : VP * QUICK COUPLING : SQC * FLEXIBLE JOINT(STEEL) : FLXB * FLEXIBLE JOINT(RUBBER) : FLXR * FLEXIBLE JOINT(STEEL_PTFE LINED) : FLXL * FLEXIBLE HOSE : FLXH * STEAM TRAP : ST * SPRAY NOZZLE : SPN * EMERGENCY SHOWER : SSH
* STRAINER(Y-TYPE) : YSTR * STRAINER(T-TYPE) : TSTR * STRAINER(BUCKET-TYPE) : BSTR * ANCHOR PLATE : STOP * BIRD SCREEN : BS * ISOLATION KIT : IK * UNLOADING BOX : UB * AIR TRAP : AT * LOTO : LOTO * SIGHT GLASS : SG * PRESSURE GAUGE : PG * SHILED : SH * SPECIAL BOLT & NUT : BL/BL1

CLIENT SK hynix 2

INSULATION	CODE	N	CONDITION	PRESS. (kg/cm2g)	TEMP. (°C)
	THICK.	–	DESIGN	3.3	60
			OPERATING	3.0	AMB

AREA W14
UNIT 4FA
REF. PLAN DWG. CJ-M15W14-PI-A30-040010-A
REF. P & ID CJ-M15W14-PR-A20-000315

REV. NO.	DATE	DESCRIPTION	BY	CHK	APP'D
0	25.01.24	APPROVED FOR CONSTRUCTION	황래종	안남후	박동영

CONTRACTOR SK ecoplant
PROJECT NAME M15X Ph4 Project
COMMODITY NaOCl
JOB NO. 22330D
LINE NO. OD25-NaOCl-PV3-N-7022
SH'T NO. 01 / 01
REV. 0

경고 : 본 도면은 SK HYNIX의 기업비밀 자료로서, 어떠한 경우에도 목적 외 사용, 복제, 제3자에게 공개, 누설 및 유출할 수 없으며, 회사는 유포자의 불법 사용으로 피해가 발생할 경우 유포자에게 민/형사상 책임을 요구할 수 있음.

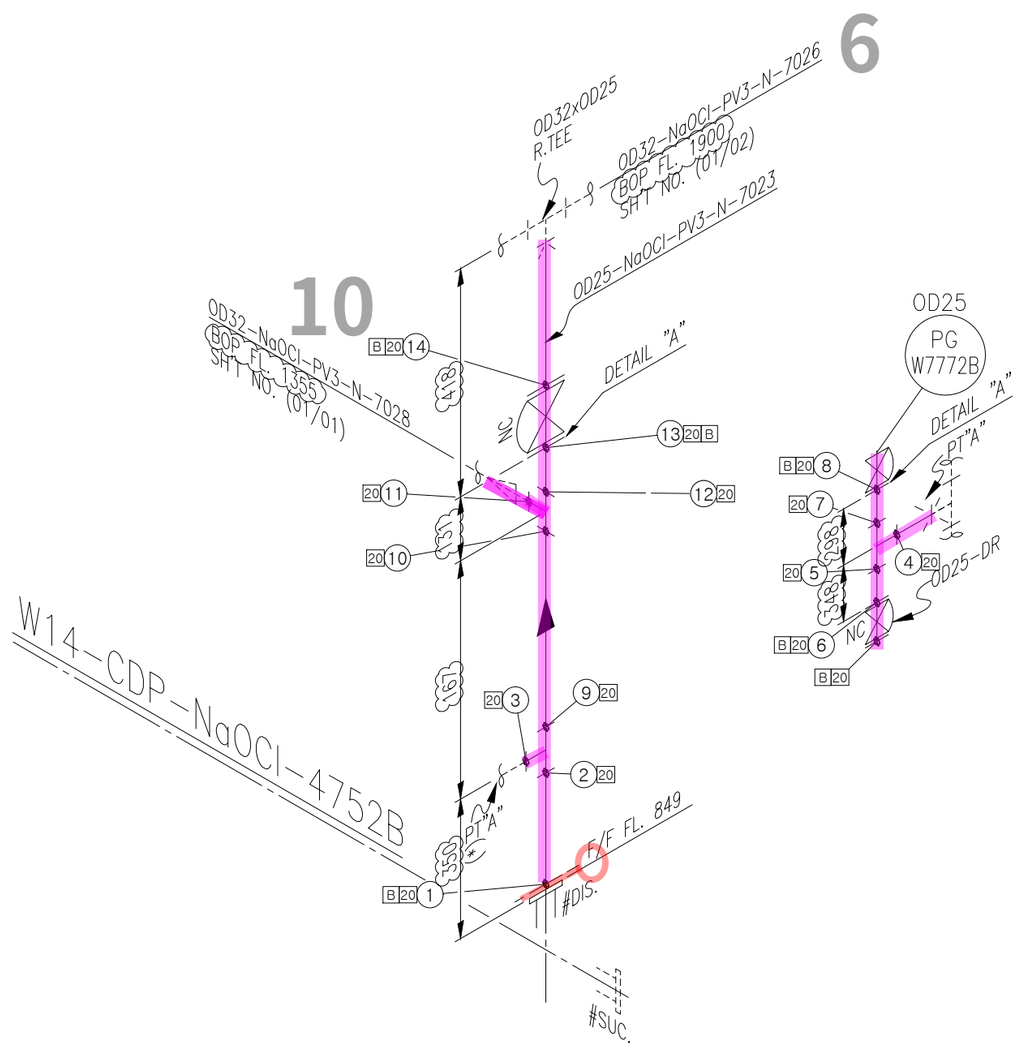

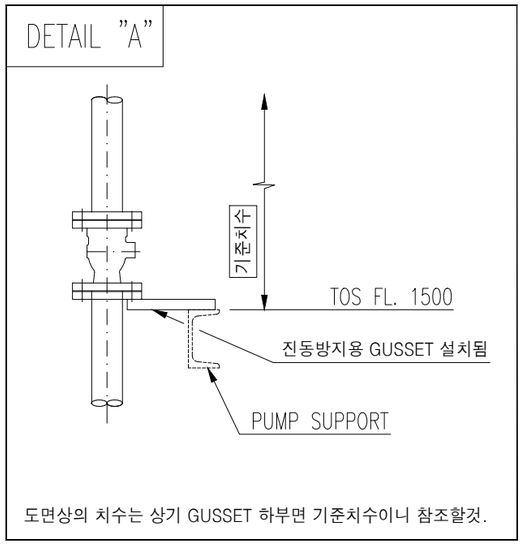

<NOTE>
1. TRAY & ANGLE,CHANNEL SUPPORT가 적용되는 배관 ELEVATION은 현장 맞춤으로 한다.
2. (*) FIELD ADJUST

SK ecoplant

ITEM	SIZE	Q'TY	DESCRIPTION
		PV3	
P	OD32	1.3M	PIPE, CPVC, PE, SOCKET FUSION, SDR13.5
T	OD25	3EA	TEE EQUAL, CPVC, PE, SOCKET FUSION, SDR13.5
F	OD25	5EA	FLG, KS 10K, FF, STUB FLG CPVC /
			BACKING RING(PP)+INSERT(STEEL), SDR13.5
FB	OD25	1EA	FLG BLIND, KS 10K, FF, CPVC, SDR13.5
G	OD25	6EA	GASKET, KS 10K, FF, PTFE+EPDM, 3.0MM TH'K
B	OD25	6SET	MACHINE BOLT & NYLON NUT :STS 304 / W WASHERS
VD	OD25	3EA	DIAPHRAGM VALVE, KS 10K, FF FLG'D, BODY-CPVC /
			TRIM-PDDM, BB, HW
SH	OD25	6EA	SHIELD
LOTO	OD25	2EA	LOTO
PG	OD25	1EA	PRESSURE GAUGE, KS 10K, FF

* PIPE : P/P1 * 90° ELBOW : E90 * 45° ELBOW : E45 * TEE : T * RED.TEE : TR * STUB-IN : STU * REINFORCING PAD : RP * CON.RED : RC * ECC.RED : RE * CON.SWAGE : RCS/RCS1 * ECC.SWAGE : RES/RES1 * NIPPLE : NP/NP1/NP2 * CAP : CAP/CAP1 * PLUG : PLG * FULL COUPLING : FC * HALF COUPLING : HF/HF1
* STUB-IN : STU * SOCKET(HDPE/PVC) : SC * SADDLE(HDPE) : SD * FLANGE : F/F1 * GASKET : G/G1/G2 * BOLT & NUT : B/B1 * BLIND FLANGE : FB/FB1 * GATE VA. : VG/VG1/VG2 * BALL VA. : VB/VBL0/VB1/VB1L0/VB2/VB2L0 * BUTTERFLY VA. : VF/VF4 * CHECK VA. : VC/VC1/VC2/VC3/VC4/VC5/VC6/VC7
* GLOBE VA. : VL/VL1/VL2 * DIAPHRAGM VA. : VD/VDL0 * DAMPER : VP * QUICK COUPLING : SQC * FLEXIBLE JOINT(STEEL) : FLXB * FLEXIBLE JOINT(RUBBER) : FLXR * FLEXIBLE JOINT(STEEL_PTFE LINED) : FLXL * FLEXIBLE HOSE : FLXH * STEAM TRAP : ST * SPRAY NOZZLE : SPN * EMERGENCY SHOWER : SSH
* STRAINER(Y-TYPE) : YSTR * STRAINER(T-TYPE) : TSTR * STRAINER(BUCKET-TYPE) : BSTR * ANCHOR PLATE : STOP * BIRD SCREEN : BS * ISOLATION KIT : IK * UNLOADING BOX : UB * AIR TRAP : AT * LOTO : LOTO * SIGHT GLASS : SG * PRESSURE GAUGE : PG * SHILED : SH * SPECIAL BOLT & NUT : BL/BL1

CLIENT SK hynix 3

INSULATION	CODE	N
	THICK.	–

CONDITION	PRESS. (kg/cm2g)	TEMP. (°C)
DESIGN	3.3	60
OPERATING	3.0	AMB

AREA W14
UNIT 4FA
REF. PLAN DWG. CJ-M15W14-PI-A30-040010-A
REF. P & ID CJ-M15W14-PR-A20-000315

REV. NO.	DATE	DESCRIPTION	BY	CHK	APP'D
0	25.01.24	APPROVED FOR CONSTRUCTION	황래종	안남후	박동영

CONTRACTOR SK ecoplant
PROJECT NAME M15X Ph4 Project
COMMODITY NaOCl
JOB NO. 22330D
LINE NO. OD25-NaOCl-PV3-N-7023
SH'T NO. 01 / 01
REV. 0

경고 : 본 도면은 SK HYNIX의 기업비밀 자료로서, 어떠한 경우에도 목적 외 사용, 복제, 제3자에게 공개, 누설 및 유출할 수 없으며, 회사는 유포자의 불법 사용으로 피해가 발생할 경우 유포자에게 민/형사상 책임을 요구할 수 있음.

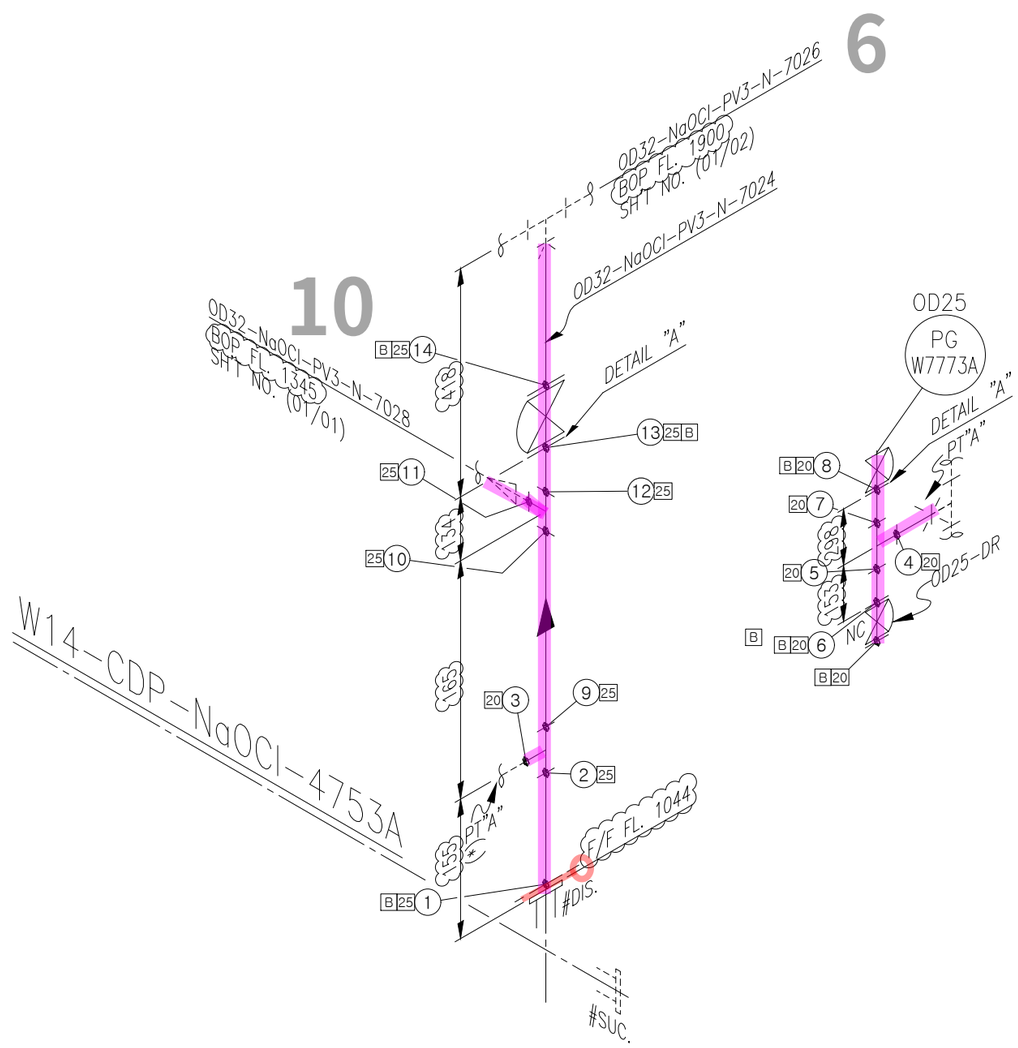

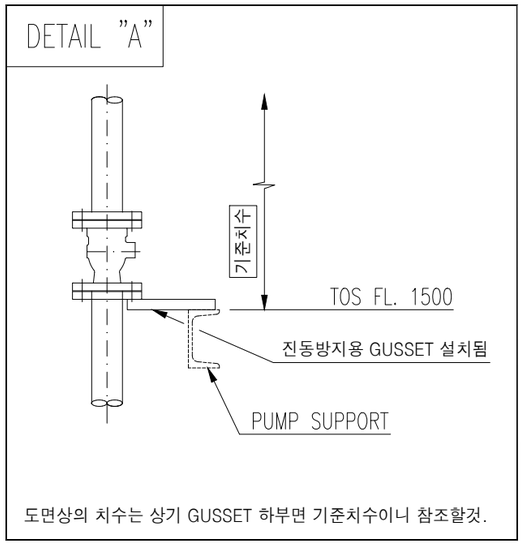

<NOTE>
1. TRAY & ANGLE,CHANNEL SUPPORT가 적용되는 배관 ELEVATION은 현장 맞춤으로 한다.
2. (*) FIELD ADJUST

SK ecoplant

ITEM	SIZE	Q'TY	DESCRIPTION
		PV3	
P	OD32	1.0M	PIPE, CPVC, PE, SOCKET FUSION, SDR13.5
P	OD25	0.3M	PIPE, CPVC, PE, SOCKET FUSION, SDR13.5
T	OD32	1EA	TEE EQUAL, CPVC, PE, SOCKET FUSION, SDR13.5
T	OD25	1EA	TEE EQUAL, CPVC, PE, SOCKET FUSION, SDR13.5
TR	OD32xOD25	1EA	TEE RED, CPVC, PE, SOCKET FUSION, SDR13.5
F	OD32	3EA	FLG, KS 10K, FF, STUB FLG CPVC /
			BACKING RING(PP)+INSERT(STEEL), SDR13.5
F	OD25	2EA	FLG, KS 10K, FF, STUB FLG CPVC /
			BACKING RING(PP)+INSERT(STEEL), SDR13.5
FB	OD25	1EA	FLG BLIND, KS 10K, FF, CPVC, SDR13.5
G	OD32	3EA	GASKET, KS 10K, FF, PTFE+EPDM, 3.0MM TH'K
G	OD25	3EA	GASKET, KS 10K, FF, PTFE+EPDM, 3.0MM TH'K
B	OD32	3EA	MACHINE BOLT & NYLON NUT :STS 304 / W WASHERS
B	OD25	3SET	MACHINE BOLT & NYLON NUT :STS 304 / W WASHERS
VD	OD32	1EA	DIAPHRAGM VALVE, KS 10K, FF FLG'D, BODY-CPVC /
			TRIM-PDDM, BB, HW
VD	OD25	2EA	DIAPHRAGM VALVE, KS 10K, FF FLG'D, BODY-CPVC /
			TRIM-PDDM, BB, HW
SH	OD32	3EA	SHIELD
SH	OD25	3EA	SHIELD
LOTO	OD25	1EA	LOTO
PG	OD25	1EA	PRESSURE GAUGE, KS 10K, FF

* PIPE : P/P1 * 90° ELBOW : E90 * 45° ELBOW : E45 * TEE : T * RED.TEE : TR * STUB-IN : STU * REINFORCING PAD : RP * CON.RED : RC * ECC.RED : RE * CON.SWAGE : RCS/RCS1 * ECC.SWAGE : RES/RES1 * NIPPLE : NP/NP1/NP2 * CAP : CAP/CAP1 * PLUG : PLG * FULL COUPLING : FC * HALF COUPLING : HF/HF1
* STUB-IN : STU * SOCKET(HDPE/PVC) : SC * SADDLE(HDPE) : SD * FLANGE : F/F1 * GASKET : G/G1/G2 * BOLT & NUT : B/B1 * BLIND FLANGE : FB/FB1 * GATE VA. : VG/VG1/VG2 * BALL VA. : VB/VBL0/VB1/VB1L0/VB2/VB2L0 * BUTTERFLY VA. : VF/VF4 * CHECK VA. : VC/VC1/VC2/VC3/VC4/VC5/VC6/VC7
* GLOBE VA. : VL/VL1/VL2 * DIAPHRAGM VA. : VD/VDL0 * DAMPER : VP * QUICK COUPLING : SQC * FLEXIBLE JOINT(STEEL) : FLXB * FLEXIBLE JOINT(RUBBER) : FLXR * FLEXIBLE JOINT(STEEL_PTFE LINED) : FLXL * FLEXIBLE HOSE : FLXH * STEAM TRAP : ST * SPRAY NOZZLE : SPN * EMERGENCY SHOWER : SSH
* STRAINER(Y-TYPE) : YSTR * STRAINER(T-TYPE) : TSTR * STRAINER(BUCKET-TYPE) : BSTR * ANCHOR PLATE : STOP * BIRD SCREEN : BS * ISOLATION KIT : IK * UNLOADING BOX : UB * AIR TRAP : AT * LOTO : LOTO * SIGHT GLASS : SG * PRESSURE GAUGE : PG * SHILED : SH * SPECIAL BOLT & NUT : BL/BL1

CLIENT SK hynix 4

INSULATION	CODE	N
	THICK.	–

CONDITION	PRESS. (kg/cm2g)	TEMP. (°C)
DESIGN	3.3	60
OPERATING	3.0	AMB

AREA W14
UNIT 4FA
REF. PLAN DWG. CJ-M15W14-PI-A30-040010-A
REF. P & ID CJ-M15W14-PR-A20-000315

REV. NO.	DATE	DESCRIPTION	BY	CHK	APP'D
0	25.01.24	APPROVED FOR CONSTRUCTION	황래종	안남후	박동영

CONTRACTOR SK ecoplant
PROJECT NAME M15X Ph4 Project
COMMODITY NaOCl
JOB NO. 22330D
LINE NO. 0D32-NaOCl-PV3-N-7024
SH'T NO. 01 / 01
REV. 0

경고 : 본 도면은 SK HYNIX의 기업비밀 자료로서, 어떠한 경우에도 목적 외 사용, 복제, 제3자에게 공개, 누설 및 유출할 수 없으며, 회사는 유포자의 불법 사용으로 피해가 발생할 경우 유포자에게 민/형사상 책임을 요구할 수 있음.

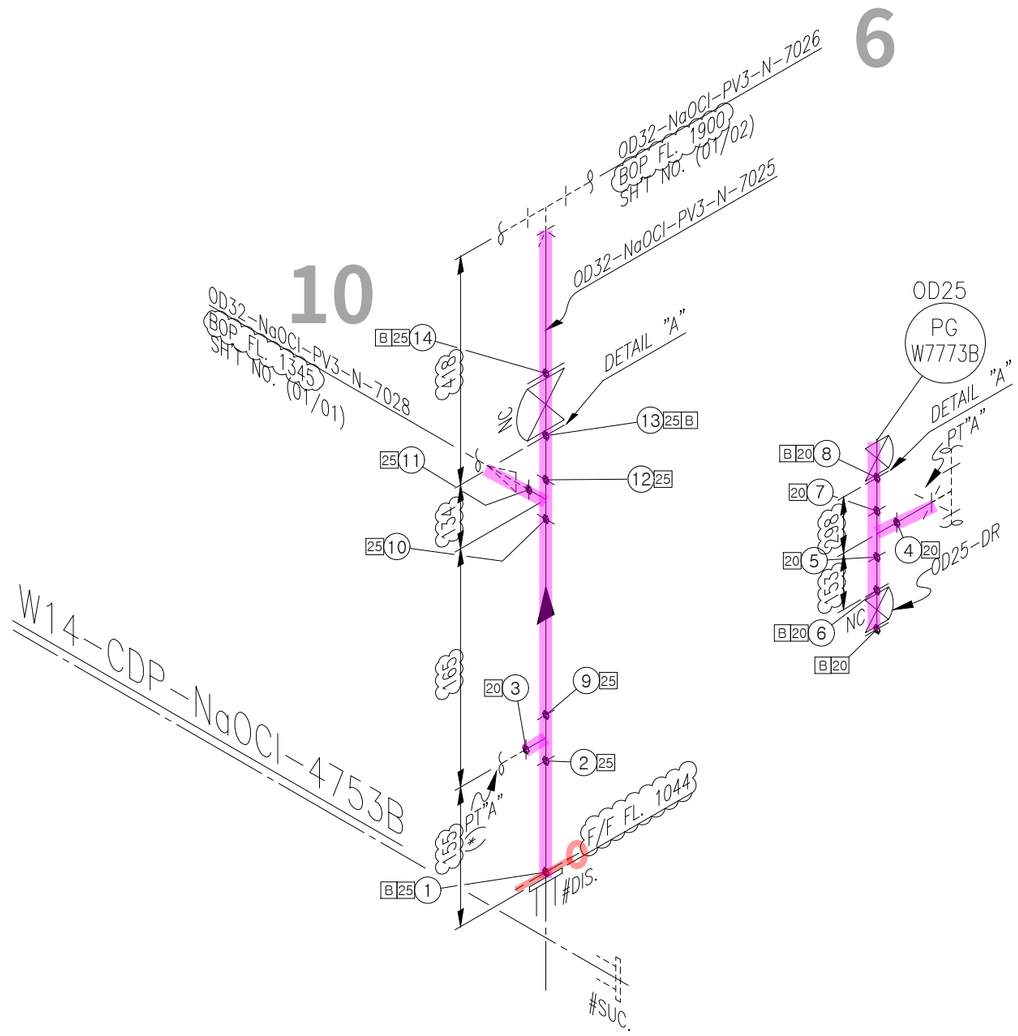

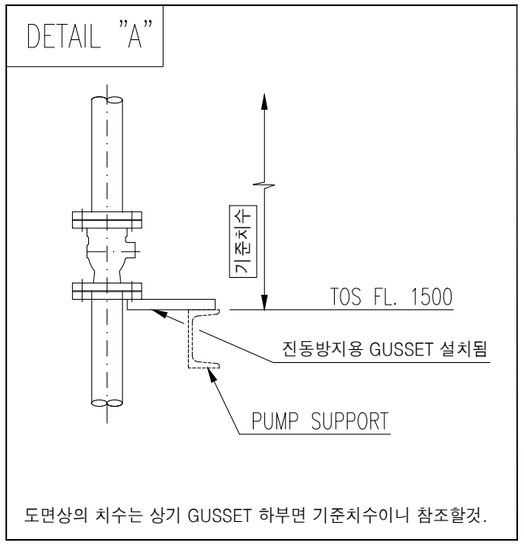

<NOTE>
1. TRAY & ANGLE,CHANNEL SUPPORT가 적용되는 배관 ELEVATION은 현장 맞춤으로 한다.
2. (*) FIELD ADJUST

SK ecoplant

ITEM	SIZE	Q'TY	DESCRIPTION
		PV3	
P	OD32	1.0M	PIPE, CPVC, PE, SOCKET FUSION, SDR13.5
P	OD25	0.3M	PIPE, CPVC, PE, SOCKET FUSION, SDR13.5
T	OD32	1EA	TEE EQUAL, CPVC, PE, SOCKET FUSION, SDR13.5
T	OD25	1EA	TEE EQUAL, CPVC, PE, SOCKET FUSION, SDR13.5
TR	OD32xOD25	1EA	TEE RED, CPVC, PE, SOCKET FUSION, SDR13.5
F	OD32	3EA	FLG, KS 10K, FF, STUB FLG CPVC /
			BACKING RING(PP)+INSERT(STEEL), SDR13.5
F	OD25	2EA	FLG, KS 10K, FF, STUB FLG CPVC /
			BACKING RING(PP)+INSERT(STEEL), SDR13.5
FB	OD25	1EA	FLG BLIND, KS 10K, FF, CPVC, SDR13.5
G	OD32	3EA	GASKET, KS 10K, FF, PTFE+EPDM, 3.0MM TH'K
G	OD25	3EA	GASKET, KS 10K, FF, PTFE+EPDM, 3.0MM TH'K
B	OD32	3EA	MACHINE BOLT & NYLON NUT :STS 304 / W WASHERS
B	OD25	3SET	MACHINE BOLT & NYLON NUT :STS 304 / W WASHERS
VD	OD32	1EA	DIAPHRAGM VALVE, KS 10K, FF FLG'D, BODY-CPVC /
			TRIM-PDDM, BB, HW
VD	OD25	2EA	DIAPHRAGM VALVE, KS 10K, FF FLG'D, BODY-CPVC /
			TRIM-PDDM, BB, HW
SH	OD32	3EA	SHIELD
SH	OD25	3EA	SHIELD
LOTO	OD25	1EA	LOTO
LOTO	OD32	1EA	LOTO
PG	OD25	1EA	PRESSURE GAUGE, KS 10K, FF

* PIPE : P/P1 * 90° ELBOW : E90 * 45° ELBOW : E45 * TEE : T * RED.TEE : TR * STUB-IN : STU * REINFORCING PAD : RP * CON.RED : RC * ECC.RED : RE * CON.SWAGE : RCS/RCS1 * ECC.SWAGE : RES/RES1 * NIPPLE : NP/NP1/NP2 * CAP : CAP/CAP1 * PLUG : PLG * FULL COUPLING : FC * HALF COUPLING : HF/HF1
* STUB-IN : STU * SOCKET(HDPE/PVC) : SC * SADDLE(HDPE) : SD * FLANGE : F/F1 * GASKET : G/G1/G2 * BOLT & NUT : B/B1 * BLIND FLANGE : FB/FB1 * GATE VA. : VG/VG1/VG2 * BALL VA. : VB/VBL0/VB1/VB1L0/VB2/VB2L0 * BUTTERFLY VA. : VF/VF4 * CHECK VA. : VC/VC1/VC2/VC3/VC4/VC5/VC6/VC7
* GLOBE VA. : VL/VL1/VL2 * DIAPHRAGM VA. : VD/VDL0 * DAMPER : VP * QUICK COUPLING : SQC * FLEXIBLE JOINT(STEEL) : FLXB * FLEXIBLE JOINT(RUBBER) : FLXR * FLEXIBLE JOINT(STEEL_PTFE LINED) : FLXL * FLEXIBLE HOSE : FLXH * STEAM TRAP : ST * SPRAY NOZZLE : SPN * EMERGENCY SHOWER : SSH
* STRAINER(Y-TYPE) : YSTR * STRAINER(T-TYPE) : TSTR * STRAINER(BUCKET-TYPE) : BSTR * ANCHOR PLATE : STOP * BIRD SCREEN : BS * ISOLATION KIT : IK * UNLOADING BOX : UB * AIR TRAP : AT * LOTO : LOTO * SIGHT GLASS : SG * PRESSURE GAUGE : PG * SHILED : SH * SPECIAL BOLT & NUT : BL/BL1

CLIENT SK hynix 5

INSULATION	CODE	N
	THICK.	–

CONDITION	PRESS. (kg/cm2g)	TEMP. (°C)
DESIGN	3.3	60
OPERATING	3.0	AMB

AREA W14
UNIT 4FA
REF. PLAN DWG. CJ-M15W14-PI-A30-040010-A
REF. P & ID CJ-M15W14-PR-A20-000315

REV. NO.	DATE	DESCRIPTION	BY	CHK	APP'D
0	25.01.24	APPROVED FOR CONSTRUCTION	황래종	안남후	박동영

CONTRACTOR SK ecoplant
PROJECT NAME M15X Ph4 Project
COMMODITY NaOCl
JOB NO. 22330D
LINE NO. 0D32-NaOCl-PV3-N-7025
SH'T NO. 01 / 01
REV. 0

경고 : 본 도면은 SK HYNIX의 기업비밀 자료로서, 어떠한 경우에도 목적 외 사용, 복제, 제3자에게 공개, 누설 및 유출할 수 없으며, 회사는 유포자의 불법 사용으로 피해가 발생할 경우 유포자에게 민/형사상 책임을 요구할 수 있음.

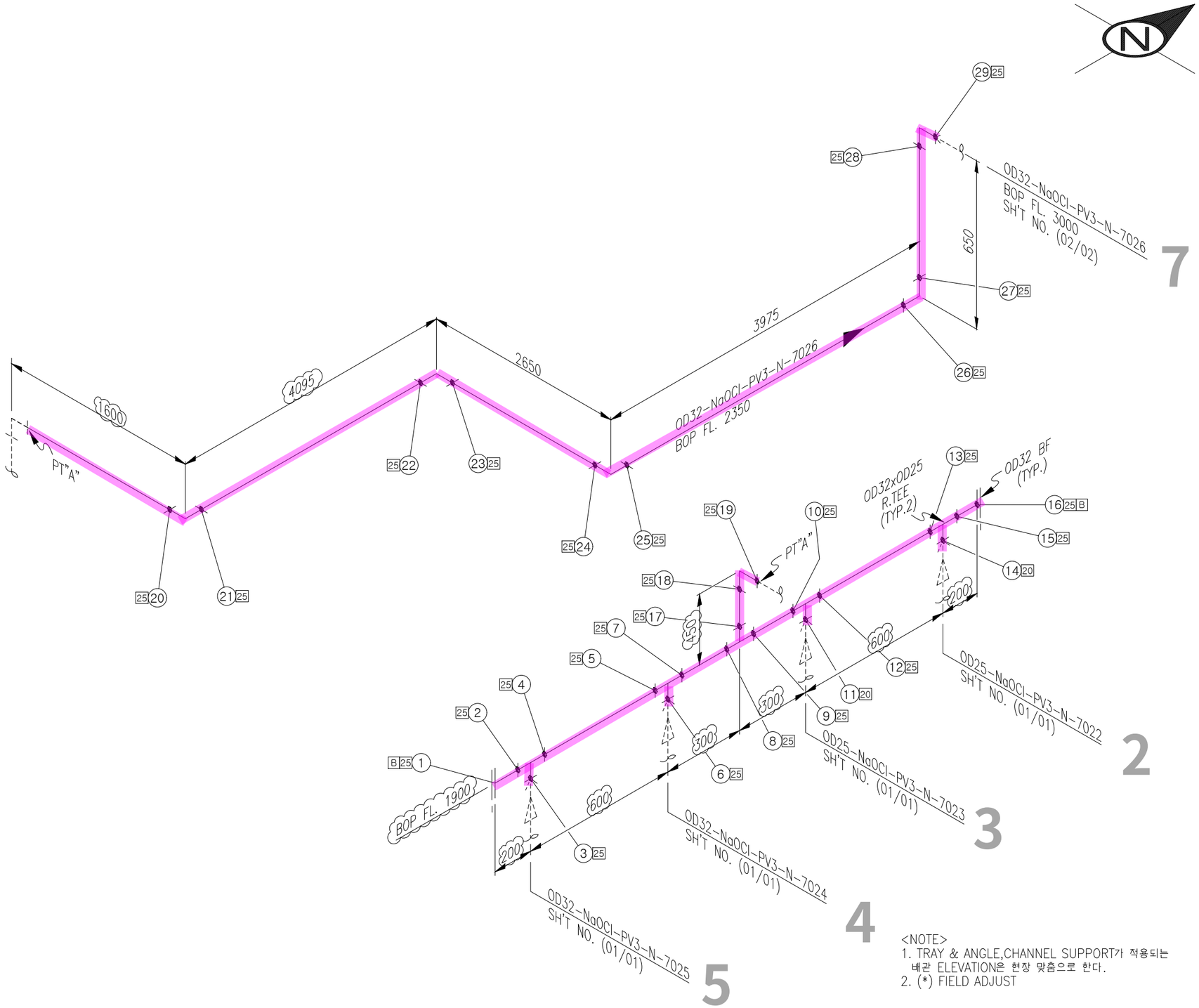

<NOTE>
1. TRAY & ANGLE,CHANNEL SUPPORT가 적용되는
배관 ELEVATION은 현장 맞춤으로 한다.
2. (*) FIELD ADJUST

SK ecoplant

ITEM	SIZE	Q'TY	DESCRIPTION
		PV3	
P	OD32	15.6M	PIPE, CPVC, PE, SOCKET FUSION, SDR13.5
E90	OD32	6EA	ELBOW 90 DEG, CPVC, PE, SOCKET FUSION, SDR13.5
T	OD32	3EA	TEE EQUAL, CPVC, PE, SOCKET FUSION, SDR13.5
TR	OD32xOD25	2EA	TEE RED, CPVC, PE, SOCKET FUSION, SDR13.5
F	OD32	2EA	FLG, KS 10K, FF, STUB FLG CPVC /
			BACKING RING(PP)+INSERT(STEEL), SDR13.5
FB	OD32	2EA	FLG BLIND, KS 10K, FF, CPVC, SDR13.5
G	OD32	2EA	GASKET, KS 10K, FF, PTFE+EPDM, 3.0MM TH'K
B	OD32	2SET	MACHINE BOLT & NYLON NUT :STS 304 / W WASHERS
SH	OD32	2EA	SHIELD

* PIPE : P/P1 * 90° ELBOW : E90 * 45° ELBOW : E45 * TEE : T * RED.TEE : TR * STUB-IN : STU * REINFORCING PAD : RP * CON.RED : RC * ECC.RED : RE * CON.SWAGE : RCS/RCS1 * ECC.SWAGE : RES/RES1 * NIPPLE : NP/NP1/NP2 * CAP : CAP/CAP1 * PLUG : PLG * FULL COUPLING : FC * HALF COUPLING : HF/HF1
* STUB-IN : STU * SOCKET(HDPE/PVC) : SC * SADDLE(HDPE) : SD * FLANGE : F/F1 * GASKET : G/G1/G2 * BOLT & NUT : B/B1 * BLIND FLANGE : FB/FB1 * GATE VA. : VG/VG1/VG2 * BALL VA. : VB/VBLO/VB1/VB1LO/VB2/VB2LO * BUTTERFLY VA. : VF/VF4 * CHECK VA. : VC/VC1/VC2/VC3/VC4/VC5/VC6/VC7
* GLOBE VA. : VL/VL1/VL2 * DIAPHRAGM VA. : VD/VDLO * DAMPER : VP * QUICK COUPLING : SQC * FLEXIBLE JOINT(STEEL) : FLXB * FLEXIBLE JOINT(RUBBER) : FLXR * FLEXIBLE JOINT(STEEL_PTFE LINED) : FLXL * FLEXIBLE HOSE : FLXH * STEAM TRAP : ST * SPRAY NOZZLE : SPN * EMERGENCY SHOWER : SSH
* STRAINER(Y-TYPE) : YSTR * STRAINER(T-TYPE) : TSTR * STRAINER(BUCKET-TYPE) : BSTR * ANCHOR PLATE : STOP * BIRD SCREEN : BS * ISOLATION KIT : IK * UNLOADING BOX : UB * AIR TRAP : AT * LOTO : LOTO * SIGHT GLASS : SG * PRESSURE GAUGE : PG * SHILED : SH * SPECIAL BOLT & NUT : BL/BL1

CLIENT SK hynix 6

INSULATION	CODE	N	CONDITION	PRESS. (kg/cm2g)	TEMP. (°C)
	THICK.	–	DESIGN	3.3	60
			OPERATING	3.0	AMB

AREA W14
UNIT 4FA
REF. PLAN DWG. CJ-M15W14-PI-A30-040010-A
REF. P & ID CJ-M15W14-PR-A20-000315

REV. NO.	DATE	DESCRIPTION	BY	CHK	APP'D
0	25.01.24	APPROVED FOR CONSTRUCTION	황래종	안남후	박동영

CONTRACTOR SK ecoplant
PROJECT NAME M15X Ph4 Project
COMMODITY NaOCl
JOB NO. 22330D
LINE NO. OD32-NaOCl-PV3-N-7026
SH'T NO. 01 / 03
REV. 0

경고 : 본 도면은 SK HYNIX의 기업비밀 자료로서, 어떠한 경우에도 목적 외 사용, 복제, 제3자에게 공개, 누설 및 유출할 수 없으며, 회사는 유포자의 불법 사용으로 피해가 발생할 경우 유포자에게 민/형사상 책임을 요구할 수 있음.

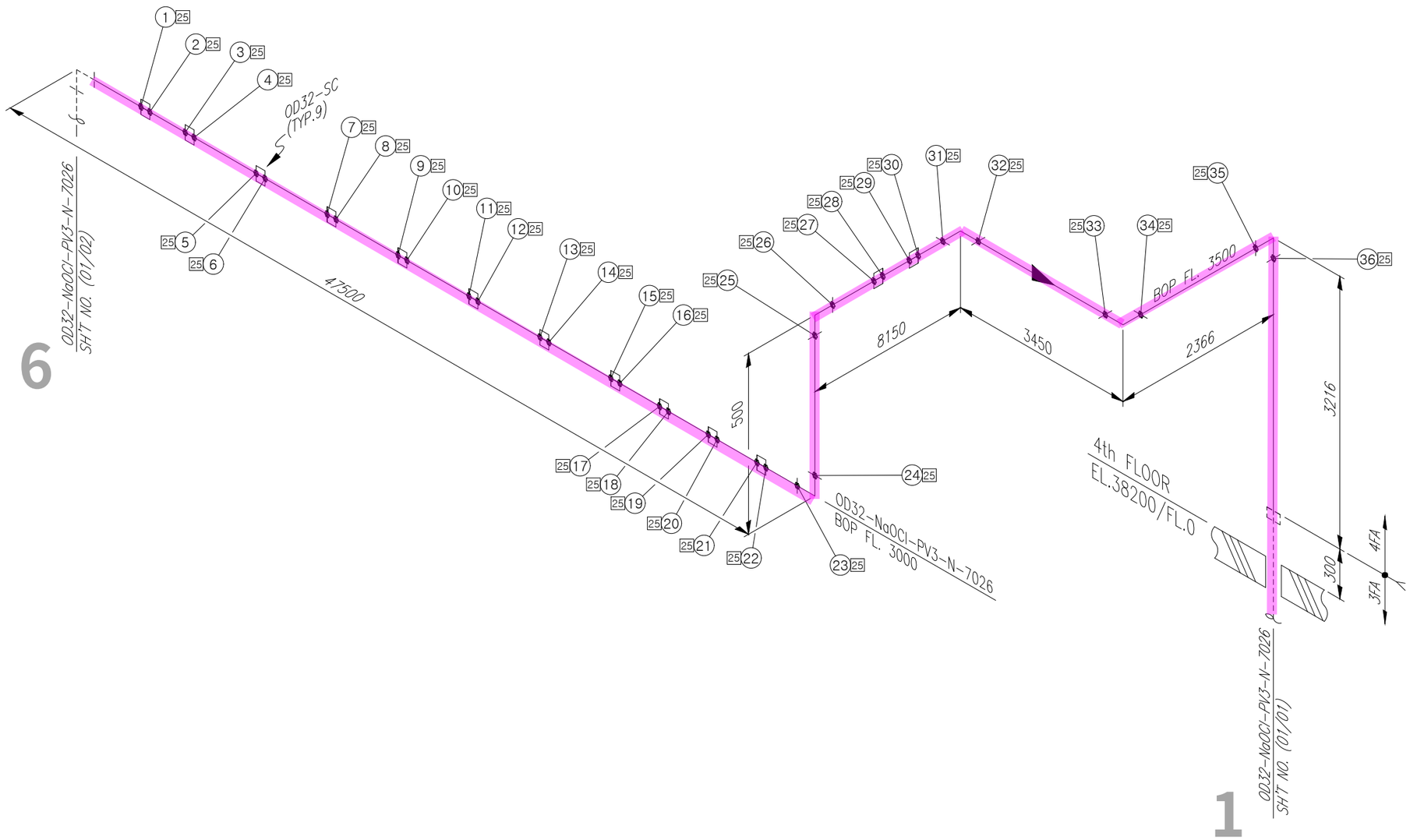

ITEM	SIZE	Q'TY	DESCRIPTION
		PV3	
P	OD32	65.2M	PIPE, CPVC, PE, SOCKET FUSION, SDR13.5
E90	OD32	5EA	ELBOW 90 DEG, CPVC, PE, SOCKET FUSION, SDR13.5
SC	OD32	13EA	SOCKET, CPVC, PE, SOCKET FUSION, SDR13.5

<NOTE>
1. TRAY & ANGLE,CHANNEL SUPPORT가 적용되는 배관 ELEVATION은 현장 맞춤으로 한다.
2. (*) FIELD ADJUST

* PIPE : P/P1 * 90° ELBOW : E90 * 45° ELBOW : E45 * TEE : T * RED.TEE : TR * STUB-IN : STU * REINFORCING PAD : RP * CON.RED : RC * ECC.RED : RE * CON.SWAGE : RCS/RCS1 * ECC.SWAGE : RES/RES1 * NIPPLE : NP/NP1/NP2 * CAP : CAP/CAP1 * PLUG : PLG * FULL COUPLING : FC * HALF COUPLING : HF/HF1
* STUB-IN : STU * SOCKET(HDPE/PVC) : SC * SADDLE(HDPE) : SD * FLANGE : F/F1 * GASKET : G/G1/G2 * BOLT & NUT : B/B1 * BLIND FLANGE : FB/FB1 * GATE VA. : VG/VG1/VG2 * BALL VA. : VB/VBL0/VB1/VB1L0/VB2/VB2L0 * BUTTERFLY VA. : VF/VF4 * CHECK VA. : VC/VC1/VC2/VC3/VC4/VC5/VC6/VC7
* GLOBE VA. : VL/VL1/VL2 * DIAPHRAGM VA. : VD/VDL0 * DAMPER : VP * QUICK COUPLING : SQC * FLEXIBLE JOINT(STEEL) : FLXB * FLEXIBLE JOINT(RUBBER) : FLXR * FLEXIBLE JOINT(STEEL_PTFE LINED) : FLXL * FLEXIBLE HOSE : FLXH * STEAM TRAP : ST * SPRAY NOZZLE : SPN * EMERGENCY SHOWER : SSH
* STRAINER(Y-TYPE) : YSTR * STRAINER(T-TYPE) : TSTR * STRAINER(BUCKET-TYPE) : BSTR * ANCHOR PLATE : STOP * BIRD SCREEN : BS * ISOLATION KIT : IK * UNLOADING BOX : UB * AIR TRAP : AT * LOTO : LOTO * SIGHT GLASS : SG * PRESSURE GAUGE : PG * SHILED : SH * SPECIAL BOLT & NUT : BL/BL1

CLIENT SK hynix 7

INSULATION	CODE	N	CONDITION	PRESS. (kg/cm2g)	TEMP. (°C)
	THICK.	–	DESIGN	1	60
			OPERATING	ATM	AMB

AREA W14
UNIT 4FA
REF. PLAN DWG. CJ-M15W14-PI-A30-040007-A
REF. P & ID CJ-M15W14-PR-A20-000315

REV. NO.	DATE	DESCRIPTION	BY	CHK	APP'D
0	25.01.24	APPROVED FOR CONSTRUCTION	황래종	안남후	박동영

CONTRACTOR SK ecoplant
PROJECT NAME M15X Ph4 Project
COMMODITY NaOCl
JOB NO. 22330D
LINE NO. OD32-NaOCl-PV3-N-7026
SH'T NO. 02 / 02
REV. 0

경고 : 본 도면은 SK HYNIX의 기업비밀 자료로서, 어떠한 경우에도 목적 외 사용, 복제, 제3자에게 공개, 누설 및 유출할 수 없으며, 회사는 유포자의 불법 사용으로 피해가 발생할 경우 유포자에게 민/형사상 책임을 요구할 수 있음.

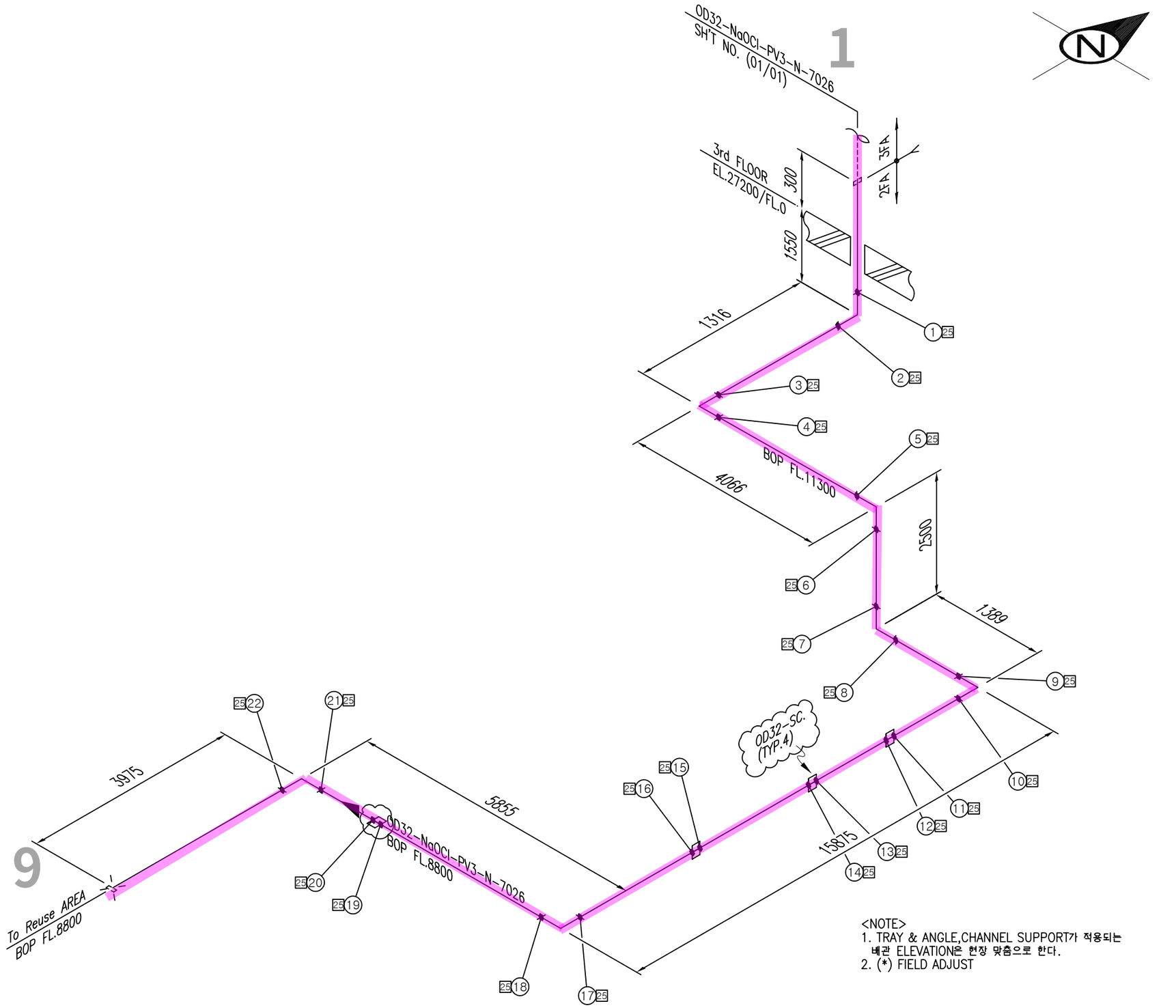

<NOTE>
1. TRAY & ANGLE,CHANNEL SUPPORT가 적용되는 배관 ELEVATION은 현장 맞춤으로 한다.
2. (*) FIELD ADJUST

ITEM	SIZE	Q'TY	DESCRIPTION
PV3			
P	OD32	36.8M	PIPE, CPVC, PE, SOCKET FUSION, SDR13.5
E90	OD32	7EA	ELBOW 90 DEG, CPVC, PE, SOCKET FUSION, SDR13.5
SC	OD32	4EA	SOCKET, CPVC, PE, SOCKET FUSION, SDR13.5

* PIPE : P/P1 * 90° ELBOW : E90 * 45° ELBOW : E45 * TEE : T * RED.TEE : TR * STUB-IN : STU * REINFORCING PAD : RP * CON.RED : RC * ECC.RED : RE * CON.SWAGE : RCS/RCS1 * ECC.SWAGE : RES/RES1 * NIPPLE : NP/NP1/NP2 * CAP : CAP/CAP1 * PLUG : PLG * FULL COUPLING : FC * HALF COUPLING : HF/HF1
* STUB-IN : STU * SOCKET(HDPE/PVC) : SC * SADDLE(HDPE) : SD * FLANGE : F/F1 * GASKET : G/G1/G2 * BOLT & NUT : B/B1 * BLIND FLANGE : FB/FB1 * GATE VA. : VG/VG1/VG2 * BALL VA. : VB/VBL0/VB1/VB1L0/VB2/VB2L0 * BUTTERFLY VA. : VF/VF4 * CHECK VA. : VC/VC1/VC2/VC3/VC4/VC5/VC6/VC7
* GLOBE VA. : VL/VL1/VL2 * DIAPHRAGM VA. : VD/VDL0 * DAMPER : VP * QUICK COUPLING : SQC * FLEXIBLE JOINT(STEEL) : FLXB * FLEXIBLE JOINT(RUBBER) : FLXR * FLEXIBLE JOINT(STEEL_PTFE LINED) : FLXL * FLEXIBLE HOSE : FLXH * STEAM TRAP : ST * SPRAY NOZZLE : SPN * EMERGENCY SHOWER : SSH
* STRAINER(Y-TYPE) : YSTR * STRAINER(T-TYPE) : TSTR * STRAINER(BUCKET-TYPE) : BSTR * ANCHOR PLATE : STOP * BIRD SCREEN : BS * ISOLATION KIT : IK * UNLOADING BOX : UB * AIR TRAP : AT * LOTO : LOTO * SIGHT GLASS : SG * PRESSURE GAUGE : PG * SHILED : SH * SPECIAL BOLT & NUT : BL/BL1

CLIENT: SK hynix

8

INSULATION	CODE	N	CONDITION	PRESS. (kg/cm2g)	TEMP. (°C)
	THICK.	–	DESIGN	1	60
			OPERATING	ATM	AMB

AREA: W14
UNIT: 2FA
REF. PLAN DWG.: CJ-M15W14-PI-A30-020011-H
REF. P & ID: CJ-M15W14-PR-A20-000315

REV. NO.	DATE	DESCRIPTION	BY	CHK	APP'D
0	24.12.20	APPROVED FOR CONSTRUCTION	황래종	안남후	박동영

CONTRACTOR: SK ecoplant
PROJECT NAME: M15X Ph4 Project
COMMODITY: NaOCl
JOB NO.: 22330D
LINE NO.: OD32-NaOCl-PV3-N-7026
SH'T NO.: 01 / 01
REV.: 0

경고 : 본 도면은 SK HYNIX의 기업비밀 자료로서, 어떠한 경우에도 목적 외 사용, 복제, 제3자에게 공개, 누설 및 유출할 수 없으며, 회사는 유포자의 불법 사용으로 피해가 발생할 경우 유포자에게 민/형사상 책임을 요구할 수 있음.

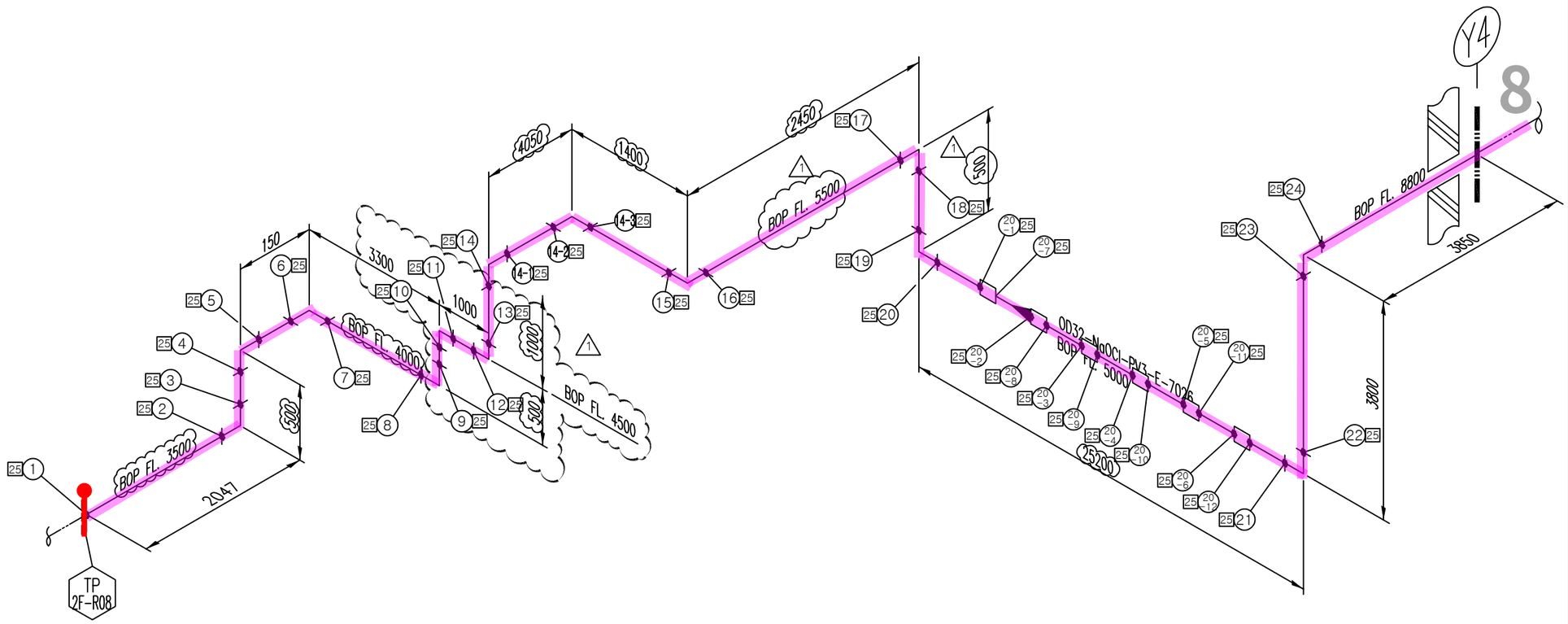

ITEM	SIZE	Q'TY	DESCRIPTION
PV3			
P	OD32	49.4M	PIPE, CPVC, PE, SOCKET FUSION, SDR13.5
E90	OD32	13EA	ELBOW 90 DEG, CPVC, PE, SOCKET FUSION, SDR13.5
F	OD32	1EA	FLG, KS 10K, FF, STUB FLG CPVC /
			BACKING RING(PP)+INSERT(STEEL), SDR13.5
INC	32tXOD32	49.4M	관 보온재(고무발포) + 알루미늄 CASING

<NOTE>
1. TRAY & ANGLE,CHANNEL SUPPORT가 적용되는 배관 ELEVATION은 현장 맞춤으로 한다.
2. (*) FIELD ADJUST

* PIPE : P/P1 * 90° ELBOW : E90 * 45° ELBOW : E45 * TEE : T * RED.TEE : TR * STUB-IN : STU * REINFORCING PAD : RP * CON.RED : RC * ECC.RED : RE * CON.SWAGE : RCS/RCS1 * ECC.SWAGE : RES/RES1 * NIPPLE : NP/NP1/NP2 * CAP : CAP/CAP1 * PLUG : PLG * FULL COUPLING : FC * HALF COUPLING : HF/HF1
* STUB-IN : STU * SOCKET(HDPE/PVC) : SC * SADDLE(HDPE) : SD * FLANGE : F/F1 * GASKET : G/G1/G2 * BOLT & NUT : B/B1 * BLIND FLANGE : FB/FB1 * GATE VA. : VG/VG1/VG2 * BALL VA. : VB/VBL0/VB1/VB1L0/VB2/VB2L0 * BUTTERFLY VA. : VF/VF4 * CHECK VA. : VC/VC1/VC2/VC3/VC4/VC5/VC6/VC7
* GLOBE VA. : VL/VL1/VL2 * DIAPHRAGM VA. : VD/VDL0 * DAMPER : VP * QUICK COUPLING : SQC * FLEXIBLE JOINT(STEEL) : FLXB * FLEXIBLE JOINT(RUBBER) : FLXR * FLEXIBLE JOINT(STEEL_PTFE LINED) : FLXL * FLEXIBLE HOSE : FLXH * STEAM TRAP : ST * SPRAY NOZZLE : SPN * EMERGENCY SHOWER : SSH
* STRAINER(Y-TYPE) : YSTR * STRAINER(T-TYPE) : TSTR * STRAINER(BUCKET-TYPE) : BSTR * ANCHOR PLATE : STOP * BIRD SCREEN : BS * ISOLATION KIT : IK * UNLOADING BOX : UB * AIR TRAP : AT * LOTO : LOTO * SIGHT GLASS : SG * PRESSURE GAUGE : PG * SHILED : SH * SPECIAL BOLT & NUT : BL/BL1

CLIENT SK hynix 9

INSULATION	CODE	E	CONDITION	PRESS. (kg/cm2g)	TEMP. (°C)
	THICK.	25	DESIGN	10	60
			OPERATING	7.5	AMB

AREA W14
UNIT R2FA
REF. PLAN DWG. CJ-M15W14-PI-A30-020016-C
REF. P & ID CJ-M15W14-PR-A20-000315,000507

REV. NO.	DATE	DESCRIPTION	BY	CHK	APP'D
1	25.03.31	REVISED AS MARKED	황래종	안남후	박동영
0	25.01.24	APPROVED FOR CONSTRUCTION	황래종	안남후	박동영

CONTRACTOR SK ecoplant
PROJECT NAME M15X Ph4 Project
COMMODITY NaOCl
JOB NO. 22330D
LINE NO. OD32-NaOCl-PV3-E-7026
SH'T NO. 01 / 01
REV. 1

경고 : 본 도면은 SK HYNIX의 기업비밀 자료로서, 어떠한 경우에도 목적 외 사용, 복제, 제3자에게 공개, 누설 및 유출할 수 없으며, 회사는 유포자의 불법 사용으로 피해가 발생할 경우 유포자에게 민/형사상 책임을 요구할 수 있음.

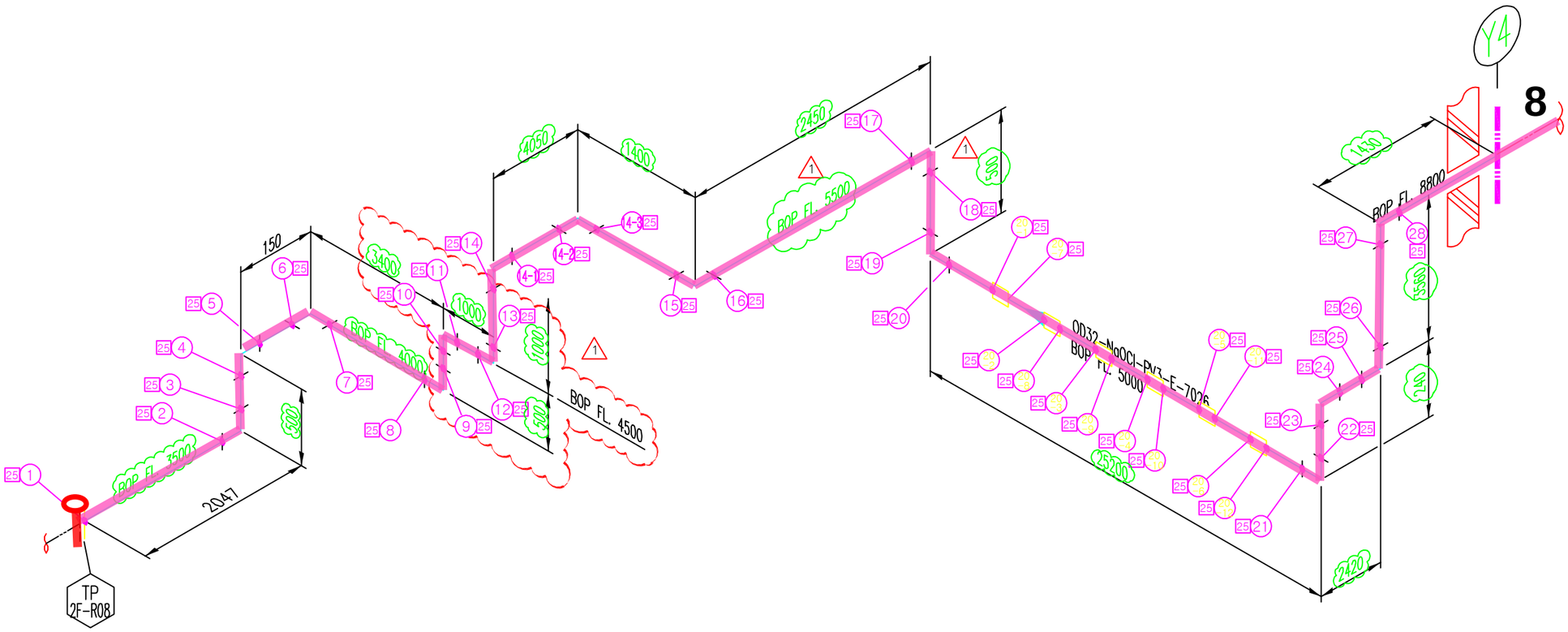

<NOTE>
1. TRAY & ANGLE,CHANNEL SUPPORT가 적용되는
배관 ELEVATION은 현장 맞춤으로 한다.
2. (*) FIELD ADJUST

ITEM	SIZE	Q'TY	DESCRIPTION
		PV3	
P	OD32	49.4M	PIPE, CPVC, PE, SOCKET FUSION, SDR13.5
E90	OD32	15EA	ELBOW 90 DEG, CPVC, PE, SOCKET FUSION, SDR13.5
F	OD32	1EA	FLG, KS 10K, FF, STUB FLG CPVC / BACKING RING(PP)+INSERT(STEEL), SDR13.5
INC	32tXOD32	49.4M	관 보온재(고무발포) + 알루미늄 CASING

* PIPE : P/P1 * 90° ELBOW : E90 * 45° ELBOW : E45 * TEE : T * RED.TEE : TR * STUB-IN : STU * REINFORCING PAD : RP * CON.RED : RC * ECC.RED : RE * CON.SWAGE : RCS/RCS1 * ECC.SWAGE : RES/RES1 * NIPPLE : NP/NP1/NP2 * CAP : CAP/CAP1 * PLUG : PLG * FULL COUPLING : FC * HALF COUPLING : HF/HF1
* STUB-IN : STU * SOCKET(HDPE/PVC) : SC * SADDLE(HDPE) : SD * FLANGE : F/F1 * GASKET : G/G1/G2 * BOLT & NUT : B/B1 * BLIND FLANGE : FB/FB1 * GATE VA. : VG/VG1/VG2 * BALL VA. : VB/VBL0/VB1/VB1L0/VB2/VB2L0 * BUTTERFLY VA. : VF/VF4 * CHECK VA. : VC/VC1/VC2/VC3/VC4/VC5/VC6/VC7
* GLOBE VA. : VL/VL1/VL2 * DIAPHRAGM VA. : VD/VDL0 * DAMPER : VP * QUICK COUPLING : SQC * FLEXIBLE JOINT(STEEL) : FLXB * FLEXIBLE JOINT(RUBBER) : FLXR * FLEXIBLE JOINT(STEEL_PTFE LINED) : FLXL * FLEXIBLE HOSE : FLXH * STEAM TRAP : ST * SPRAY NOZZLE : SPN * EMERGENCY SHOWER : SSH
* STRAINER(Y-TYPE) : YSTR * STRAINER(T-TYPE) : TSTR * STRAINER(BUCKET-TYPE) : BSTR * ANCHOR PLATE : STOP * BIRD SCREEN : BS * ISOLATION KIT : IK * UNLOADING BOX : UB * AIR TRAP : AT * LOTO : LOTO * SIGHT GLASS : SG * PRESSURE GAUGE : PG * SHILED : SH * SPECIAL BOLT & NUT : BL/BL1

CLIENT: SK hynix

9

INSULATION	CODE	E	CONDITION	PRESS. (kg/cm2g)	TEMP. (°C)
	THICK.	25	DESIGN	10	60
			OPERATING	7.5	AMB

AREA: W14
UNIT: R2FA
REF. PLAN DWG.: CJ-M15W14-PI-A30-020016-C
REF. P & ID: CJ-M15W14-PR-A20-000315,000507

REV. NO.	DATE	DESCRIPTION	BY	CHK	APP'D
1	25.03.31	REVISED AS MARKED	황래종	안남후	박동영
0	25.01.24	APPROVED FOR CONSTRUCTION	황래종	안남후	박동영

CONTRACTOR: SK ecoplant
COMMODITY: NaOCl
LINE NO.: OD32-NaOCl-PV3-E-7026

PROJECT NAME: M15X Ph4 Project
JOB NO.: 22330D
SH'T NO.: 01 / 01
REV.: 1

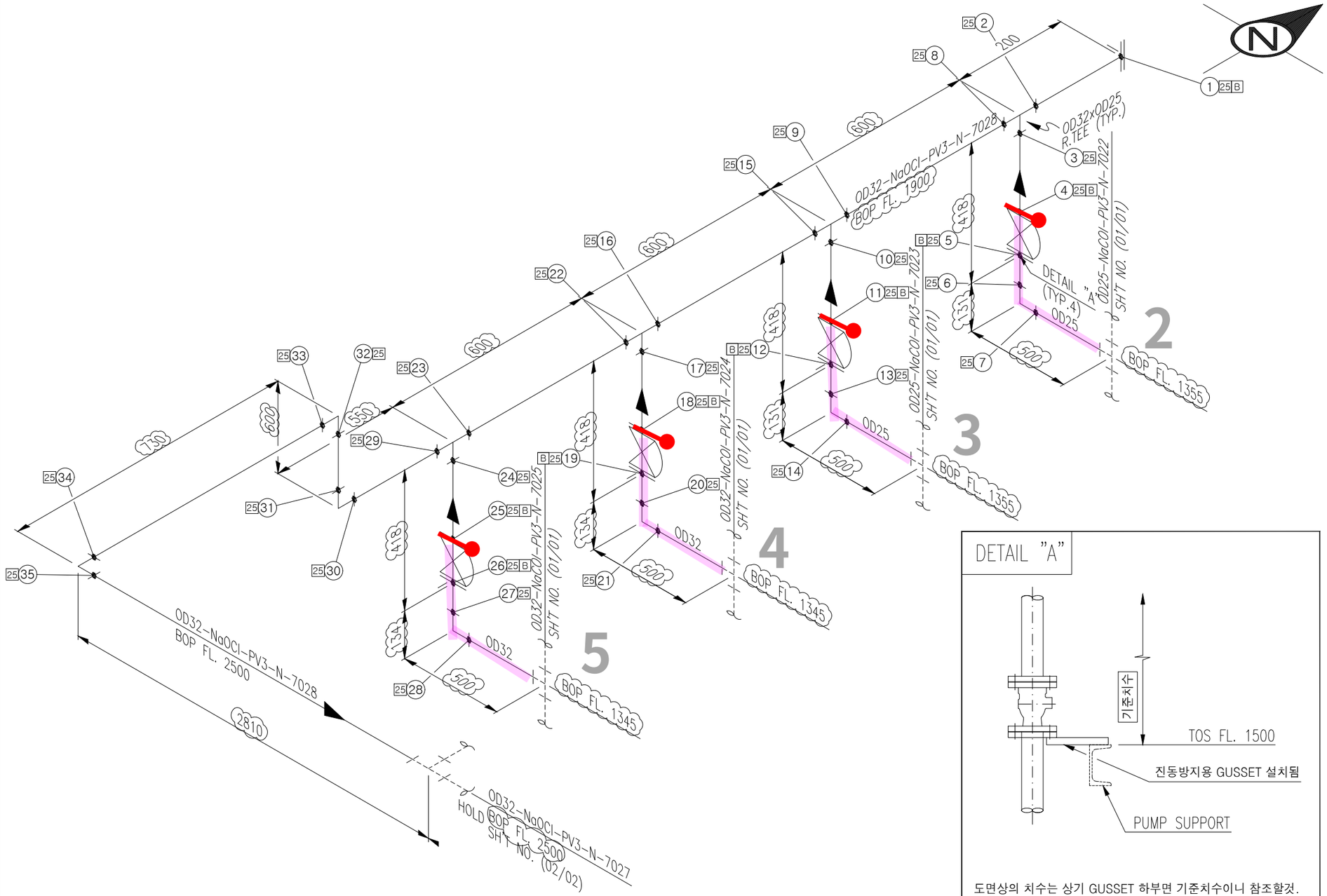

도면상의 치수는 상기 GUSSET 하부면 기준치수이니 참조할것.

<NOTE>
1. TRAY & ANGLE,CHANNEL SUPPORT가 적용되는 배관 ELEVATION은 현장 맞춤으로 한다.
2. (*) FIELD ADJUST

SK ecoplant

ITEM	SIZE	Q'TY	DESCRIPTION
		PV3	
P	OD32	8.8M	PIPE, CPVC, PE, SOCKET FUSION, SDR13.5
P	OD25	2.1M	PIPE, CPVC, PE, SOCKET FUSION, SDR13.5
E90	OD32	5EA	ELBOW 90 DEG, CPVC, PE, SOCKET FUSION, SDR13.5
E90	OD25	2EA	ELBOW 90 DEG, CPVC, PE, SOCKET FUSION, SDR13.5
T	OD32	2EA	TEE EQUAL, CPVC, PE, SOCKET FUSION, SDR13.5
TR	OD32xOD25	2EA	TEE RED, CPVC, PE, SOCKET FUSION, SDR13.5
VD	OD32	2EA	DIAPHRAGM VALVE, KS 10K, FF FLG'D, BODY-CPVC /
			TRIM-PDDM, BB, HW
VD	OD25	2EA	DIAPHRAGM VALVE, KS 10K, FF FLG'D, BODY-CPVC /
			TRIM-PDDM, BB, HW
F	OD32	5EA	FLG, KS 10K, FF, STUB FLG CPVC /
			BACKING RING(PP)+INSERT(STEEL), SDR13.5
F	OD25	4EA	FLG, KS 10K, FF, STUB FLG CPVC /
			BACKING RING(PP)+INSERT(STEEL), SDR13.5
FB	OD32	1EA	FLG BLIND, KS 10K, FF, CPVC, SDR13.5
G	OD32	5EA	GASKET, KS 10K, FF, PTFE+EPDM, 3.0MM TH'K
G	OD25	4EA	GASKET, KS 10K, FF, PTFE+EPDM, 3.0MM TH'K
B	OD32	5SET	MACHINE BOLT & NYLON NUT :STS 304 / W WASHERS
B	OD25	4SET	MACHINE BOLT & NYLON NUT :STS 304 / W WASHERS
SH	OD32	5EA	SHIELD
SH	OD25	4EA	SHIELD

* PIPE : P/P1 * 90° ELBOW : E90 * 45° ELBOW : E45 * TEE : T * RED.TEE : TR * STUB-IN : STU * REINFORCING PAD : RP * CON.RED : RC * ECC.RED : RE * CON.SWAGE : RCS/RCS1 * ECC.SWAGE : RES/RES1 * NIPPLE : NP/NP1/NP2 * CAP : CAP/CAP1 * PLUG : PLG * FULL COUPLING : FC * HALF COUPLING : HF/HF1
* STUB-IN : STU * SOCKET(HDPE/PVC) : SC * SADDLE(HDPE) : SD * FLANGE : F/F1 * GASKET : G/G1/G2 * BOLT & NUT : B/B1 * BLIND FLANGE : FB/FB1 * GATE VA. : VG/VG1/VG2 * BALL VA. : VB/VBLO/VB1/VB1LO/VB2/VB2LO * BUTTERFLY VA. : VF/VF4 * CHECK VA. : VC/VC1/VC2/VC3/VC4/VC5/VC6/VC7
* GLOBE VA. : VL/VL1/VL2 * DIAPHRAGM VA. : VD/VDLO * DAMPER : VP * QUICK COUPLING : SQC * FLEXIBLE JOINT(STEEL) : FLXB * FLEXIBLE JOINT(RUBBER) : FLXR * FLEXIBLE JOINT(STEEL_PTFE LINED) : FLXL * FLEXIBLE HOSE : FLXH * STEAM TRAP : ST * SPRAY NOZZLE : SPN * EMERGENCY SHOWER : SSH
* STRAINER(Y-TYPE) : YSTR * STRAINER(T-TYPE) : TSTR * STRAINER(BUCKET-TYPE) : BSTR * ANCHOR PLATE : STOP * BIRD SCREEN : BS * ISOLATION KIT : IK * UNLOADING BOX : UB * AIR TRAP : AT * LOTO : LOTO * SIGHT GLASS : SG * PRESSURE GAUGE : PG * SHILED : SH * SPECIAL BOLT & NUT : BL/BL1

CLIENT SK hynix

10

INSULATION	CODE	N	CONDITION	PRESS. (kg/cm2g)	TEMP. (°C)
	THICK.	–	DESIGN	3.3	60
			OPERATING	3.0	AMB

AREA W14
UNIT 4FA
REF. PLAN DWG. CJ-M15W14-PI-A30-040010-A
REF. P & ID CJ-M15W14-PR-A20-000315

REV. NO.	DATE	DESCRIPTION	BY	CHK	APP'D
0	25.01.24	APPROVED FOR CONSTRUCTION	황래종	안남후	박동영

CONTRACTOR SK ecoplant
PROJECT NAME M15X Ph4 Project
COMMODITY NaOCl
JOB NO. 22330D
LINE NO. OD32-NaOCl-PV3-N-7028
SH'T NO. 01 / 01
REV. 0

경고 : 본 도면은 SK HYNIX의 기업비밀 자료로서, 어떠한 경우에도 목적 외 사용, 복제, 제3자에게 공개, 누설 및 유출할 수 없으며, 회사는 유포자의 불법 사용으로 피해가 발생할 경우 유포자에게 민/형사상 책임을 요구할 수 있음.