DRAWING LIST FOR TEST PACKAGE

NAOH-655

PROJECT NO.: 22328D

PROJECT TITLE : M15X Ph2 Project

No	PKG No	UNIT	LINE NUMBER			P&ID		REMARK
			ISO DRAWING No	SHEET	REV	P&ID No	REV	
1	655	4FA	OD32-NaOH-HP2-N-6538-01	1 OF 2	0	CJ-M15W14-PR-A20-000155		
2	655	4FA	OD32-NaOH-HP2-N-6538-02	2 OF 2	0	CJ-M15W14-PR-A20-000155, 112		
3	655	4FA	OD32-NaOH-HP2-N-6539-01	1 OF 2	0	CJ-M15W14-PR-A20-000155		
4	655	4FA	OD32-NaOH-HP2-N-6539-02	2 OF 2	0	CJ-M15W14-PR-A20-000155, 114		
5	655	4FA	OD32-NaOH-HP2-N-6540-01	1 OF 1	0	CJ-M15W14-PR-A20-000155		
6	655	4FA	OD32-NaOH-HP2-N-6560-01	1 OF 1	0	CJ-M15W14-PR-A20-000112		
7	655	4FA	OD32-NaOH-HP2-N-6561-01	1 OF 1	0	CJ-M15W14-PR-A20-000114		
8	655	4FA	OD32-NaOH-HP2-N-6559-02	2 OF 2	0	CJ-M15W14-PR-A20-000155		
9								
10								
11								
12								

ITEM NO.		W14-T-4222 A
SERVICE		CIF MBR NEUTRALIZATION TANK
Q'TY		1
TYPE		RECTANGULAR
SIZE	W x L x H m	5.35 x 4.4 x 11.0 (EH 9.7)
CAPA.	m3	258.9 (EH 228) /1A
HRT	hr	0.4
MAT'L		P.C + FRP

ITEM NO.		W14-T-4223 A
SERVICE		CIF MBR 1'st ANOXIC TANK 1
Q'TY		1
TYPE		RECTANGULAR
SIZE	W x L x H m	17.35 x 4.4 x 11.0 (EH 9.7)
CAPA.	m3	829.7 (EH 740)
HRT	hr	1.2 /1A
MAT'L		P.C + FRP

ITEM NO.		W14-T-4224 A
SERVICE		CIF MBR 1'st ANOXIC TANK 2
Q'TY		1
TYPE		RECTANGULAR
SIZE	W x L x H m	17.2 x 4.4 x 11.0 (EH 9.7)
CAPA.	m3	832.5 (EH 734)
HRT	hr	1.2 /1A
MAT'L		P.C + FRP

ITEM NO.		W14-T-4225 A
SERVICE		CIF MBR 1'st OXIC TANK 1
Q'TY		1 /1A
TYPE		RECTANGULAR
SIZE	W x L x H m	11.25 x 4.75 x 11.0 (EH 9.4) 11.25 x 7.0 x 11.0 (EH 9.4) 11.25 x 6.575 x 11.0 (EH 9.4) 5.25 x 6.0 x 11.0 (EH 9.4)
CAPA.	m3	2,614.2 (EH 2,234) /1A
HRT	hr	3.6
MAT'L		P.C + FRP

ITEM NO.		W14-T-4226 A
SERVICE		CIF MBR 1'st OXIC TANK 2
Q'TY		1
TYPE		RECTANGULAR
SIZE	W x L x H m	5.05 x 11.225 x 11.0 (EH 9.4)
CAPA.	m3	623.5 (EH 533)
HRT	hr	0.9 /1A
MAT'L		P.C + FRP

ITEM NO.		W14-T-4227 A
SERVICE		CIF MBR 2'nd ANOXIC TANK 1
Q'TY		1
TYPE		RECTANGULAR
SIZE	W x L x H m	5.2 x 11.225 x 11.0 (EH 9.1)
CAPA.	m3	642.1 (EH 531)
HRT	hr	0.8 /1A
MAT'L		P.C + FRP

ITEM NO.		W14-T-4228 A
SERVICE		CIF MBR 2'nd ANOXIC TANK 2
Q'TY		1
TYPE		RECTANGULAR
SIZE	W x L x H m	5.225 x 6.325 x 11.0 (EH 9.1)
CAPA.	m3	363.5 (EH 301) /1A
HRT	hr	0.5
MAT'L		P.C + FRP

ITEM NO.		W14-AD-4225 A
SERVICE		CIF MBR 1'st OXIC TANK AIR DIFFUSER 1
Q'TY	ea	356 /1A
TYPE		MEMBRANE (TUBE)
CAPA.	L/min.ea	350
MAT'L		PP + EPDM

ITEM NO.		W14-AD-4226 A
SERVICE		CIF MBR 1'st OXIC TANK AIR DIFFUSER 2
Q'TY	ea	112 /1A
TYPE		MEMBRANE (DISC)
CAPA.	L/min.ea	100
MAT'L		PP + EPDM

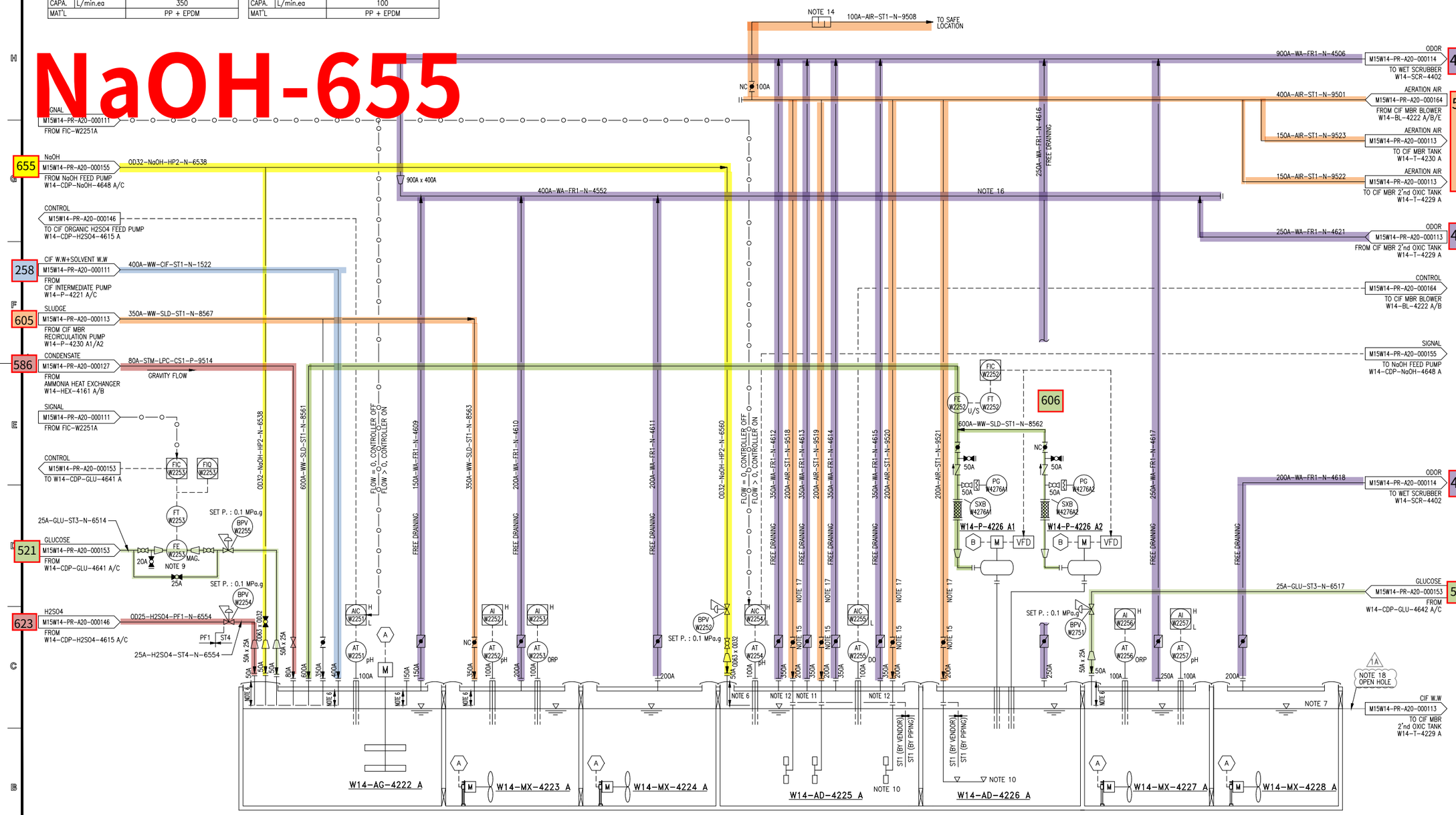

W14-T-4222 A	W14-T-4223 A	W14-T-4224 A	W14-T-4225 A	W14-T-4226 A	W14-T-4227 A	W14-T-4228 A

ITEM NO.		W14-AG-4222 A
SERVICE		CIF MBR NEUTRALIZATION AGITATOR
Q'TY		1 /1A
TYPE		HYDRO PADDLE NOTE 8
SPEED	rpm	24 /1A
MAT'L		STS316L/STS316L
POWER	kW	7.5 /1A

ITEM NO.		W14-MX-4223 A
SERVICE		CIF MBR 1'st ANOXIC MIXER 1
Q'TY		1 /1A
TYPE		SUBMERSIBLE
SPEED	rpm	300 /1A
MAT'L		STS431/STS304
POWER	kW	11 /1A

ITEM NO.		W14-MX-4224 A
SERVICE		CIF MBR 1'st ANOXIC MIXER 2
Q'TY		1 /1A
TYPE		SUBMERSIBLE
SPEED	rpm	300 /1A
MAT'L		STS431/STS304
POWER	kW	11 /1A

ITEM NO.		W14-P-4226 A1/A2
SERVICE		CIF MBR SLUDGE INNER RECYCLE PUMP
Q'TY		1 + 1 /1A
TYPE		VERTICAL (VWF)
CAPA.	m3/hr.ea x mH	1,875 x 10 (0.10MPa) /1A
MAT'L		SSC13/SSC13
POWER	kW	90 /1A

ITEM NO.		W14-MX-4227 A
SERVICE		CIF MBR 2'nd ANOXIC MIXER 1
Q'TY		1 /1A
TYPE		SUBMERSIBLE
SPEED	rpm	BY VENDOR
MAT'L		STS431/STS304
POWER	kW	11 /1A

ITEM NO.		W14-MX-4228 A
SERVICE		CIF MBR 2'nd ANOXIC MIXER 2
Q'TY		1 /1A
TYPE		SUBMERSIBLE
SPEED	rpm	BY VENDOR
MAT'L		STS431/STS304
POWER	kW	5.5 /1A

KEY PLAN (3F)

NOTE

1. TANK의 HWL 이하로 연결되는 모든 배관은 BLOCK 밸브 설치할 것.
2. 2m 이상 높은 곳에 설치된 밸브는 CHAIN VALVE 또는 PLATFORM 구성할 것.
3. MANHOLE SIZE : 1000W x 1000L x 2EA/TANK MANHOLE COVER : FRP
4. 운전 시 CLOSE 되는 배관에는 LOTO 설치.
5. AGITATOR MAT'L 표기 : SHAFT/BLADE
6. TANK 내 유입시, 육안 확인이 가능하고, 비산이 되지 않도록 최소 깊이로 반영 할 것. (SLAB로부터 100mm 떨어질 것)
7. 내부 FRP LINING TANK의 SLEEVE는 SUS304 + FRP LINING 적용.
8. 추후 VENDOR 에서 결정한다.
9. INSTRUMENT VENDOR 선정 후 CONTROL SCHEME 및 CONTROL VALVE INLET / OUTLET NOZZLE SIZE 조정 예정.
10. CIF 1'st/2'nd OXIC TANK는 선회류 포기가 되도록 배열 되어야하나, 건물의적화에 따른 산기관 설치공간 부족으로 M15X PH4 WWT에는 적용 안함.
11. 1차 호기조 내 AIR 확인이 가능하도록 중간지점에 점검구 반영할 것.
12. 1차 호기조 내 pH, DO 계측기의 설치 위치는 중간 지점보다 입측에 설치할 것.
13. CENTRIFUGAL PUMP MAT'L 표기 : CASING / IMPELLER
14. LOOSE SUPPLY INSTALLATION BY PURCHASER.
15. AIR량 조정을 위해 GEAR OPERATED BUTTERFLY VALVE를 적용한다.
16. 밀하기 배관 구성 및 배관 NUMBER는 도면번호 W14-PR-A20-000168을 기준으로 한다.
17. 유체의 흐름을 확인할 수 있도록 LINE 상에 PRESSURE GAUGE를 설치할 것. (TAG NO. 이래 참조)

15A PG WXXXX

- 200A-AIR-ST1-N-9518 : PG-W2254
- 200A-AIR-ST1-N-9519 : PG-W2255
- 200A-AIR-ST1-N-9520 : PG-W2256
- 200A-AIR-ST1-N-9521 : PG-W2257

18. OPENING SIZE IS 3,500mm x 1,600mm /1A

REV.	수정 DESCRIPTION	날짜 DATE
1A	REVISED AFC	25.08.14
1	REVISED AFC	25.01.17
0	APPROVAL FOR CONSTRUCTION	24.09.30

제도 DRAWN BY	이 인 학
검토 CHECKED BY	한 진 희
승인 APPROVED BY	박 동 영
제작사	SK 에코플랜트
공사명 PROJECT TITLE	M15X Ph4 WWT Project
도면명 DWG. TITLE	PIPING & INSTRUMENT DIAGRAM CIF MBR ANOXIC & OXIC TANK A (1/2)
축척 SCALE	NONE
날짜 DATE	2025. 08. 14
PROJECT NO.	22330D
REV.	1A
도면번호 SHEET NO.	CJ-M15W14-PR-A20-000112

C:₩Users₩TOPW₩Desktop₩P&ID251013₩[M15X Ph-4 for 인허가]CAD FILE_0910₩CJ-M15W14-PR-A20-000112 R1 P&ID FOR CIF M

NaOH-655

ITEM NO.	W14-T-4222 B	W14-T-4223 B	W14-T-4224 B	W14-T-4225 B	W14-T-4226 B	W14-T-4227 B	W14-T-4228 B
SERVICE	CIF MBR NEUTRALIZATION TANK	CIF MBR 1'st ANOXIC TANK 1	CIF MBR 1'st ANOXIC TANK 2	CIF MBR 1'st OXIC TANK 1	CIF MBR 1'st OXIC TANK 2	CIF MBR 2'nd ANOXIC TANK 1	CIF MBR 2'nd ANOXIC TANK 2
Q'TY	1	1	1	1	1	1	1
TYPE	RECTANGULAR	RECTANGULAR	RECTANGULAR	RECTANGULAR	RECTANGULAR	RECTANGULAR	RECTANGULAR
SIZE W x L x H m	5.375 x 5.25 x 11.0 (EH 9.7)	17.5 x 5.25 x 11.0 (EH 9.7)	17.375 x 5.25 x 11.0 (EH 9.7)	41.25 x 5.0 x 11.0 (EH 9.4)	11.225 x 5.4 x 11.0 (EH 9.4)	11.35 x 5.275 x 11.0 (EH 9.1)	5.35 x 5.275 x 11.0 (EH 9.1)
CAPA. m3	310.4 (EH 274)	1,010.6 (EH 891)	1,003.4 (EH 885)	2,268.8 (EH 1,939)	666.8 (EH 570)	658.6 (EH 545)	310.4 (EH 257)
HRT hr	0.4 (1A)	1.4 (1A)	1.4 (1A)	3.1 (1A)	0.9 (1A)	0.9 (1A)	0.4 (1A)
MAT'L	P.C + FRP	P.C + FRP	P.C + FRP	P.C + FRP	P.C + FRP	P.C + FRP	P.C + FRP

ITEM NO.	W14-AD-4225 B	W14-AD-4226 B
SERVICE	CIF MBR 1'st OXIC TANK AIR DIFFUSER 1	CIF MBR 1'st OXIC TANK AIR DIFFUSER 2
Q'TY ea	356 (1A)	112 (1A)
TYPE	MEMBRANE (TUBE)	MEMBRANE (TUBE)
CAPA. L/min.ea	350	350
MAT'L	PP + EPDM	PP + EPDM

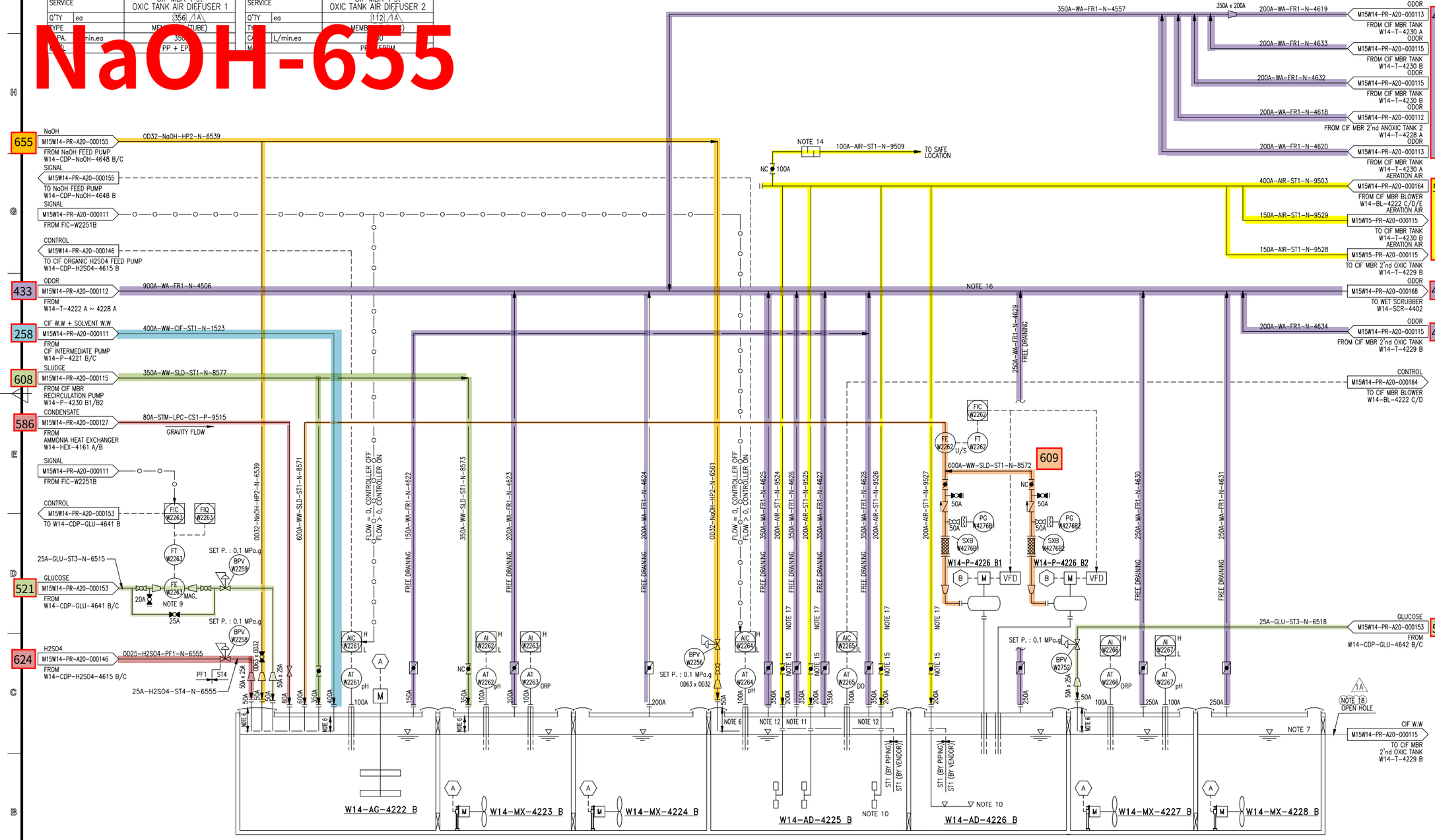

W14-T-4222 B	W14-T-4223 B	W14-T-4224 B	W14-T-4225 B	W14-T-4226 B	W14-T-4227 B	W14-T-4228 B

ITEM NO.	W14-AG-4222 B	W14-MX-4223 B	W14-MX-4224 B	W14-P-4226 B1/B2	W14-MX-4227 B	W14-MX-4228 B
SERVICE	CIF MBR NEUTRALIZATION AGITATOR	CIF MBR 1'st ANOXIC MIXER 1	CIF MBR 1'st ANOXIC MIXER 2	CIF MBR SLUDGE INNER RECYCLE PUMP	CIF MBR 2'nd ANOXIC MIXER 1	CIF MBR 2'nd ANOXIC MIXER 2
Q'TY	1	1 (1A)	1 (1A)	1 + 1	1 (1A)	1 (1A)
TYPE	HYDRO PADDLE NOTE 8	SUBMERSIBLE	SUBMERSIBLE	VERTICAL (VWF)	SUBMERSIBLE	SUBMERSIBLE
SPEED rpm	24 (1A)	300 (1A)	300 (1A)		900 (1A)	1200 (1A)
CAPA. m3/hr.ea x mH				1,875 x 10 (0.10MPa)		
MAT'L	STS316L/STS316L	STS431/STS304	STS431/STS304	SSC13/SSC13	STS431/STS304	STS431/STS304
POWER kW	7.5 (1A)	11 (1A)	11 (1A)	90 (1A)	11 (1A)	5.5 (1A)

대외비

KEY PLAN (3F)

433 NOTE

1. TANK의 HWL 이하로 연결되는 모든 배관은 BLOCK 밸브 설치할 것.
2. 2m 이상 높은 곳에 설치된 밸브는 CHAIN VALVE 또는 PLATFORM 구성할 것.
3. MANHOLE SIZE : 1000W x 1000L x 2EA/TANK
   MANHOLE COVER : FRP
4. 운전 시 CLOSE 되는 배관에는 LOTO 설치.
5. AGITATOR MAT'L 표기 : SHAFT/BLADE
6. TANK 내 유입시, 육안 확인이 가능하고, 비산이 되지 않도록 적은 깊이로 반영 할 것.
   (SLAB로부터 100mm 떨어질 것)
7. 내부 FRP LINING TANK의 SLEEVE는 SUS304 + FRP LINING 적용.
8. 추후 VENDOR 에서 결정한다.

583

9. INSTRUMENT VENDOR 선정 후 CONTROL SCHEME 및 CONTROL VALVE INLET / OUTLET NOZZLE SIZE 확정 예정.
10. CIF 1'st/2'nd OXIC TANK는 선회류 포기가 되도록 배열 해야하나, 건물최적화에 따른 산기관 설치공간 부족으로 M15X PH4 WWT에는 적용 안함.
11. 1차 호기조 내 AIR 확인이 가능하도록 중간지점에 점검구 반영할 것.
12. 1차 호기조 내 pH, DO 계측기의 설치 위치는 중간 지점보다 앞쪽에 설치할 것.

433

13. CENTRIFUGAL PUMP
    MAT'L 표기 : CASING / IMPELLER
14. LOOSE SUPPLY INSTALLATION BY PURCHASER.
15. AIR량 조정을 위해 GEAR OPERATED BUTTERFLY VALVE를 적용한다.

433

16. 밀리기 배관 구성 및 배관 NUMBER는 도면번호 W14-PR-A20-000168을 기준으로 한다.
17. 유체의 흐름을 확인할 수 있도록 LINE 상에 PRESSURE GAUGE를 설치할 것. (TAG NO. 이래 참조)

PG 15A WXXXX

- 200A-AIR-ST1-N-9524 : PG-W2264
- 200A-AIR-ST1-N-9525 : PG-W2265
- 200A-AIR-ST1-N-9526 : PG-W2266
- 200A-AIR-ST1-N-9527 : PG-W2267

18. OPENING SIZE IS 3,500mm x 1,600mm (1A)

REV.	수정	설 명 DESCRIPTION	날 짜 DATE
1A		REVISED AFC	25.08.14
1		REVISED AFC	25.01.17
0		APPROVAL FOR CONSTRUCTION	24.09.30

제 도 DRAWN BY	이 인 락
검 토 CHECKED BY	한 진 희
승 인 APPROVED BY	박 동 영
제 작 사	SK 에코플랜트
공 사 명 PROJECT TITLE	M15X Ph4 WWT Project
도면명 DWG. TITLE	PIPING & INSTRUMENT DIAGRAM CIF MBR ANOXIC & OXIC TANK B (2/2)
축 척 SCALE	NONE
날 짜 DATE	2025. 08. 14
PROJECT NO.	22330D
도면번호 SHEET NO.	CJ-M15W14-PR-A20-000114
REV.	1A

A1(594x841mm ±2mm)

C:WUsersWTOPWDesktopWP&ID251013W[M15X Ph-4 for 인허가]CAD FILE_0910WCJ-M15W14-PR-A20-000114 R1 P&ID FOR CIF M

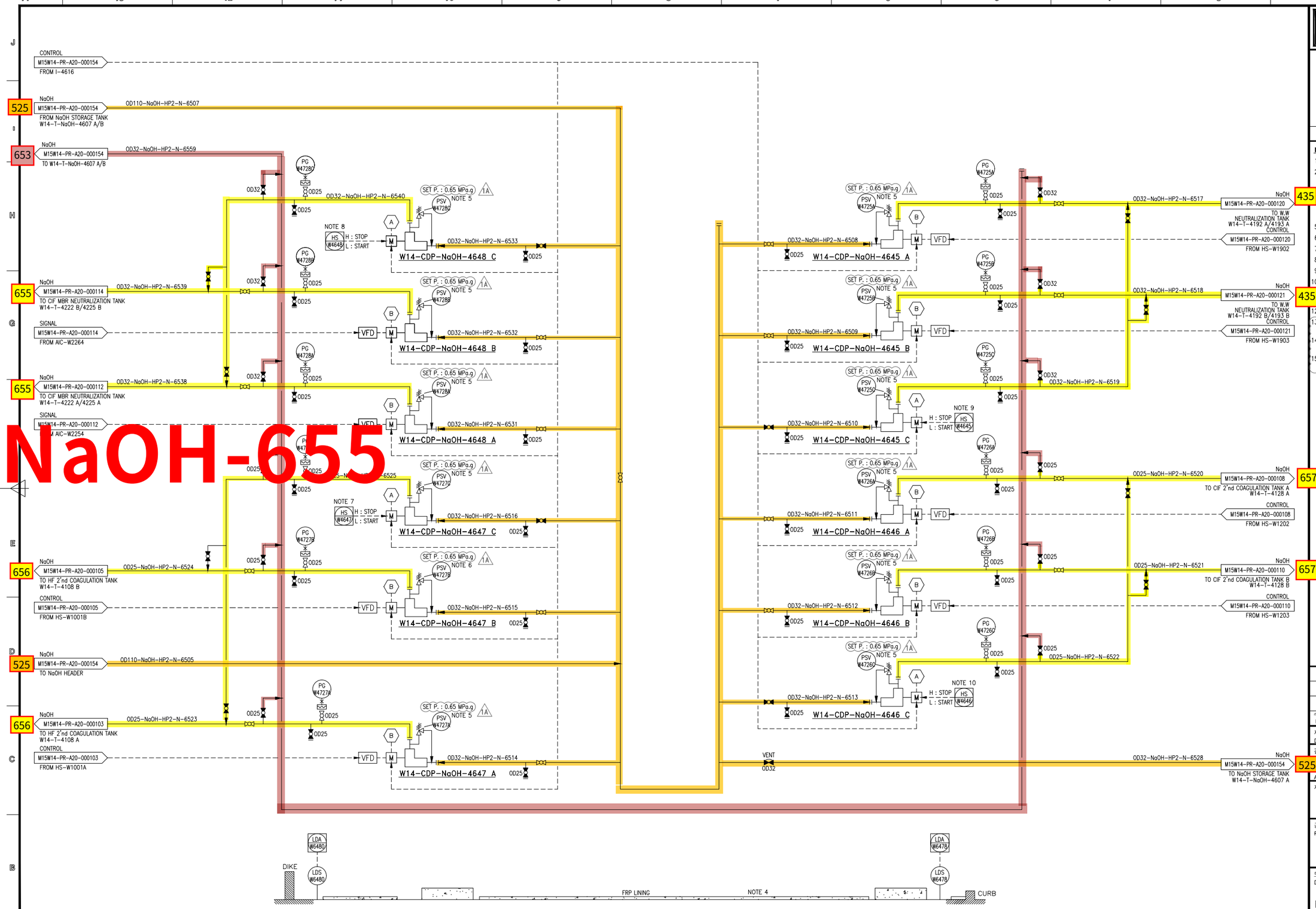

ITEM NO.	W14-CDP-NaOH-4645 A/B/C
SERVICE	W.W NaOH FEED PUMP
Q'TY	2 + 1
TYPE	DIAPHRAGM
CAPA. l/min.ea x MPa	MAX. 11.2 x MAX 0.7 NOTE 13
MAT'L	PVDF/PTFE/CERAMIC
POWER kW	0.75

ITEM NO.	W14-CDP-NaOH-4646 A/B/C
SERVICE	CIF 2'nd NaOH FEED PUMP
Q'TY	2 + 1
TYPE	DIAPHRAGM
CAPA. l/min.ea x MPa	MAX. 11.2 x MAX 0.7 NOTE 14
MAT'L	PVDF/PTFE/CERAMIC
POWER kW	0.75

ITEM NO.	W14-CDP-NaOH-4647 A/B/C
SERVICE	HF 2'nd NaOH FEED PUMP
Q'TY	2 + 1
TYPE	DIAPHRAGM
CAPA. l/min.ea x MPa	MAX. 11.2 x MAX 0.7 NOTE 15
MAT'L	PVDF/PTFE/CERAMIC
POWER kW	0.75

ITEM NO.	W14-CDP-NaOH-4648 A/B/C
SERVICE	CIF ORGANIC NaOH FEED PUMP
Q'TY	2 + 1
TYPE	DIAPHRAGM
CAPA. l/min.ea x MPa	MAX. 11.2 x MAX 0.7 NOTE 13
MAT'L	PVDF/PTFE/CERAMIC
POWER kW	0.75

대외비

KEY PLAN (4F)

NOTE

1. 온전 시 CLOSE 되는 배관에는 LOTO 설치.
2. DIAPHRAGM PUMP MAT'L 표기 : HEAD / DIAPHRAGM/ CHECK BALL
3. 약품종류에 따라 LINE 색상을 구분하여야 한다.
4. CHEMICAL STORAGE TANK & PUMP CURB에서 발생되는 DRAIN은 인근의 TRENCH로 집수되어, DRAIN HEADER로 이송된다.
5. PUMP VENDOR 공급.
6. NaOH LINE에 위치한 VALVE에 LOTO 적용.
7. HS-W1001A, W1001B 중 선택운전.
8. AIC-W2254, W2264 중 선택운전.
9. HS-W1902, W1903 중 선택운전.
10. HS-W1202, W1203 중 선택운전.
11. 모든 가성소다 배관의 LEAK POINT에는 비산 방지용 SHIELD 및 SENSING TAPE 설치할 것.
12. 가성소다 펌프 AREA에는 비산방지막을 설치한다.
13. OPERATING CAPACITY : 10 LPM
    OPERATING PRESSURE : 0.59 MPa
14. OPERATING CAPACITY : 8 LPM
    OPERATING PRESSURE : 0.59 MPa
15. OPERATING CAPACITY : 7 LPM
    OPERATING PRESSURE : 0.59 MPa

REV.	DESCRIPTION	DATE
1A	REVISED AFC	25.08.14
1	REVISED AFC	25.01.17
0	APPROVAL FOR CONSTRUCTION	24.09.30

제 도 DRAWN BY	이 인 학
검 토 CHECKED BY	한 진 희
인 APPROVED BY	박 동 영
제 작 사	SK 에코플랜트
공 사 명 PROJECT TITLE	M15X Ph4 WWT Project
도면명 DWG. TITLE	PIPING & INSTRUMENT DIAGRAM NaOH STORAGE TANK & FEED PUMP (2/2)
축 척 SCALE	NONE
날 짜 DATE	2025. 08. 14
PROJECT NO.	22330D
도면번호 SHEET NO.	CJ-M15W14-PR-A20-000155
REV.	1A

A1(594x841mm ±2mm)

C:WUsersWTOPWDesktopWP&ID251013W[M15X Ph-4 for 인허가]CAD FILE_0910WCJ-M15W14-PR-A20-000155 R1 P&ID FOR NaOH

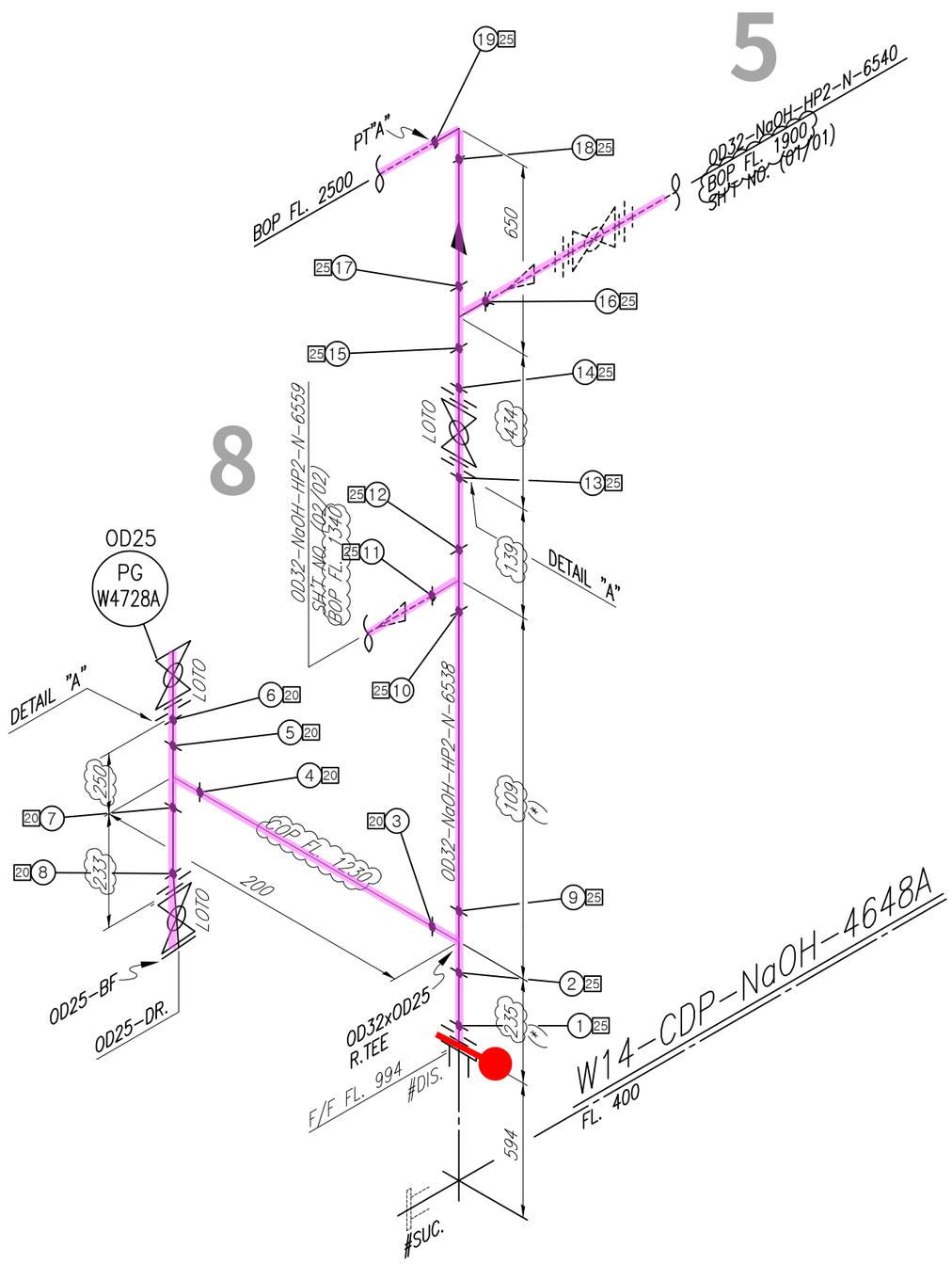

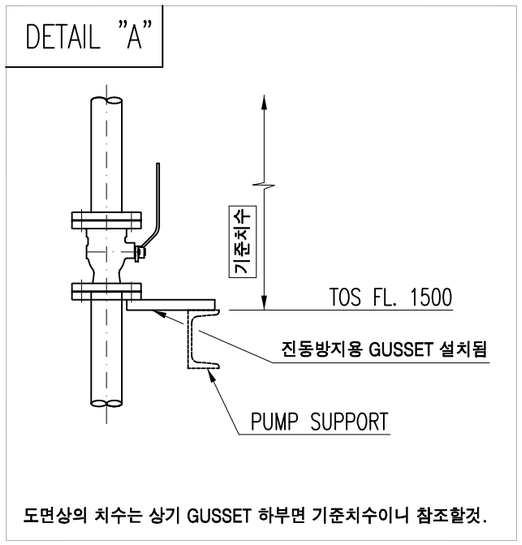

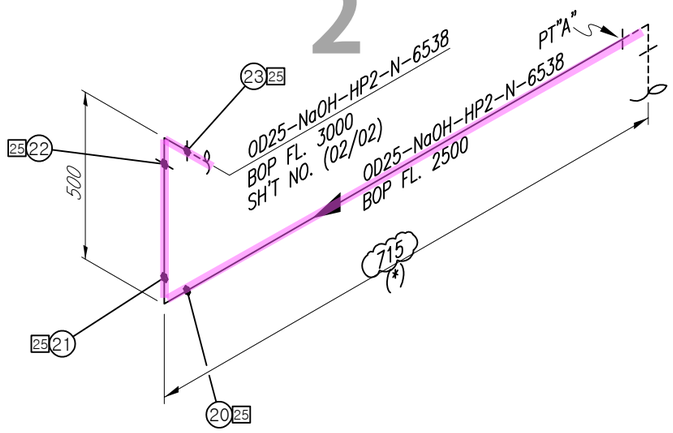

<NOTE>
1. TRAY & ANGLE,CHANNEL SUPPORT가 적용되는 배관 ELEVATION은 현장 맞춤으로 한다.
2. (*) FIELD ADJUST

ITEM	SIZE	Q'TY	DESCRIPTION
		HP2	
P	OD32	3.2M	PIPE, HDPE PE100, PE, SOCKET FUSION, PN16/SDR11
P	OD25	0.6M	PIPE, HDPE PE100, PE, SOCKET FUSION, PN16/SDR11
E90	OD32	3EA	ELBOW 90 DEG, HDPE PE100, PE, SOCKET FUSION,
			PN16/SDR11
T	OD32	2EA	TEE EQUAL, HDPE PE100, PE, SOCKET FUSION, PN16/SDR11
T	OD25	1EA	TEE EQUAL, HDPE PE100, PE, SOCKET FUSION, PN16/SDR11
TR	OD32xOD25	1EA	TEE RED, HDPE PE100, PE, SOCKET FUSION, PN16/SDR11
F	OD32	3EA	FLG LAP JOINT / STUB END SET, KS 10K, FF,
			LAP JOINT-STS304 / STUB END-HDPE PE100
F	OD25	2EA	FLG LAP JOINT / STUB END SET, KS 10K, FF,
			LAP JOINT-STS304 / STUB END-HDPE PE100
FB	OD25	1EA	FLG BLIND & LINER SET, KS 10K, FF, BLIND-STS304
			/ LINDER-HDPE PE100 (MIN 5.0MM TH'K)
G	OD32	3EA	GASKET, KS 10K, FF, PTFE+EPDM, 3.0MM TH'K
G	OD25	2EA	GASKET, KS 10K, FF, PTFE+EPDM, 3.0MM TH'K
G2	OD25	1EA	GASKET, KS 10K, FF, PTFE+EPDM, BLIND, 3.0MM TH'K
B1	OD32	3SET	MACHINE BOLT & NYLON NUTS :STS 304 / W WASHERS
B1	OD25	3SET	MACHINE BOLT & NYLON NUTS :STS 304 / W WASHERS
VBLO	OD32	1EA	BALL VALVE, KS 10K, FF FLG'D, BODY-PP /
			TRIM-PP / SEAT-PTFE, FB, LEVER + LOTO
VBLO	OD25	2EA	BALL VALVE, KS 10K, FF FLG'D, BODY-PP /
			TRIM-PP / SEAT-PTFE, FB, LEVER + LOTO
SH	OD32	3EA	SHIELD
SH	OD25	3EA	SHIELD
PG	OD25	1EA	PRESSURE GAUGE, KS 10K, FF

* PIPE : P/P1 * 90° ELBOW : E90 * 45° ELBOW : E45 * TEE : T * RED.TEE : TR * STUB-IN : STU * REINFORCING PAD : RP * CON.RED : RC * ECC.RED : RE * CON.SWAGE : RCS/RCS1 * ECC.SWAGE : RES/RES1 * NIPPLE : NP/NP1/NP2 * CAP : CAP/CAP1 * PLUG : PLG * FULL COUPLING : FC * HALF COUPLING : HF/HF1
* STUB-IN : STU * SOCKET(HDPE/PVC) : SC * SADDLE(HDPE) : SD * FLANGE : F/F1 * GASKET : G/G1/G2 * BOLT & NUT : B/B1 * BLIND FLANGE : FB/FB1 * GATE VA. : VG/VG1/VG2 * BALL VA. : VB/VBLO/VB1/VB1LO/VB2/VB2LO * BUTTERFLY VA. : VF/VF4 * CHECK VA. : VC/VC1/VC2/VC3/VC4/VC5/VC6/VC7
* GLOBE VA. : VL/VL1/VL2 * DIAPHRAGM VA. : VD/VDLO * DAMPER : VP * QUICK COUPLING : SQC * FLEXIBLE JOINT(STEEL) : FLXB * FLEXIBLE JOINT(RUBBER) : FLXR * FLEXIBLE JOINT(STEEL_PTFE LINED) : FLXL * FLEXIBLE HOSE : FLXH * STEAM TRAP : ST * SPRAY NOZZLE : SPN * EMERGENCY SHOWER : SSH
* STRAINER(Y-TYPE) : YSTR * STRAINER(T-TYPE) : TSTR * STRAINER(BUCKET-TYPE) : BSTR * ANCHOR PLATE : STOP * BIRD SCREEN : BS * ISOLATION KIT : IK * UNLOADING BOX : UB * AIR TRAP : AT * LOTO : LOTO * SIGHT GLASS : SG * PRESSURE GAUGE : PG * SHILED : SH * SPECIAL BOLT & NUT : BL/BL1

CLIENT SK hynix

INSULATION	CODE	N	CONDITION	PRESS. (kg/cm2g)	TEMP. (°C)
	THICK.	–	DESIGN	6.8	60
			OPERATING	6.1	AMB

AREA W14
UNIT 4FA
REF. PLAN DWG. CJ-M15W14-PI-A30-040012-A
REF. P & ID CJ-M15W14-PR-A20-000155

REV. NO.	DATE	DESCRIPTION	BY	CHK	APP'D
1	25.03.31	REVISED AS MARKED	황래종	안남후	박동영
0	25.01.24	APPROVED FOR CONSTRUCTION	황래종	안남후	박동영

CONTRACTOR SK ecoplant
PROJECT NAME M15X Ph4 Project
COMMODITY NaOH
JOB NO. 22330D
LINE NO. OD32-NaOH-HP2-N-6538
SH'T NO. 01 / 02
REV. 1

경고 : 본 도면은 SK HYNIX의 기업비밀 자료로서, 어떠한 경우에도 목적 외 사용, 복제, 제3자에게 공개, 누설 및 유출할 수 없으며, 회사는 유포자의 불법 사용으로 피해가 발생할 경우 유포자에게 민/형사상 책임을 요구할 수 있음.

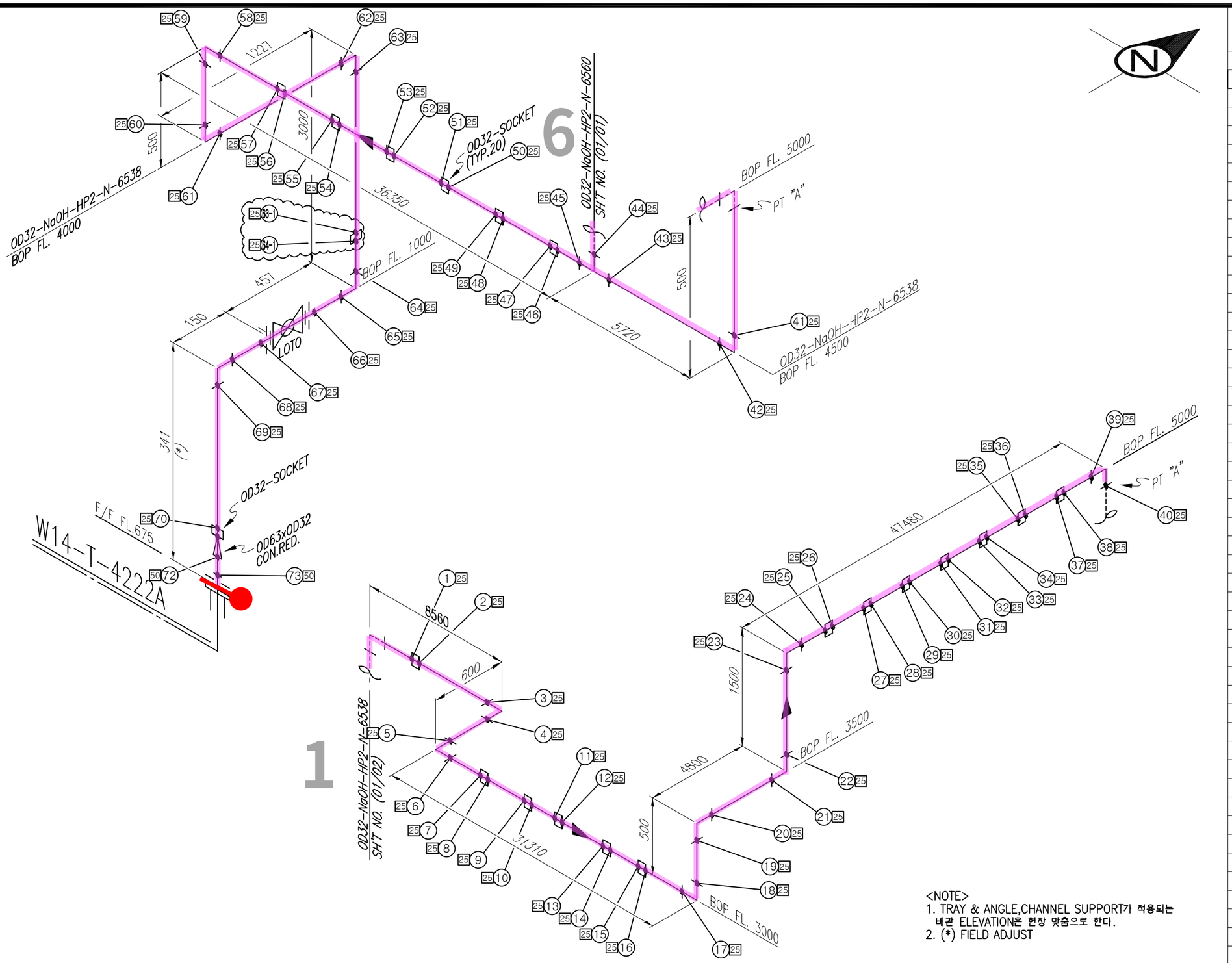

<NOTE>
1. TRAY & ANGLE,CHANNEL SUPPORT가 적용되는 배관 ELEVATION은 현장 맞춤으로 한다.
2. (*) FIELD ADJUST

ITEM	SIZE	Q'TY	DESCRIPTION
		HP2	
P	OD63	0.1M	PIPE, HDPE PE100, PE, SOCKET FUSION, PN16/SDR11
P	OD32	142.5M	PIPE, HDPE PE100, PE, SOCKET FUSION, PN16/SDR11
E90	OD32	13EA	ELBOW 90 DEG, HDPE PE100, PE, SOCKET FUSION,
			PN16/SDR11
T	OD32	1EA	TEE EQUAL, HDPE PE100, PE, SOCKET FUSION, PN16/SDR11
RC	OD63xOD32	1EA	REDUCER CON, HDPE PE100, PE, SOCKET FUSION,
			PN16/SDR11
SC	OD32	21EA	SOCKET, HDPE PE100, SOCKET FUSION, PN16/SDR11
VBLO	OD32	1EA	BALL VALVE, KS 10K, FF FLG'D, BODY-PP /
			TRIM-PP / SEAT-PTFE, FB, LEVER + LOTO
F	OD63	1EA	FLG LAP JOINT / STUB END SET, KS 10K, FF,
			LAP JOINT-STS304 / STUB END-HDPE PE100
F	OD32	2EA	FLG LAP JOINT / STUB END SET, KS 10K, FF,
			LAP JOINT-STS304 / STUB END-HDPE PE100
G	OD63	1EA	GASKET, KS 10K, FF, PTFE+EPDM, 3.0MM TH'K
G	OD32	2EA	GASKET, KS 10K, FF, PTFE+EPDM, 3.0MM TH'K
B1	OD63	1SET	MACHINE BOLT & NYLON NUTS :STS 304 / W WASHERS
B1	OD32	2SET	MACHINE BOLT & NYLON NUTS :STS 304 / W WASHERS
SH	OD63	1EA	SHIELD
SH	OD32	2EA	SHIELD

* PIPE : P/P1 * 90° ELBOW : E90 * 45° ELBOW : E45 * TEE : T * RED.TEE : TR * STUB-IN : STU * REINFORCING PAD : RP * CON.RED : RC * ECC.RED : RE * CON.SWAGE : RCS/RCS1 * ECC.SWAGE : RES/RES1 * NIPPLE : NP/NP1/NP2 * CAP : CAP/CAP1 * PLUG : PLG * FULL COUPLING : FC * HALF COUPLING : HF/HF1
* STUB-IN : STU * SOCKET(HDPE/PVC) : SC * SADDLE(HDPE) : SD * FLANGE : F/F1 * GASKET : G/G1/G2 * BOLT & NUT : B/B1 * BLIND FLANGE : FB/FB1 * GATE VA. : VG/VG1/VG2 * BALL VA. : VB/VBLO/VB1/VB1LO/VB2/VB2LO * BUTTERFLY VA. : VF/VF4 * CHECK VA. : VC/VC1/VC2/VC3/VC4/VC5/VC6/VC7
* GLOBE VA. : VL/VL1/VL2 * DIAPHRAGM VA. : VD/VDLO * DAMPER : VP * QUICK COUPLING : SQC * FLEXIBLE JOINT(STEEL) : FLXB * FLEXIBLE JOINT(RUBBER) : FLXR * FLEXIBLE JOINT(STEEL_PTFE LINED) : FLXL * FLEXIBLE HOSE : FLXH * STEAM TRAP : ST * SPRAY NOZZLE : SPN * EMERGENCY SHOWER : SSH
* STRAINER(Y-TYPE) : YSTR * STRAINER(T-TYPE) : TSTR * STRAINER(BUCKET-TYPE) : BSTR * ANCHOR PLATE : STOP * BIRD SCREEN : BS * ISOLATION KIT : IK * UNLOADING BOX : UB * AIR TRAP : AT * LOTO : LOTO * SIGHT GLASS : SG * PRESSURE GAUGE : PG * SHILED : SH * SPECIAL BOLT & NUT : BL/BL1

CLIENT: SK hynix

2

INSULATION	CODE	N	CONDITION	PRESS. (kg/cm2g)	TEMP. (°C)
	THICK.	–	DESIGN	6.8	60
			OPERATING	6.1	AMB

AREA: W14
UNIT: 4FA
REF. PLAN DWG.: CJ-M15W14-PI-A30-040009-A
REF. P & ID: CJ-M15W14-PR-A20-000155

REV. NO.	DATE	DESCRIPTION	BY	CHK	APP'D
1	25.03.31	REVISED AS MARKED	황래종	안남후	박동영
0	25.01.24	APPROVED FOR CONSTRUCTION	황래종	안남후	박동영

CONTRACTOR: SK ecoplant
PROJECT NAME: M15X Ph4 Project
COMMODITY: NaOH
JOB NO.: 22330D
LINE NO.: OD32-NaOH-HP2-N-6538
SH'T NO.: 02 / 02
REV.: 1

경고 : 본 도면은 SK HYNIX의 기업비밀 자료로서, 어떠한 경우에도 목적 외 사용, 복제, 제3자에게 공개, 누설 및 유출할 수 없으며, 회사는 유포자의 불법 사용으로 피해가 발생할 경우 유포자에게 민/형사상 책임을 요구할 수 있음.

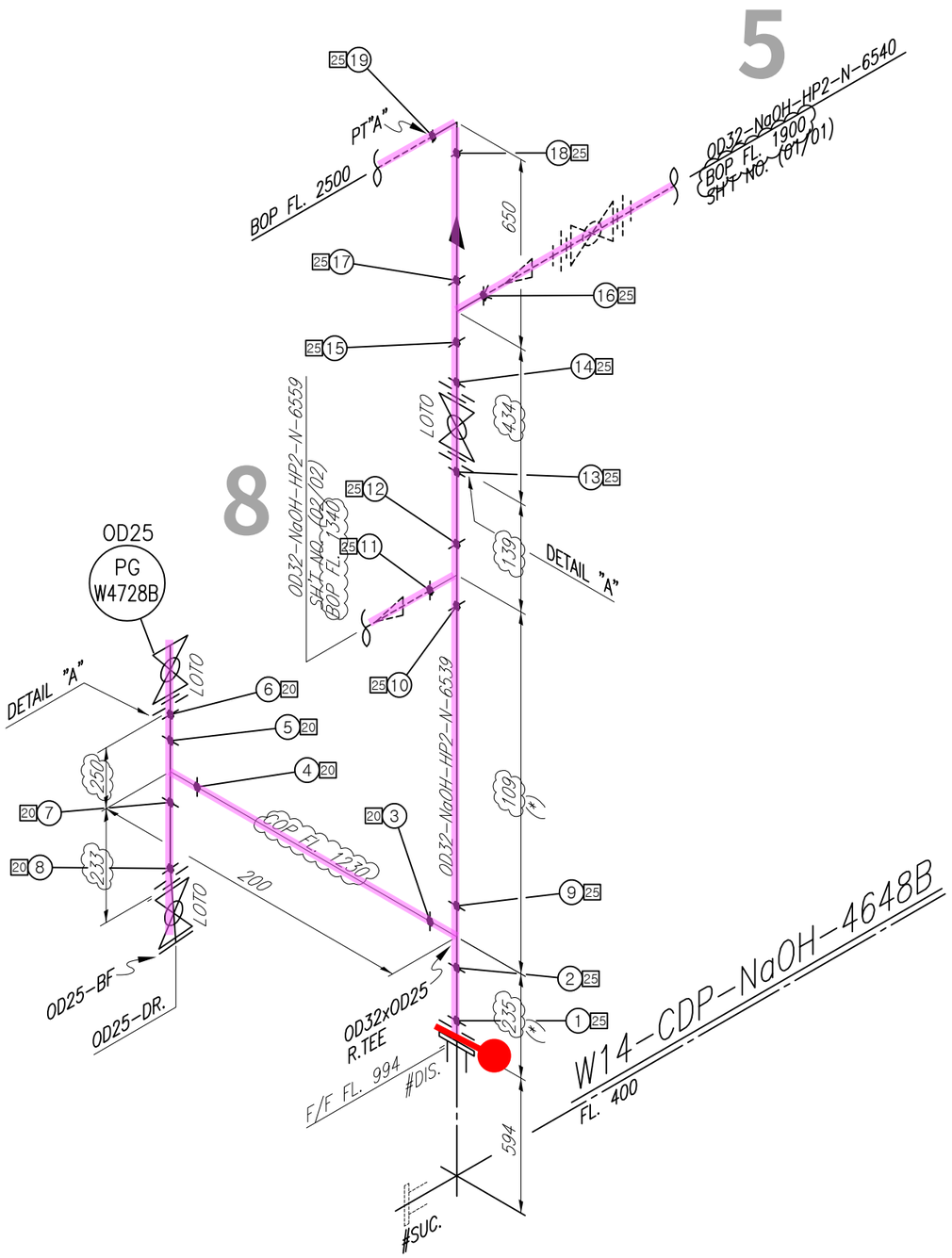

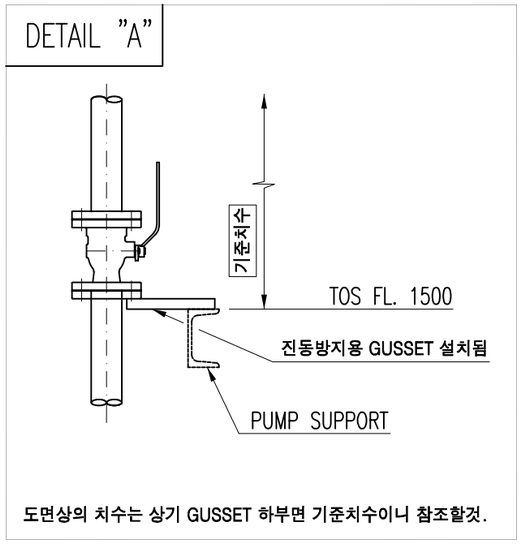

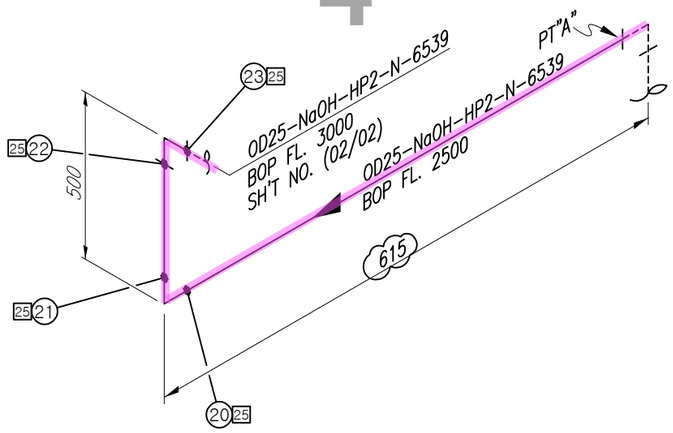

<NOTE>
1. TRAY & ANGLE,CHANNEL SUPPORT가 적용되는 배관 ELEVATION은 현장 맞춤으로 한다.
2. (*) FIELD ADJUST

SK ecoplant

ITEM	SIZE	Q'TY	DESCRIPTION
		HP2	
P	OD32	3.1M	PIPE, HDPE PE100, PE, SOCKET FUSION, PN16/SDR11
P	OD25	0.6M	PIPE, HDPE PE100, PE, SOCKET FUSION, PN16/SDR11
E90	OD32	3EA	ELBOW 90 DEG, HDPE PE100, PE, SOCKET FUSION,
			PN16/SDR11
T	OD32	2EA	TEE EQUAL, HDPE PE100, PE, SOCKET FUSION, PN16/SDR11
T	OD25	1EA	TEE EQUAL, HDPE PE100, PE, SOCKET FUSION, PN16/SDR11
TR	OD32xOD25	1EA	TEE RED, HDPE PE100, PE, SOCKET FUSION, PN16/SDR11
F	OD32	3EA	FLG LAP JOINT / STUB END SET, KS 10K, FF,
			LAP JOINT-STS304 / STUB END-HDPE PE100
F	OD25	2EA	FLG LAP JOINT / STUB END SET, KS 10K, FF,
			LAP JOINT-STS304 / STUB END-HDPE PE100
FB	OD25	1EA	FLG BLIND & LINER SET, KS 10K, FF, BLIND-STS304
			/ LINDER-HDPE PE100 (MIN 5.0MM TH'K)
G	OD32	3EA	GASKET, KS 10K, FF, PTFE+EPDM, 3.0MM TH'K
G	OD25	2EA	GASKET, KS 10K, FF, PTFE+EPDM, 3.0MM TH'K
G2	OD25	1EA	GASKET, KS 10K, FF, PTFE+EPDM, BLIND, 3.0MM TH'K
B1	OD32	3SET	MACHINE BOLT & NYLON NUTS :STS 304 / W WASHERS
B1	OD25	3SET	MACHINE BOLT & NYLON NUTS :STS 304 / W WASHERS
VBLO	OD32	1EA	BALL VALVE, KS 10K, FF FLG'D, BODY-PP /
			TRIM-PP / SEAT-PTFE, FB, LEVER + LOTO
VBLO	OD25	2EA	BALL VALVE, KS 10K, FF FLG'D, BODY-PP /
			TRIM-PP / SEAT-PTFE, FB, LEVER + LOTO
SH	OD32	3EA	SHIELD
SH	OD25	3EA	SHIELD
PG	OD25	1EA	PRESSURE GAUGE, KS 10K, FF

* PIPE : P/P1 * 90° ELBOW : E90 * 45° ELBOW : E45 * TEE : T * RED.TEE : TR * STUB-IN : STU * REINFORCING PAD : RP * CON.RED : RC * ECC.RED : RE * CON.SWAGE : RCS/RCS1 * ECC.SWAGE : RES/RES1 * NIPPLE : NP/NP1/NP2 * CAP : CAP/CAP1 * PLUG : PLG * FULL COUPLING : FC * HALF COUPLING : HF/HF1
* STUB-IN : STU * SOCKET(HDPE/PVC) : SC * SADDLE(HDPE) : SD * FLANGE : F/F1 * GASKET : G/G1/G2 * BOLT & NUT : B/B1 * BLIND FLANGE : FB/FB1 * GATE VA. : VG/VG1/VG2 * BALL VA. : VB/VBLO/VB1/VB1LO/VB2/VB2LO * BUTTERFLY VA. : VF/VF4 * CHECK VA. : VC/VC1/VC2/VC3/VC4/VC5/VC6/VC7
* GLOBE VA. : VL/VL1/VL2 * DIAPHRAGM VA. : VD/VDLO * DAMPER : VP * QUICK COUPLING : SQC * FLEXIBLE JOINT(STEEL) : FLXB * FLEXIBLE JOINT(RUBBER) : FLXR * FLEXIBLE JOINT(STEEL_PTFE LINED) : FLXL * FLEXIBLE HOSE : FLXH * STEAM TRAP : ST * SPRAY NOZZLE : SPN * EMERGENCY SHOWER : SSH
* STRAINER(Y-TYPE) : YSTR * STRAINER(T-TYPE) : TSTR * STRAINER(BUCKET-TYPE) : BSTR * ANCHOR PLATE : STOP * BIRD SCREEN : BS * ISOLATION KIT : IK * UNLOADING BOX : UB * AIR TRAP : AT * LOTO : LOTO * SIGHT GLASS : SG * PRESSURE GAUGE : PG * SHILED : SH * SPECIAL BOLT & NUT : BL/BL1

CLIENT SK hynix

3

INSULATION	CODE	N	CONDITION	PRESS. (kg/cm2g)	TEMP. (°C)
	THICK.	–	DESIGN	6.8	60
			OPERATING	6.1	AMB

AREA W14
UNIT 4FA
REF. PLAN DWG. CJ-M15W14-PI-A30-040012-A
REF. P & ID CJ-M15W14-PR-A20-000155

REV. NO.	DATE	DESCRIPTION	BY	CHK	APP'D
1	25.03.31	REVISEDD AS MARKED	황래종	안남후	박동영
0	25.01.24	APPROVED FOR CONSTRUCTION	황래종	안남후	박동영

CONTRACTOR SK ecoplant
COMMODITY NaOH
LINE NO. OD32-NaOH-HP2-N-6539
PROJECT NAME M15X Ph4 Project
JOB NO. 22330D
SH'T NO. 01 / 02
REV. 1

경고 : 본 도면은 SK HYNIX의 기업비밀 자료로서, 어떠한 경우에도 목적 외 사용, 복제, 제3자에게 공개, 누설 및 유출할 수 없으며, 회사는 유포자의 불법 사용으로 피해가 발생할 경우 유포자에게 민/형사상 책임을 요구할 수 있음.

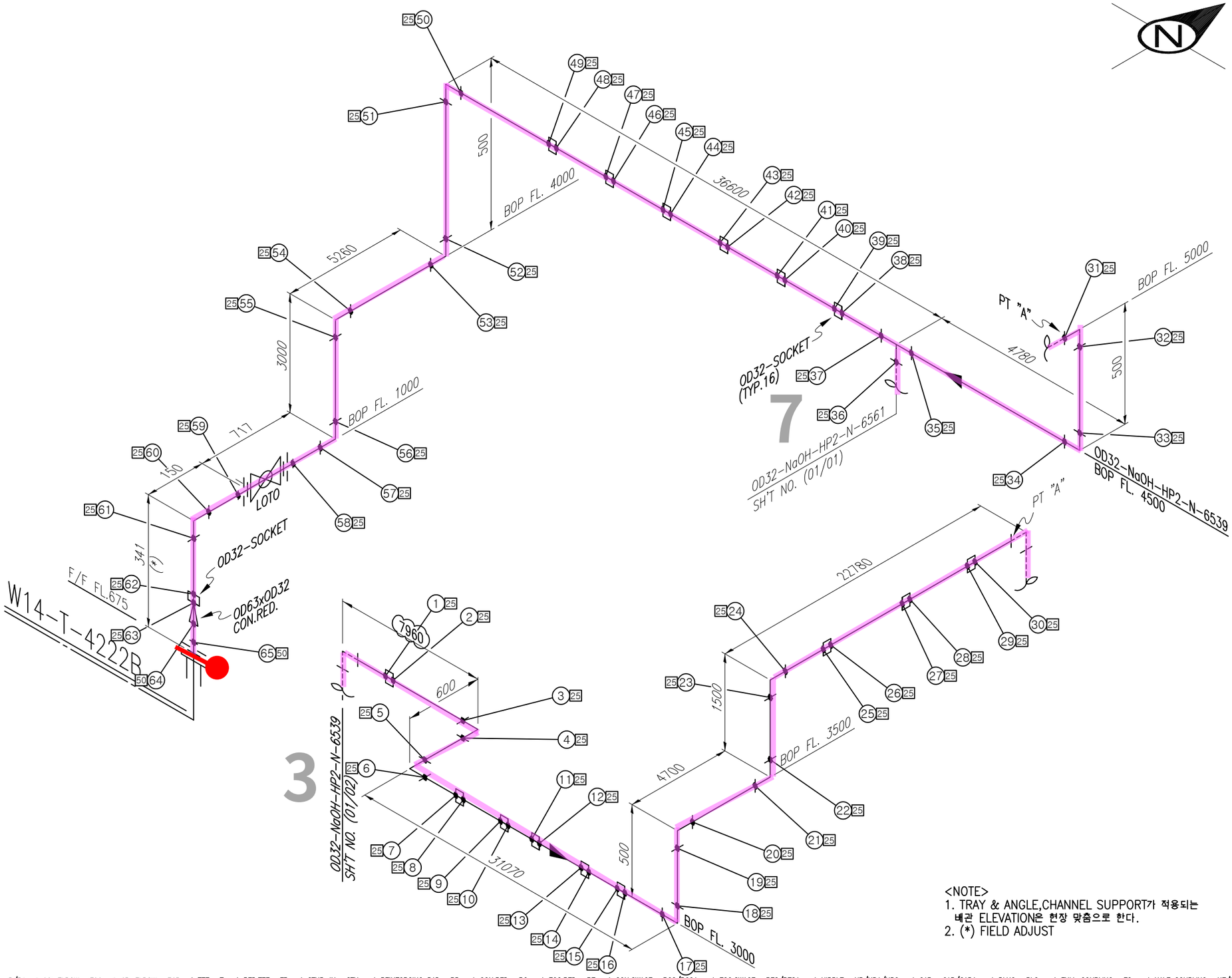

<NOTE>
1. TRAY & ANGLE,CHANNEL SUPPORT가 적용되는 배관 ELEVATION은 현장 맞춤으로 한다.
2. (*) FIELD ADJUST

SK ecoplant

ITEM	SIZE	Q'TY	DESCRIPTION
		HP2	
P	OD63	0.1M	PIPE, HDPE PE100, PE, SOCKET FUSION, PN16/SDR11
P	OD32	120.4M	PIPE, HDPE PE100, PE, SOCKET FUSION, PN16/SDR11
E90	OD32	13EA	ELBOW 90 DEG, HDPE PE100, PE, SOCKET FUSION,
			PN16/SDR11
T	OD32	1EA	TEE EQUAL, HDPE PE100, PE, SOCKET FUSION, PN16/SDR11
RC	OD63xOD32	1EA	REDUCER CON, HDPE PE100, PE, SOCKET FUSION,
			PN16/SDR11
SC	OD32	16EA	SOCKET, HDPE PE100, SOCKET FUSION, PN16/SDR11
VBLO	OD32	1EA	BALL VALVE, KS 10K, FF FLG'D, BODY-PP /
			TRIM-PP / SEAT-PTFE, FB, LEVER + LOTO
F	OD63	1EA	FLG LAP JOINT / STUB END SET, KS 10K, FF,
			LAP JOINT-STS304 / STUB END-HDPE PE100
F	OD32	2EA	FLG LAP JOINT / STUB END SET, KS 10K, FF,
			LAP JOINT-STS304 / STUB END-HDPE PE100
G	OD63	1EA	GASKET, KS 10K, FF, PTFE+EPDM, 3.0MM TH'K
G	OD32	2EA	GASKET, KS 10K, FF, PTFE+EPDM, 3.0MM TH'K
B1	OD63	1SET	MACHINE BOLT & NYLON NUTS :STS 304 / W WASHERS
B1	OD32	2SET	MACHINE BOLT & NYLON NUTS :STS 304 / W WASHERS
SH	OD63	1EA	SHIELD
SH	OD32	2EA	SHIELD

* PIPE : P/P1 * 90° ELBOW : E90 * 45° ELBOW : E45 * TEE : T * RED.TEE : TR * STUB-IN : STU * REINFORCING PAD : RP * CON.RED : RC * ECC.RED : RE * CON.SWAGE : RCS/RCS1 * ECC.SWAGE : RES/RES1 * NIPPLE : NP/NP1/NP2 * CAP : CAP/CAP1 * PLUG : PLG * FULL COUPLING : FC * HALF COUPLING : HF/HF1
* STUB-IN : STU * SOCKET(HDPE/PVC) : SC * SADDLE(HDPE) : SD * FLANGE : F/F1 * GASKET : G/G1/G2 * BOLT & NUT : B/B1 * BLIND FLANGE : FB/FB1 * GATE VA. : VG/VG1/VG2 * BALL VA. : VB/VBLO/VB1/VB1LO/VB2/VB2LO * BUTTERFLY VA. : VF/VF4 * CHECK VA. : VC/VC1/VC2/VC3/VC4/VC5/VC6/VC7
* GLOBE VA. : VL/VL1/VL2 * DIAPHRAGM VA. : VD/VDLO * DAMPER : VP * QUICK COUPLING : SQC * FLEXIBLE JOINT(STEEL) : FLXB * FLEXIBLE JOINT(RUBBER) : FLXR * FLEXIBLE JOINT(STEEL_PTFE LINED) : FLXL * FLEXIBLE HOSE : FLXH * STEAM TRAP : ST * SPRAY NOZZLE : SPN * EMERGENCY SHOWER : SSH
* STRAINER(Y-TYPE) : YSTR * STRAINER(T-TYPE) : TSTR * STRAINER(BUCKET-TYPE) : BSTR * ANCHOR PLATE : STOP * BIRD SCREEN : BS * ISOLATION KIT : IK * UNLOADING BOX : UB * AIR TRAP : AT * LOTO : LOTO * SIGHT GLASS : SG * PRESSURE GAUGE : PG * SHILED : SH * SPECIAL BOLT & NUT : BL/BL1

CLIENT SK hynix 4

INSULATION	CODE	N	CONDITION	PRESS. (kg/cm2g)	TEMP. (°C)
	THICK.	–	DESIGN	6.8	60
			OPERATING	6.1	AMB

AREA W14
UNIT 4FA
REF. PLAN DWG. CJ-M15W14-PI-A30-040009-A
REF. P & ID CJ-M15W14-PR-A20-000155

REV. NO.	DATE	DESCRIPTION	BY	CHK	APP'D
1	25.03.31	REVISED AS MARKED	황래종	안남후	박동영
0	25.01.24	APPROVED FOR CONSTRUCTION	황래종	안남후	박동영

CONTRACTOR SK ecoplant
PROJECT NAME M15X Ph4 Project
COMMODITY NaOH
JOB NO. 22330D
LINE NO. OD32-NaOH-HP2-N-6539
SH'T NO. 02 / 02
REV. 1

경고 : 본 도면은 SK HYNIX의 기업비밀 자료로서, 어떠한 경우에도 목적 외 사용, 복제, 제3자에게 공개, 누설 및 유출할 수 없으며, 회사는 유포자의 불법 사용으로 피해가 발생할 경우 유포자에게 민/형사상 책임을 요구할 수 있음.

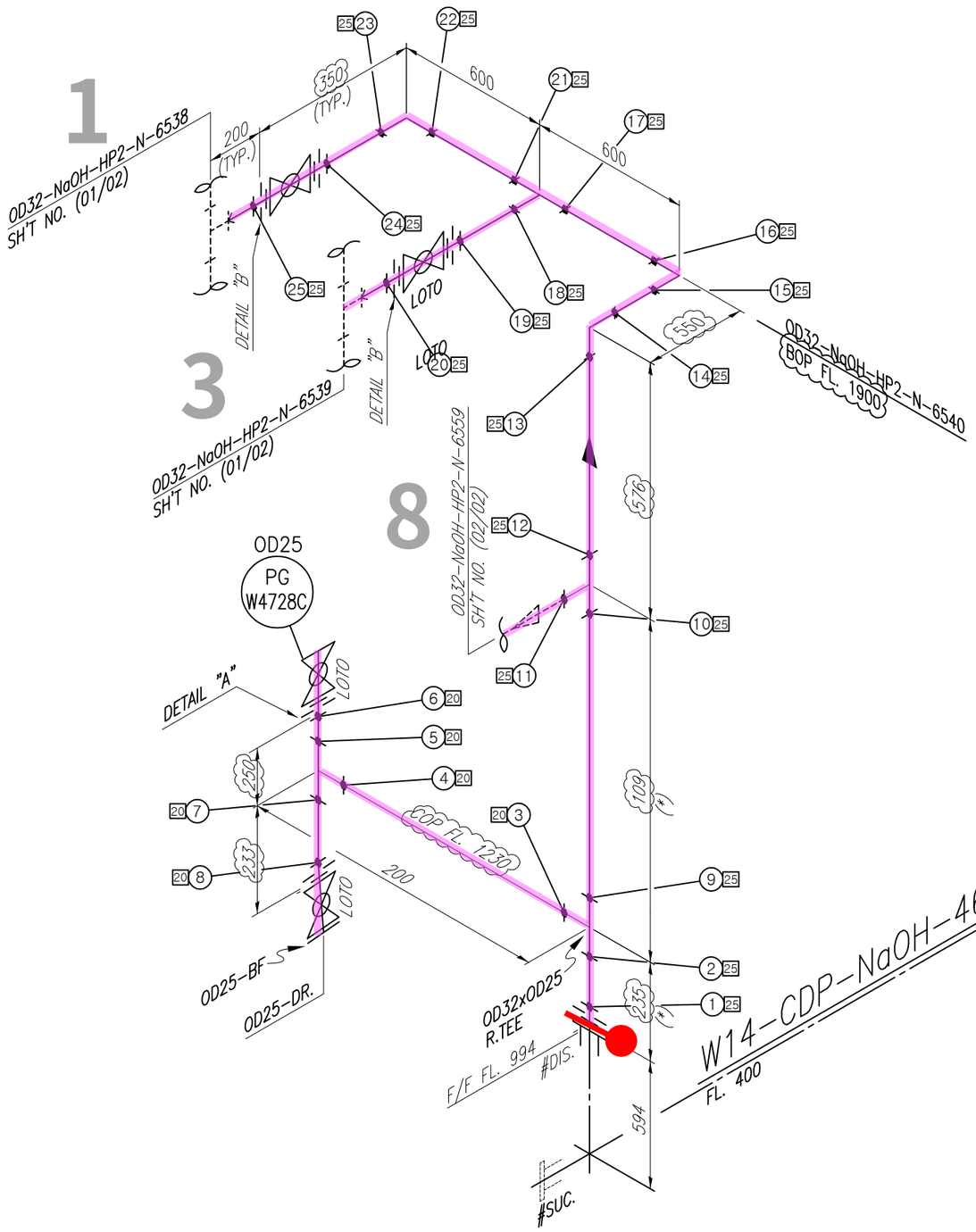

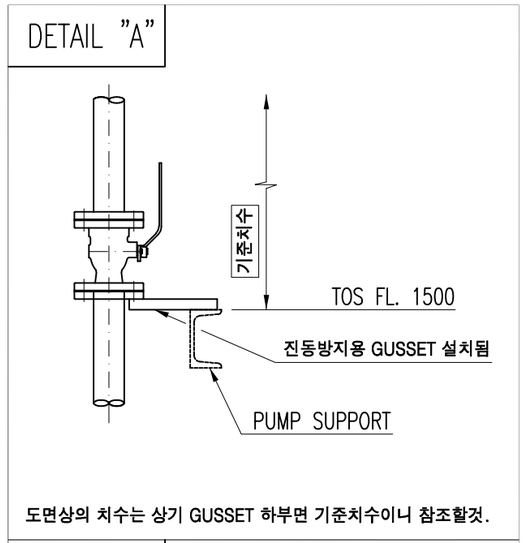

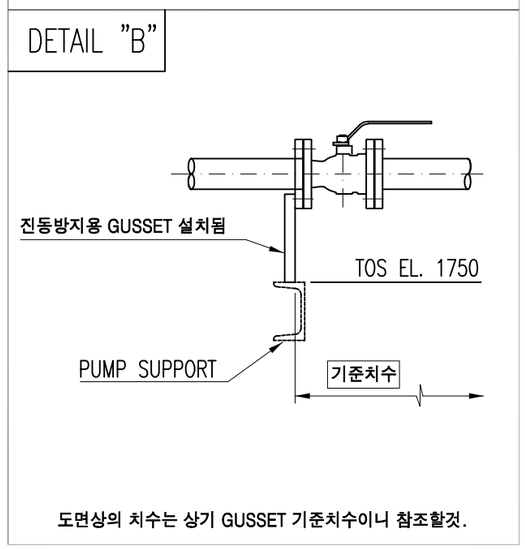

<NOTE>
1. TRAY & ANGLE,CHANNEL SUPPORT가 적용되는 배관 ELEVATION은 현장 맞춤으로 한다.
2. (*) FIELD ADJUST

SK ecoplant

ITEM	SIZE	Q'TY	DESCRIPTION
		HP2	
P	OD32	4.0M	PIPE, HDPE PE100, PE, SOCKET FUSION, PN16/SDR11
P	OD25	0.6M	PIPE, HDPE PE100, PE, SOCKET FUSION, PN16/SDR11
E90	OD32	3EA	ELBOW 90 DEG, HDPE PE100, PE, SOCKET FUSION,
			PN16/SDR11
T	OD32	2EA	TEE EQUAL, HDPE PE100, PE, SOCKET FUSION, PN16/SDR11
T	OD25	1EA	TEE EQUAL, HDPE PE100, PE, SOCKET FUSION, PN16/SDR11
TR	OD32xOD25	1EA	TEE RED, HDPE PE100, PE, SOCKET FUSION, PN16/SDR11
F	OD32	5EA	FLG LAP JOINT / STUB END SET, KS 10K, FF,
			LAP JOINT-STS304 / STUB END-HDPE PE100
F	OD25	2EA	FLG LAP JOINT / STUB END SET, KS 10K, FF,
			LAP JOINT-STS304 / STUB END-HDPE PE100
FB	OD25	1EA	FLG BLIND & LINER SET, KS 10K, FF, BLIND-STS304
			/ LINDER-HDPE PE100 (MIN 5.0MM TH'K)
G	OD32	5EA	GASKET, KS 10K, FF, PTFE+EPDM, 3.0MM TH'K
G	OD25	2EA	GASKET, KS 10K, FF, PTFE+EPDM, 3.0MM TH'K
G2	OD25	1EA	GASKET, KS 10K, FF, PTFE+EPDM, BLIND, 3.0MM TH'K
B1	OD32	5SET	MACHINE BOLT & NYLON NUTS :STS 304 / W WASHERS
B1	OD25	3SET	MACHINE BOLT & NYLON NUTS :STS 304 / W WASHERS
VBLO	OD32	2EA	BALL VALVE, KS 10K, FF FLG'D, BODY-PP /
			TRIM-PP / SEAT-PTFE, FB, LEVER + LOTO
VBLO	OD25	2EA	BALL VALVE, KS 10K, FF FLG'D, BODY-PP /
			TRIM-PP / SEAT-PTFE, FB, LEVER + LOTO
SH	OD32	5EA	SHIELD
SH	OD25	3EA	SHIELD
PG	OD25	1EA	PRESSURE GAUGE, KS 10K, FF

* PIPE : P/P1 * 90° ELBOW : E90 * 45° ELBOW : E45 * TEE : T * RED.TEE : TR * STUB-IN : STU * REINFORCING PAD : RP * CON.RED : RC * ECC.RED : RE * CON.SWAGE : RCS/RCS1 * ECC.SWAGE : RES/RES1 * NIPPLE : NP/NP1/NP2 * CAP : CAP/CAP1 * PLUG : PLG * FULL COUPLING : FC * HALF COUPLING : HF/HF1
* STUB-IN : STU * SOCKET(HDPE/PVC) : SC * SADDLE(HDPE) : SD * FLANGE : F/F1 * GASKET : G/G1/G2 * BOLT & NUT : B/B1 * BLIND FLANGE : FB/FB1 * GATE VA. : VG/VG1/VG2 * BALL VA. : VB/VBLO/VB1/VB1LO/VB2/VB2LO * BUTTERFLY VA. : VF/VF4 * CHECK VA. : VC/VC1/VC2/VC3/VC4/VC5/VC6/VC7
* GLOBE VA. : VL/VL1/VL2 * DIAPHRAGM VA. : VD/VDLO * DAMPER : VP * QUICK COUPLING : SQC * FLEXIBLE JOINT(STEEL) : FLXB * FLEXIBLE JOINT(RUBBER) : FLXR * FLEXIBLE JOINT(STEEL_PTFE LINED) : FLXL * FLEXIBLE HOSE : FLXH * STEAM TRAP : ST * SPRAY NOZZLE : SPN * EMERGENCY SHOWER : SSH
* STRAINER(Y-TYPE) : YSTR * STRAINER(T-TYPE) : TSTR * STRAINER(BUCKET-TYPE) : BSTR * ANCHOR PLATE : STOP * BIRD SCREEN : BS * ISOLATION KIT : IK * UNLOADING BOX : UB * AIR TRAP : AT * LOTO : LOTO * SIGHT GLASS : SG * PRESSURE GAUGE : PG * SHILED : SH * SPECIAL BOLT & NUT : BL/BL1

CLIENT SK hynix

5

INSULATION	CODE	N	CONDITION	PRESS. (kg/cm2g)	TEMP. (°C)
	THICK.	–	DESIGN	6.8	60
			OPERATING	6.1	AMB

AREA W14
UNIT 4FA
REF. PLAN DWG. CJ-M15W14-PI-A30-040012-A
REF. P & ID CJ-M15W14-PR-A20-000155

REV. NO.	DATE	DESCRIPTION	BY	CHK	APP'D
0	25.01.24	APPROVED FOR CONSTRUCTION	황래종	안남후	박동영

CONTRACTOR SK ecoplant
COMMODITY NaOH
LINE NO. OD32-NaOH-HP2-N-6540
PROJECT NAME M15X Ph4 Project
JOB NO. 22330D
SH'T NO. 01 / 01
REV. 0

경고 : 본 도면은 SK HYNIX의 기업비밀 자료로서, 어떠한 경우에도 목적 외 사용, 복제, 제3자에게 공개, 누설 및 유출할 수 없으며, 회사는 유포자의 불법 사용으로 피해가 발생할 경우 유포자에게 민/형사상 책임을 요구할 수 있음.

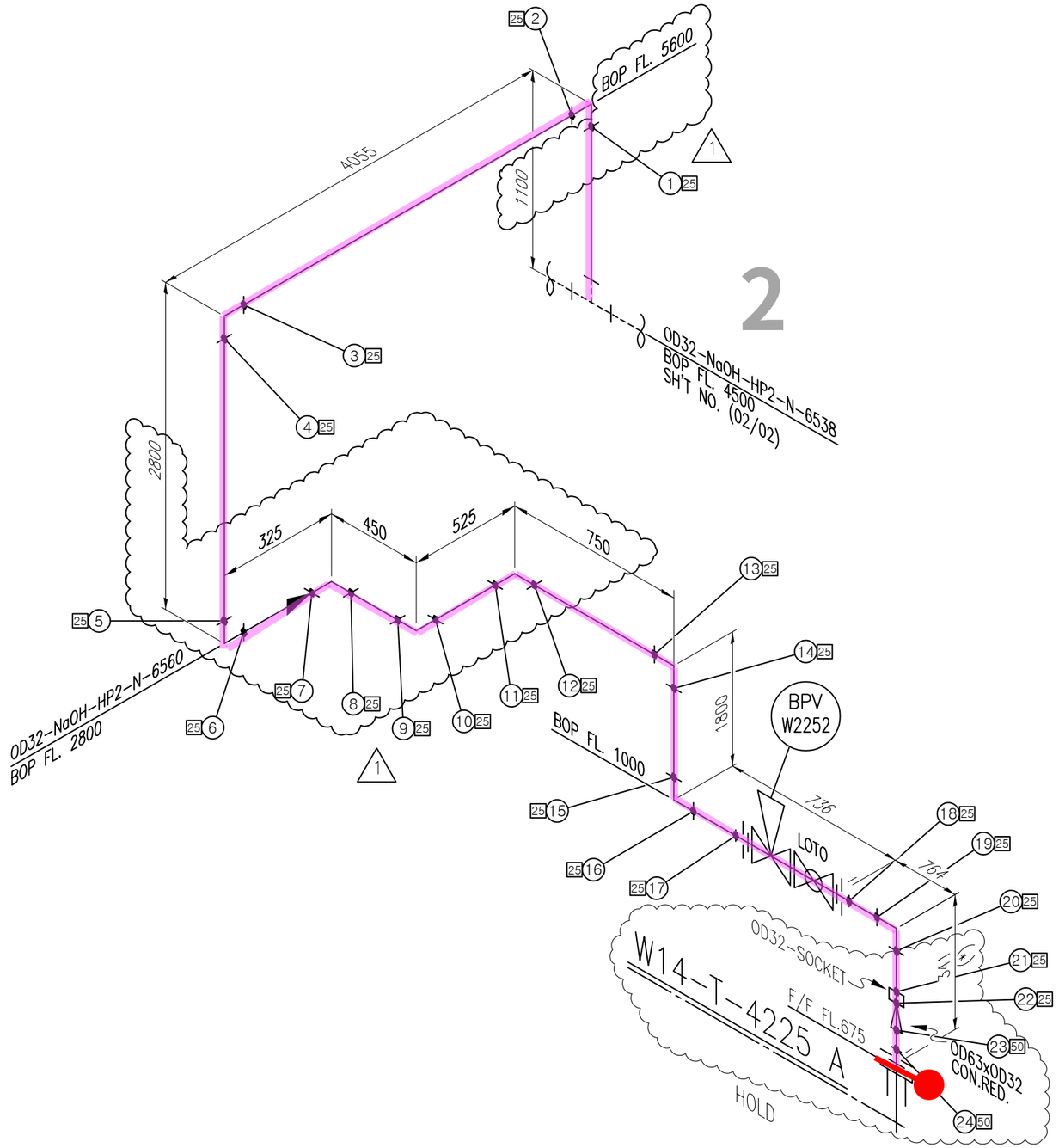

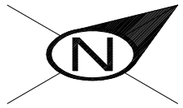

SK ecoplant

ITEM	SIZE	Q'TY	DESCRIPTION
		HP2	
P	OD63	0.1M	PIPE, HDPE PE100, PE, SOCKET FUSION, PN16/SDR11
P	OD32	14.0M	PIPE, HDPE PE100, PE, SOCKET FUSION, PN16/SDR11
E90	OD32	9EA	ELBOW 90 DEG, HDPE PE100, PE, SOCKET FUSION,
RC	OD63xOD32	1EA	REDUCER CON, HDPE PE100, PE, SOCKET FUSION,
			PN16/SDR11
SC	OD32	1EA	SOCKET, HDPE PE100, SOCKET FUSION, PN16/SDR11
VBLO	OD32	1EA	BALL VALVE, KS 10K, FF FLG'D, BODY-PP /
			TRIM-PP / SEAT-PTFE, FB, LEVER + LOTO
F	OD63	1EA	FLG LAP JOINT / STUB END SET, KS 10K, FF,
			LAP JOINT-STS304 / STUB END-HDPE PE100
F	OD32	2EA	FLG LAP JOINT / STUB END SET, KS 10K, FF,
			LAP JOINT-STS304 / STUB END-HDPE PE100
G	OD63	1EA	GASKET, KS 10K, FF, PTFE+EPDM, 3.0MM TH'K
G	OD32	3EA	GASKET, KS 10K, FF, PTFE+EPDM, 3.0MM TH'K
B1	OD63	1SET	MACHINE BOLT & NYLON NUTS :STS 304 / W WASHERS
B1	OD32	3SET	MACHINE BOLT & NYLON NUTS :STS 304 / W WASHERS
SH	OD63	1EA	SHIELD
SH	OD32	3EA	SHIELD
BPV	OD32	1EA	BACK PRESSURE VALVE

<NOTE>
1. TRAY & ANGLE,CHANNEL SUPPORT가 적용되는 배관 ELEVATION은 현장 맞춤으로 한다.
2. (*) FIELD ADJUST

* PIPE : P/P1 * 90° ELBOW : E90 * 45° ELBOW : E45 * TEE : T * RED.TEE : TR * STUB-IN : STU * REINFORCING PAD : RP * CON.RED : RC * ECC.RED : RE * CON.SWAGE : RCS/RCS1 * ECC.SWAGE : RES/RES1 * NIPPLE : NP/NP1/NP2 * CAP : CAP/CAP1 * PLUG : PLG * FULL COUPLING : FC * HALF COUPLING : HF/HF1
* STUB-IN : STU * SOCKET(HDPE/PVC) : SC * SADDLE(HDPE) : SD * FLANGE : F/F1 * GASKET : G/G1/G2 * BOLT & NUT : B/B1 * BLIND FLANGE : FB/FB1 * GATE VA. : VG/VG1/VG2 * BALL VA. : VB/VBL0/VB1/VB1L0/VB2/VB2L0 * BUTTERFLY VA. : VF/VF4 * CHECK VA. : VC/VC1/VC2/VC3/VC4/VC5/VC6/VC7
* GLOBE VA. : VL/VL1/VL2 * DIAPHRAGM VA. : VD/VDL0 * DAMPER : VP * QUICK COUPLING : SQC * FLEXIBLE JOINT(STEEL) : FLXB * FLEXIBLE JOINT(RUBBER) : FLXR * FLEXIBLE JOINT(STEEL_PTFE LINED) : FLXL * FLEXIBLE HOSE : FLXH * STEAM TRAP : ST * SPRAY NOZZLE : SPN * EMERGENCY SHOWER : SSH
* STRAINER(Y-TYPE) : YSTR * STRAINER(T-TYPE) : TSTR * STRAINER(BUCKET-TYPE) : BSTR * ANCHOR PLATE : STOP * BIRD SCREEN : BS * ISOLATION KIT : IK * UNLOADING BOX : UB * AIR TRAP : AT * LOTO : LOTO * SIGHT GLASS : SG * PRESSURE GAUGE : PG * SHILED : SH * SPECIAL BOLT & NUT : BL/BL1

CLIENT SK hynix

6

INSULATION	CODE	N	CONDITION	PRESS. (kg/cm2g)	TEMP. (°C)
	THICK.	–	DESIGN	6.8	60
			OPERATING	6.1	AMB

AREA W14
UNIT 4FA
REF. PLAN DWG. CJ-M15W14-PI-A30-040002-C
REF. P & ID CJ-M15W14-PR-A20-000112

REV. NO.	DATE	DESCRIPTION	BY	CHK	APP'D
1	25.03.31	REVISED AS MARKED	황래종	안남후	박동영
0	25.01.24	APPROVED FOR CONSTRUCTION	황래종	안남후	박동영

CONTRACTOR SK ecoplant
PROJECT NAME M15X Ph4 Project
COMMODITY NaOH
JOB NO. 22330D
LINE NO. OD32-NaOH-HP2-N-6560
SH'T NO. 01 / 01
REV. 1

경고 : 본 도면은 SK HYNIX의 기업비밀 자료로서, 어떠한 경우에도 목적 외 사용, 복제, 제3자에게 공개, 누설 및 유출할 수 없으며, 회사는 유포자의 불법 사용으로 피해가 발생할 경우 유포자에게 민/형사상 책임을 요구할 수 있음.

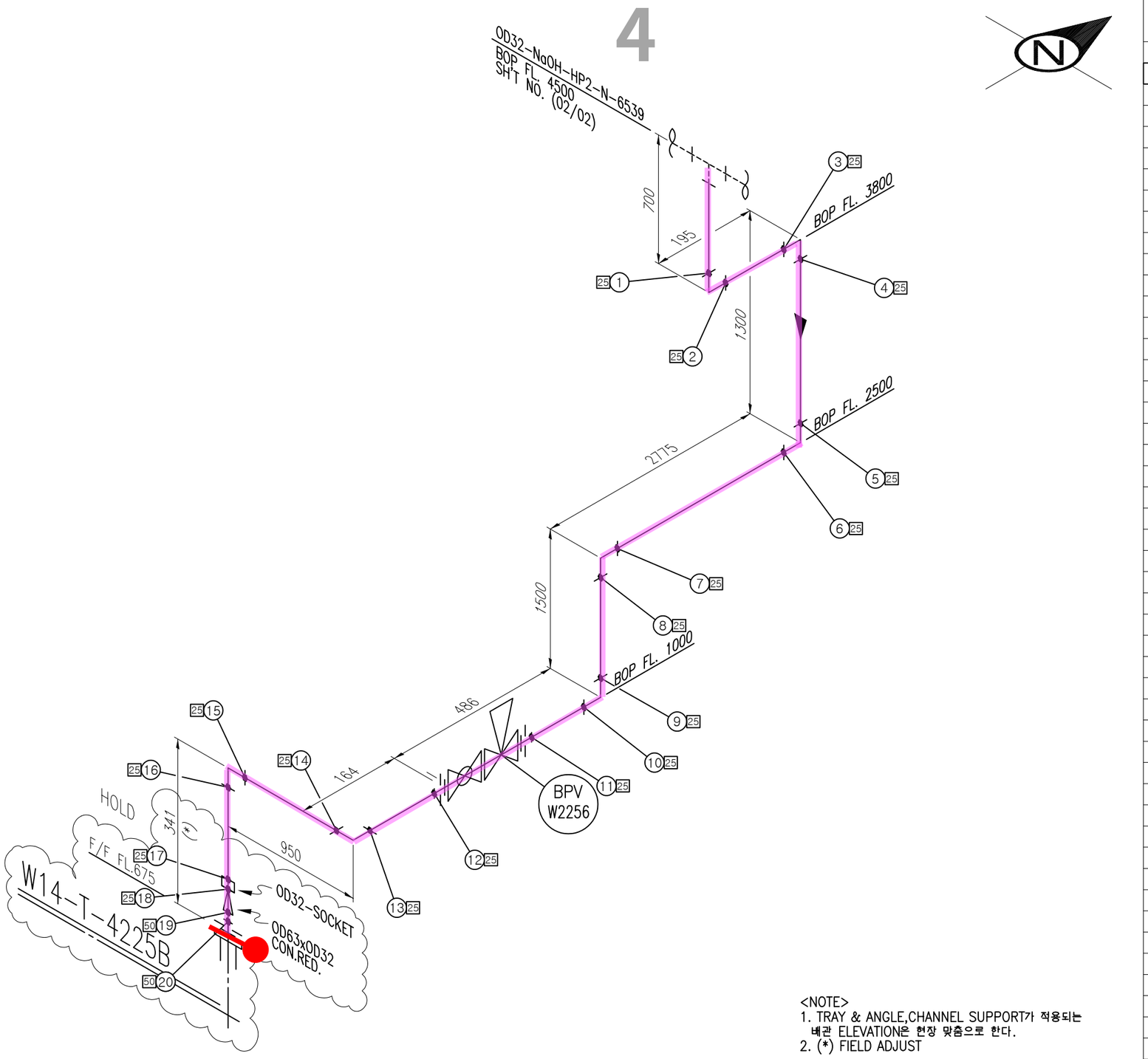

<NOTE>
1. TRAY & ANGLE,CHANNEL SUPPORT가 적용되는
배관 ELEVATION은 현장 맞춤으로 한다.
2. (*) FIELD ADJUST

SK ecoplant

ITEM	SIZE	Q'TY	DESCRIPTION
		HP2	
P	OD63	0.1M	PIPE, HDPE PE100, PE, SOCKET FUSION, PN16/SDR11
P	OD32	8.4M	PIPE, HDPE PE100, PE, SOCKET FUSION, PN16/SDR11
E90	OD32	7EA	ELBOW 90 DEG, HDPE PE100, PE, SOCKET FUSION,
RC	OD63xOD32	1EA	REDUCER CON, HDPE PE100, PE, SOCKET FUSION,
			PN16/SDR11
SC	OD32	1EA	SOCKET, HDPE PE100, SOCKET FUSION, PN16/SDR11
VBLO	OD32	1EA	BALL VALVE, KS 10K, FF FLG'D, BODY-PP /
			TRIM-PP / SEAT-PTFE, FB, LEVER + LOTO
F	OD63	1EA	FLG LAP JOINT / STUB END SET, KS 10K, FF,
			LAP JOINT-STS304 / STUB END-HDPE PE100
F	OD32	2EA	FLG LAP JOINT / STUB END SET, KS 10K, FF,
			LAP JOINT-STS304 / STUB END-HDPE PE100
G	OD63	1EA	GASKET, KS 10K, FF, PTFE+EPDM, 3.0MM TH'K
G	OD32	3EA	GASKET, KS 10K, FF, PTFE+EPDM, 3.0MM TH'K
B1	OD63	1SET	MACHINE BOLT & NYLON NUTS :STS 304 / W WASHERS
B1	OD32	3SET	MACHINE BOLT & NYLON NUTS :STS 304 / W WASHERS
SH	OD63	1EA	SHIELD
SH	OD32	3EA	SHIELD
BPV	OD32	1EA	BACK PRESSURE VALVE

* PIPE : P/P1 * 90° ELBOW : E90 * 45° ELBOW : E45 * TEE : T * RED.TEE : TR * STUB-IN : STU * REINFORCING PAD : RP * CON.RED : RC * ECC.RED : RE * CON.SWAGE : RCS/RCS1 * ECC.SWAGE : RES/RES1 * NIPPLE : NP/NP1/NP2 * CAP : CAP/CAP1 * PLUG : PLG * FULL COUPLING : FC * HALF COUPLING : HF/HF1
* STUB-IN : STU * SOCKET(HDPE/PVC) : SC * SADDLE(HDPE) : SD * FLANGE : F/F1 * GASKET : G/G1/G2 * BOLT & NUT : B/B1 * BLIND FLANGE : FB/FB1 * GATE VA. : VG/VG1/VG2 * BALL VA. : VB/VBLO/VB1/VB1LO/VB2/VB2LO * BUTTERFLY VA. : VF/VF4 * CHECK VA. : VC/VC1/VC2/VC3/VC4/VC5/VC6/VC7
* GLOBE VA. : VL/VL1/VL2 * DIAPHRAGM VA. : VD/VDLO * DAMPER : VP * QUICK COUPLING : SQC * FLEXIBLE JOINT(STEEL) : FLXB * FLEXIBLE JOINT(RUBBER) : FLXR * FLEXIBLE JOINT(STEEL_PTFE LINED) : FLXL * FLEXIBLE HOSE : FLXH * STEAM TRAP : ST * SPRAY NOZZLE : SPN * EMERGENCY SHOWER : SSH
* STRAINER(Y-TYPE) : YSTR * STRAINER(T-TYPE) : TSTR * STRAINER(BUCKET-TYPE) : BSTR * ANCHOR PLATE : STOP * BIRD SCREEN : BS * ISOLATION KIT : IK * UNLOADING BOX : UB * AIR TRAP : AT * LOTO : LOTO * SIGHT GLASS : SG * PRESSURE GAUGE : PG * SHILED : SH * SPECIAL BOLT & NUT : BL/BL1

CLIENT SK hynix 7

INSULATION	CODE	N	CONDITION	PRESS. (kg/cm2g)	TEMP. (°C)
	THICK.	–	DESIGN	6.8	60
			OPERATING	6.1	AMB

AREA W14
UNIT 4FA
REF. PLAN DWG. CJ-M15W14-PI-A30-040005-C
REF. P & ID CJ-M15W14-PR-A20-000114

REV. NO.	DATE	DESCRIPTION	BY	CHK	APP'D
0	25.01.24	APPROVED FOR CONSTRUCTION	황래종	안남후	박동영

CONTRACTOR SK ecoplant
PROJECT NAME M15X Ph4 Project
COMMODITY NaOH
JOB NO. 22330D
LINE NO. OD32-NaOH-HP2-N-6561
SH'T NO. 01 / 01
REV. 0

경고 : 본 도면은 SK HYNIX의 기업비밀 자료로서, 어떠한 경우에도 목적 외 사용, 복제, 제3자에게 공개, 누설 및 유출할 수 없으며, 회사는 유포자의 불법 사용으로 피해가 발생할 경우 유포자에게 민/형사상 책임을 요구할 수 있음.

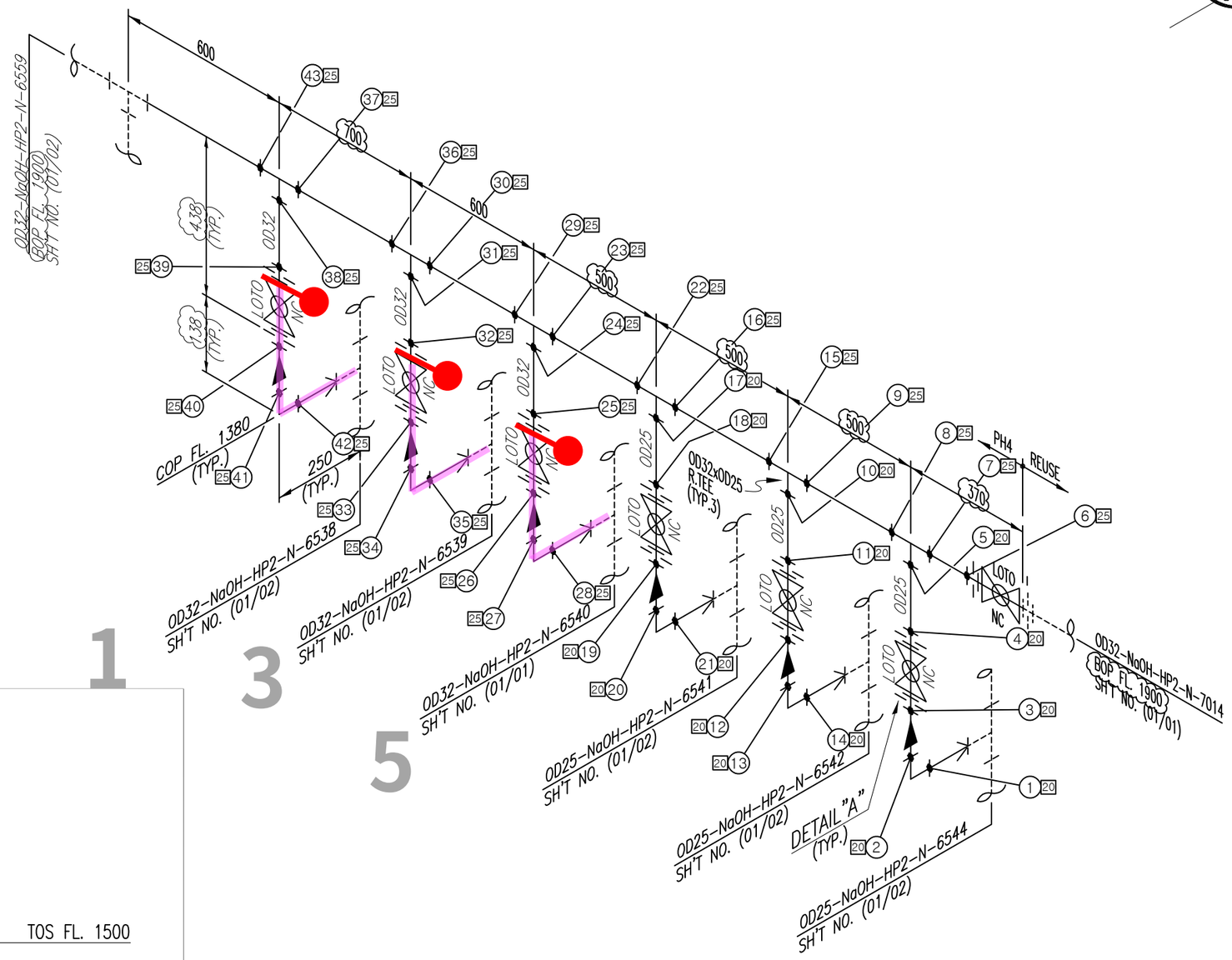

DETAIL "A"

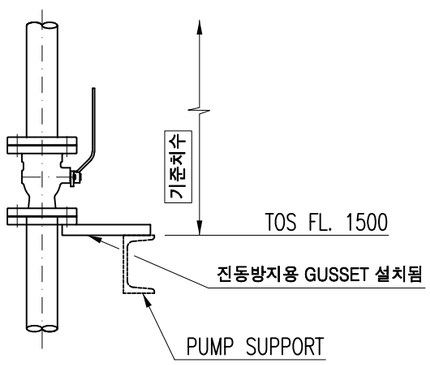

도면상의 치수는 상기 GUSSET 하부면 기준치수이니 참조할것.

<NOTE>
1. TRAY & ANGLE,CHANNEL SUPPORT가 적용되는 배관 ELEVATION은 현장 맞춤으로 한다.
2. (*) FIELD ADJUST

SK ecoplant

ITEM	SIZE	Q'TY	DESCRIPTION
		HP2	
P	OD32	6.3M	PIPE, HDPE PE100, PE, SOCKET FUSION, PN16/SDR11
P	OD25	2.5M	PIPE, HDPE PE100, PE, SOCKET FUSION, PN16/SDR11
E90	OD32	3EA	ELBOW 90 DEG, HDPE PE100, PE, SOCKET FUSION,
			PN16/SDR11
E90	OD25	3EA	ELBOW 90 DEG, HDPE PE100, PE, SOCKET FUSION,
			PN16/SDR11
T	OD32	3EA	TEE EQUAL, HDPE PE100, PE, SOCKET FUSION, PN16/SDR11
TR	OD32xOD25	3EA	TEE RED, HDPE PE100, PE, SOCKET FUSION, PN16/SDR11
F	OD32	7EA	FLG LAP JOINT / STUB END SET, KS 10K, FF,
			LAP JOINT-STS304 / STUB END-HDPE PE100
F	OD25	6EA	FLG LAP JOINT / STUB END SET, KS 10K, FF,
			LAP JOINT-STS304 / STUB END-HDPE PE100
G	OD32	7EA	GASKET, KS 10K, FF, PTFE+EPDM, 3.0MM TH'K
G	OD25	6EA	GASKET, KS 10K, FF, PTFE+EPDM, 3.0MM TH'K
B1	OD32	7SET	MACHINE BOLT & NYLON NUTS :STS 304 / W WASHERS
B1	OD25	6SET	MACHINE BOLT & NYLON NUTS :STS 304 / W WASHERS
VBLO	OD32	4EA	BALL VALVE, KS 10K, FF FLG'D, BODY-PP /
			TRIM-PP / SEAT-PTFE, FB, LEVER + LOTO
VBLO	OD25	3EA	BALL VALVE, KS 10K, FF FLG'D, BODY-PP /
			TRIM-PP / SEAT-PTFE, FB, LEVER + LOTO
SH	OD32	7EA	SHIELD
SH	OD25	6EA	SHIELD

* PIPE : P/P1 * 90° ELBOW : E90 * 45° ELBOW : E45 * TEE : T * RED.TEE : TR * STUB-IN : STU * REINFORCING PAD : RP * CON.RED : RC * ECC.RED : RE * CON.SWAGE : RCS/RCS1 * ECC.SWAGE : RES/RES1 * NIPPLE : NP/NP1/NP2 * CAP : CAP/CAP1 * PLUG : PLG * FULL COUPLING : FC * HALF COUPLING : HF/HF1
* STUB-IN : STU * SOCKET(HDPE/PVC) : SC * SADDLE(HDPE) : SD * FLANGE : F/F1 * GASKET : G/G1/G2 * BOLT & NUT : B/B1 * BLIND FLANGE : FB/FB1 * GATE VA. : VG/VG1/VG2 * BALL VA. : VB/VBLO/VB1/VB1LO/VB2/VB2LO * BUTTERFLY VA. : VF/VF4 * CHECK VA. : VC/VC1/VC2/VC3/VC4/VC5/VC6/VC7
* GLOBE VA. : VL/VL1/VL2 * DIAPHRAGM VA. : VD/VDLO * DAMPER : VP * QUICK COUPLING : SQC * FLEXIBLE JOINT(STEEL) : FLXB * FLEXIBLE JOINT(RUBBER) : FLXR * FLEXIBLE JOINT(STEEL_PTFE LINED) : FLXL * FLEXIBLE HOSE : FLXH * STEAM TRAP : ST * SPRAY NOZZLE : SPN * EMERGENCY SHOWER : SSH
* STRAINER(Y-TYPE) : YSTR * STRAINER(T-TYPE) : TSTR * STRAINER(BUCKET-TYPE) : BSTR * ANCHOR PLATE : STOP * BIRD SCREEN : BS * ISOLATION KIT : IK * UNLOADING BOX : UB * AIR TRAP : AT * LOTO : LOTO * SIGHT GLASS : SG * PRESSURE GAUGE : PG * SHILED : SH * SPECIAL BOLT & NUT : BL/BL1

CLIENT SK hynix

8

INSULATION	CODE	N	CONDITION	PRESS. (kg/cm2g)	TEMP. (°C)
	THICK.	–	DESIGN	6.6	60
			OPERATING	6.0	AMB

AREA W14
UNIT 4FA
REF. PLAN DWG. CJ-M15W14-PI-A30-040012-A
REF. P & ID CJ-M15W14-PR-A20-000155

REV. NO.	DATE	DESCRIPTION	BY	CHK	APP'D
0	25.01.24	APPROVED FOR CONSTRUCTION	황래종	안남후	박동영

CONTRACTOR SK ecoplant
PROJECT NAME M15X Ph4 Project
COMMODITY NaOH
JOB NO. 22330D
LINE NO. OD32-NaOH-HP2-N-6559
SH'T NO. 02 / 02
REV. 0

경고 : 본 도면은 SK HYNIX의 기업비밀 자료로서, 어떠한 경우에도 목적 외 사용, 복제, 제3자에게 공개, 누설 및 유출할 수 없으며, 회사는 유포자의 불법 사용으로 피해가 발생할 경우 유포자에게 민/형사상 책임을 요구할 수 있음.