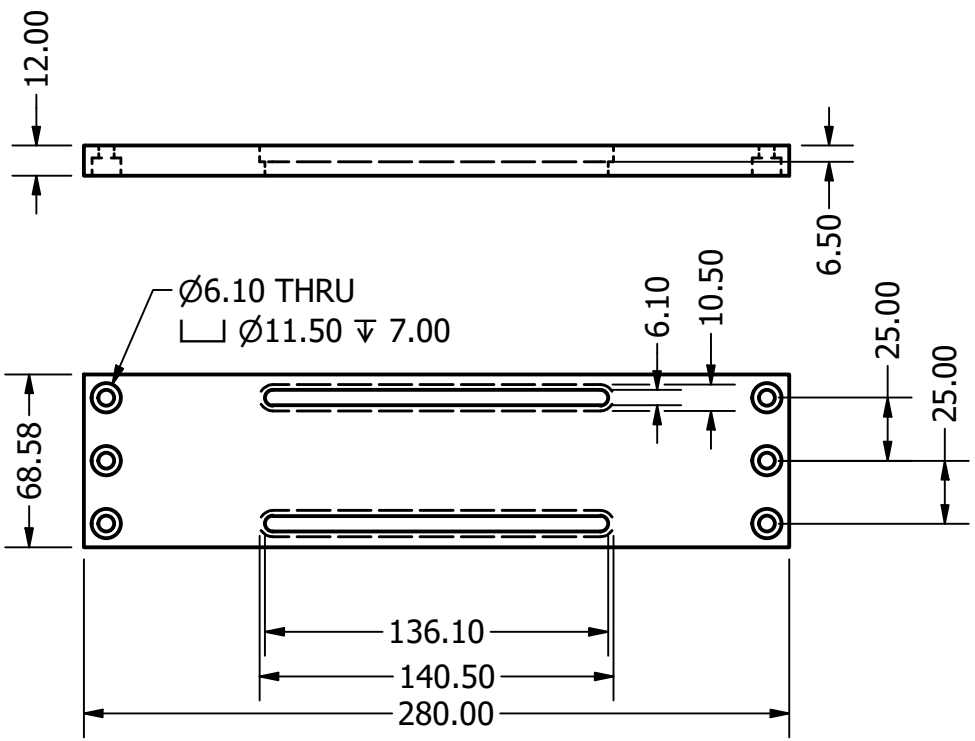

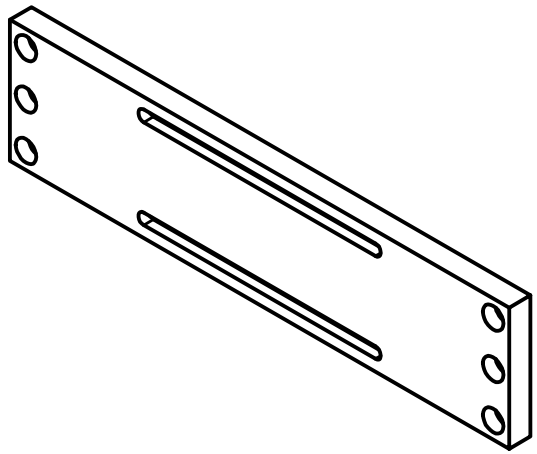

DRAWN N.Vladimirov	4/21/2023				
CHECKED		TITLE			
QA					
MFG					
APPROVED		SIZE		DWG NO	REV
Units: mm		A4		mesoSPIM_Bridge-wide	
		SCALE 1 / 3		SHEET 1 OF 1	