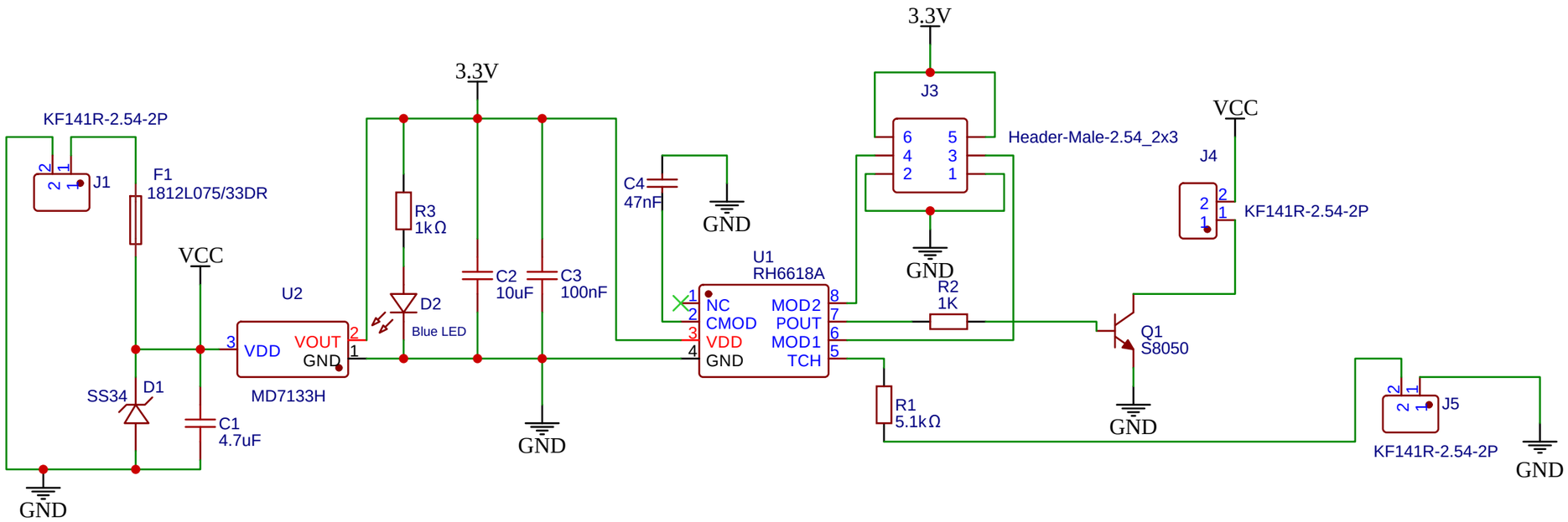

Mode selection		Motion		Remember previous on brightness
M1	M2	Click	Holding	
1	1	ON/OFF	Dimming	No
1	0	Smooth ON/OFF	Dimming	No
0	1	Smooth ON/OFF	Dimming	Yes
0	0	3 Step Dimming		No

Remarks: "1"means connect to 3.3V with jumper cap.
"0" means connect to GND with jumper cap.
Without jumper cap, it regards it as 1 by default.

R1 is 5.1K or bigger value than 5.1k to reduce false trigger

To change the led driver current, you can modify R2 and Q1.

C4 value is 2.2nF to 47nF. It is more sensitivity with bigger value. If the touch pad wire is long, you can use shield cablel.

TITLE: Touch Sensor Light Controller		REV: 1.0
嘉立创EDA	Company: Blinkinlabs	Sheet: 1/1
	Date: 2022-09-21 Drawn By: Honghong Lu	