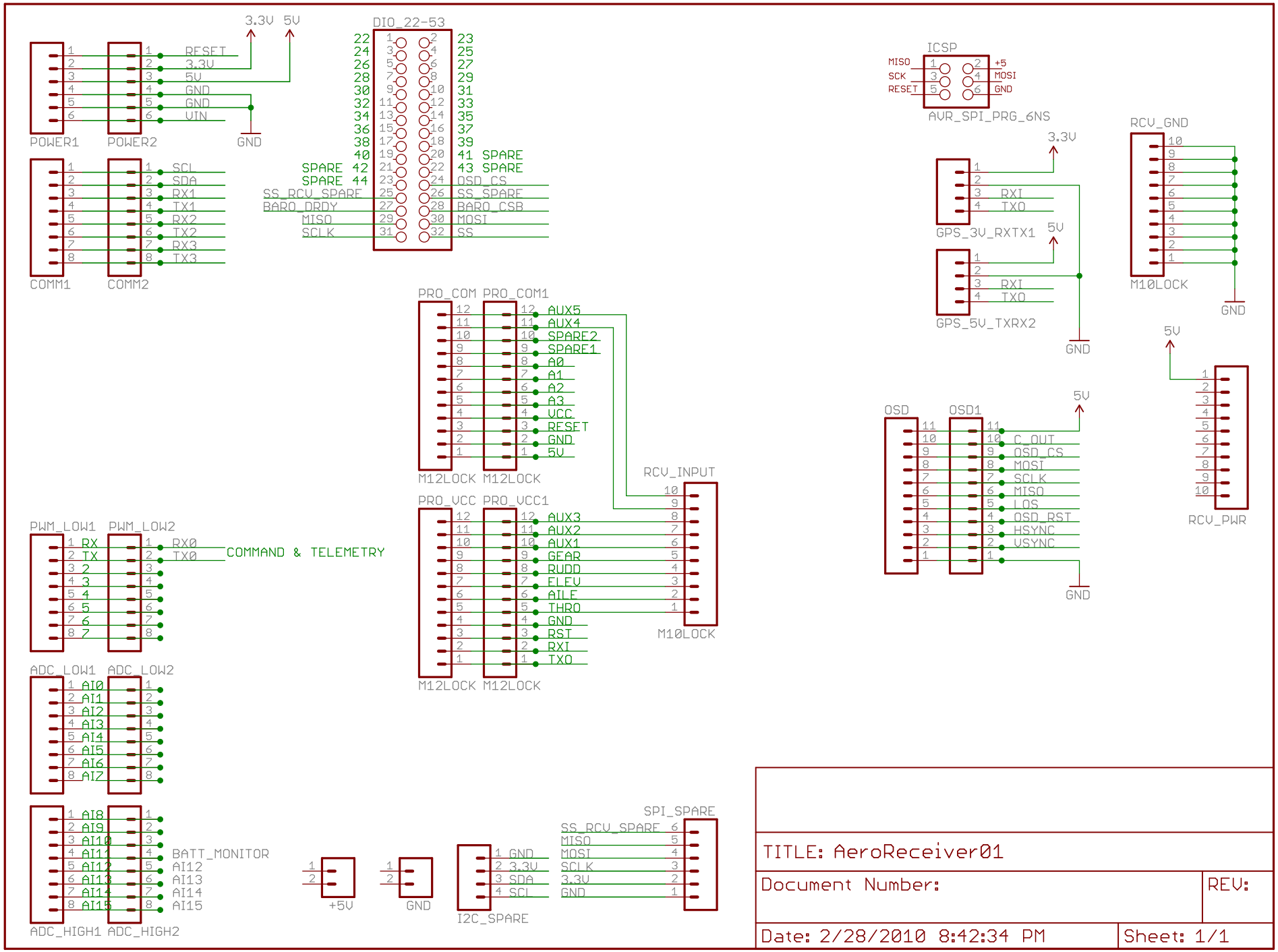
POWER1
POWER2
RESET
3.3V
5V
GND
VIN
COMM1
COMM2
SCL
SDA
RX1
TX1
RX2
TX2
RX3
TX3
DIO_22-53
SPARE
SS_RCV_SPARE
BARO_DRDY
MISO
SCLK
OSD_CS
SS_SPARE
BARO_CSB
MOSI
SS
ICSP
MISO
SCK
RESET
+5
MOSI
AVR_SPI_PRG_6NS
GPS_3V_RXTX1
GPS_5V_TXRX2
RXI
TXO
RCV_GND
M10LOCK
PRO_COM
PRO_COM1
M12LOCK
AUX5
AUX4
SPARE2
SPARE1
A0
A1
A2
A3
VCC
RESET
GND
5V
PRO_VCC
PRO_VCC1
AUX3
AUX2
AUX1
GEAR
RUDD
ELEV
AILE
THRO
RST
RCV_INPUT
RCV_PWR
OSD
OSD1
C_OUT
HSYNC
VSYNC
LOS
PWM_LOW1
PWM_LOW2
RX
TX
RX0
TX0
COMMAND & TELEMETRY
ADC_LOW1
ADC_LOW2
AI0
AI1
AI2
AI3
AI4
AI5
AI6
AI7
ADC_HIGH1
ADC_HIGH2
AI8
AI9
AI10
AI11
AI12
AI13
AI14
AI15
BATT_MONITOR
+5V
I2C_SPARE
SDA
SCL
SPI_SPARE
TITLE: AeroReceiver01
Document Number:
REV:
Date: 2/28/2010 8:42:34 PM
Sheet: 1/1