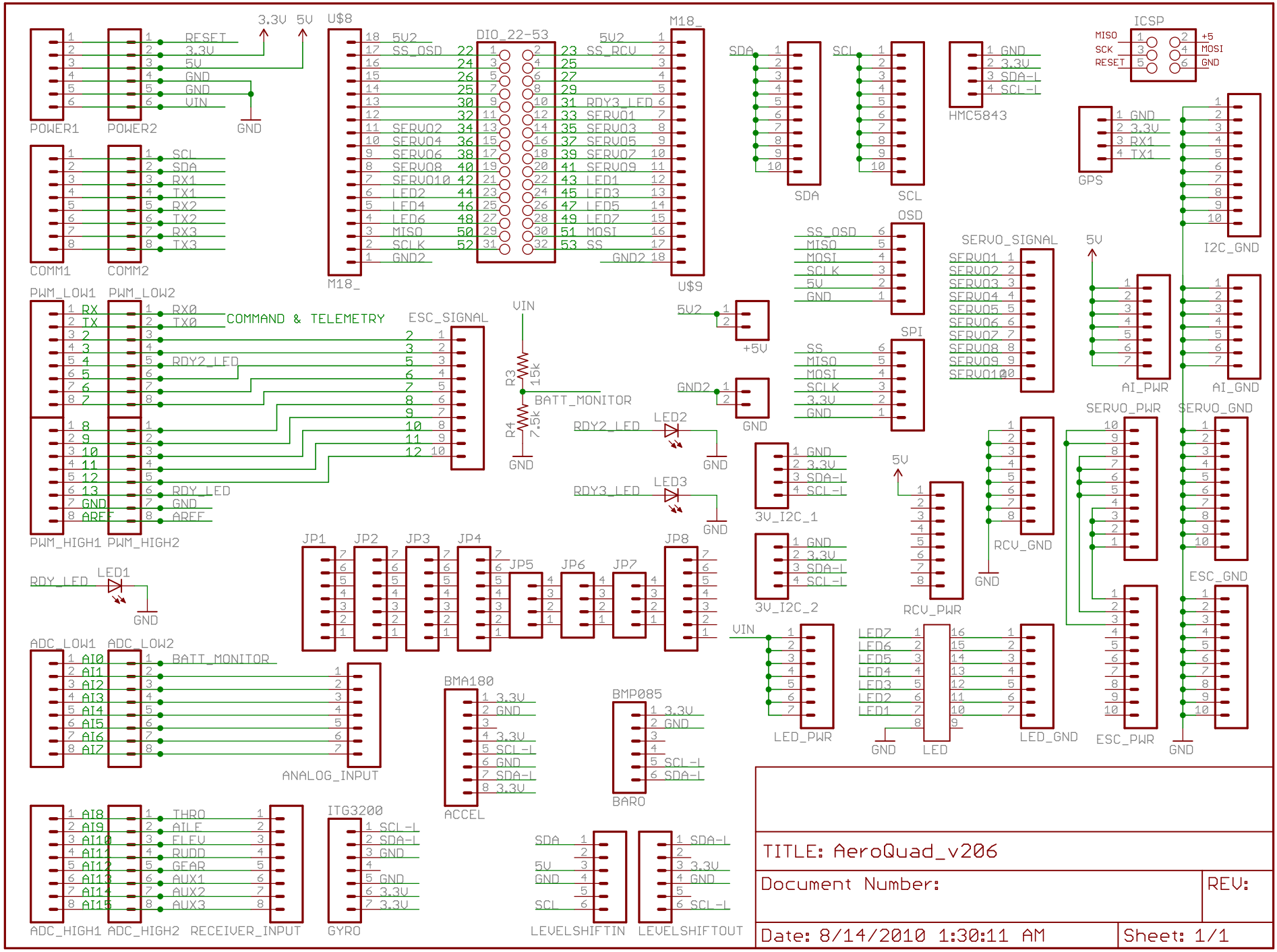
POWER1
POWER2
RESET
3.3V
5V
GND
VIN
COMM1
COMM2
SCL
SDA
RX1
TX1
RX2
TX2
RX3
TX3
U$8
M18_
DIO_22-53
5V2
SS_OSD
SERVO02
SERVO04
SERVO06
SERVO08
SERVO010
LED2
LED4
LED6
MISO
SCLK
GND2
SS_RCV
RDY3_LED
SERVO01
SERVO03
SERVO05
SERVO07
SERVO09
LED1
LED3
LED5
LED7
MOSI
SS
U$9
SDA
SCL
HMC5843
GND
3.3V
SDA-L
SCL-L
ICSP
MISO
SCK
RESET
+5
MOSI
GND
GPS
RX1
TX1
I2C_GND
OSD
SERVO_SIGNAL
AI_PWR
AI_GND
PWM_LOW1
PWM_LOW2
RX0
TX0
COMMAND & TELEMETRY
ESC_SIGNAL
RDY2_LED
RDY_LED
AREF
PWM_HIGH1
PWM_HIGH2
R3
15k
R4
7.5k
BATT_MONITOR
LED2
LED3
+5V
SPI
3V_I2C_1
3V_I2C_2
RCV_GND
RCV_PWR
SERVO_PWR
SERVO_GND
ESC_GND
ESC_PWR
LED_PWR
LED_GND
LED
JP1
JP2
JP3
JP4
JP5
JP6
JP7
JP8
LED1
ADC_LOW1
ADC_LOW2
AI0
AI1
AI2
AI3
AI4
AI5
AI6
AI7
ANALOG_INPUT
BMA180
ACCEL
BMP085
BARO
AI8
AI9
AI10
AI11
AI12
AI13
AI14
AI15
THRO
AILE
ELEV
RUDD
GEAR
AUX1
AUX2
AUX3
ADC_HIGH1
ADC_HIGH2
RECEIVER_INPUT
ITG3200
GYRO
LEVELSHIFTIN
LEVELSHIFTOUT
TITLE: AeroQuad_v206
Document Number:
REV:
Date: 8/14/2010 1:30:11 AM
Sheet: 1/1