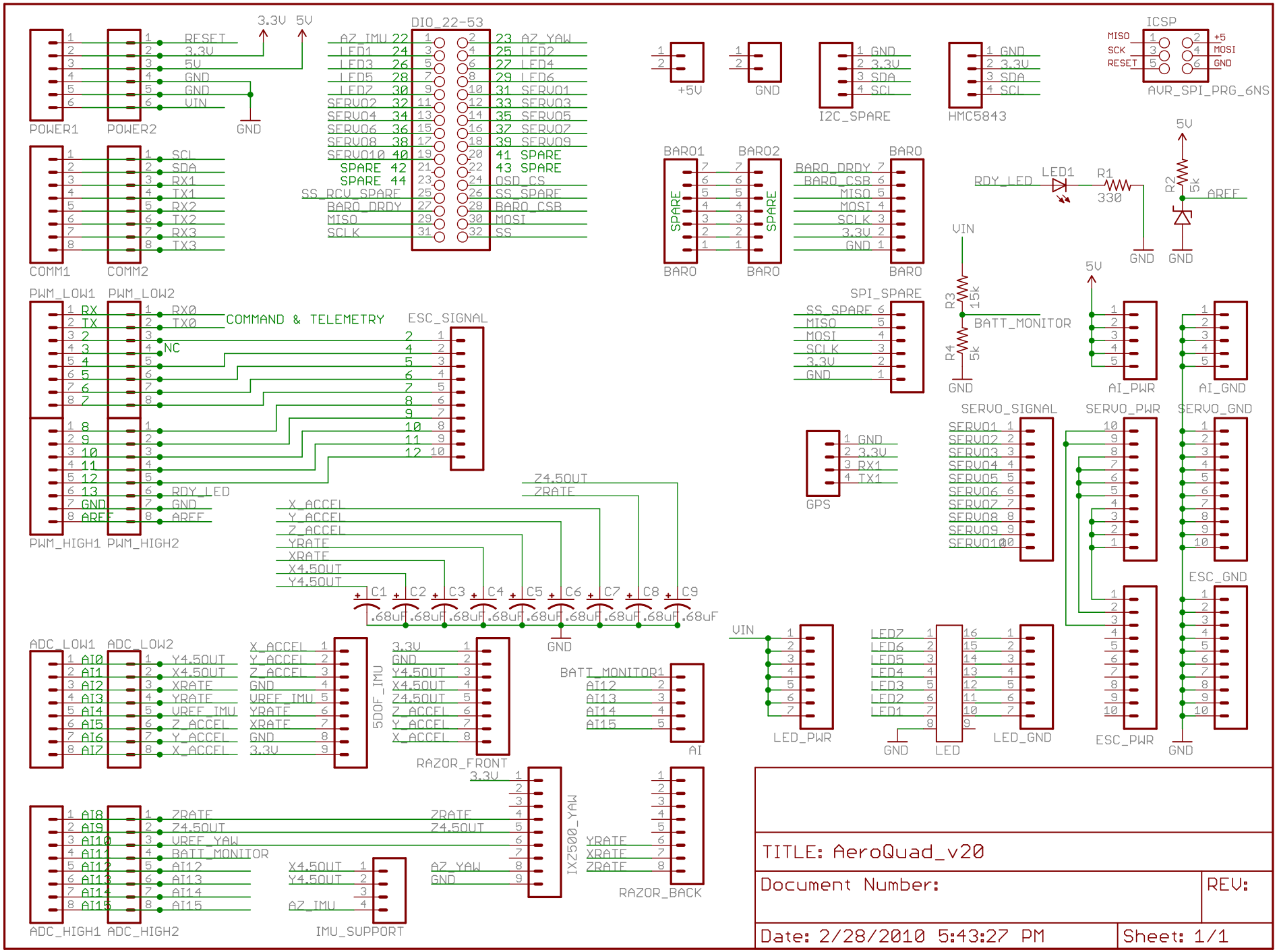
POWER1
POWER2
RESET
3.3V
5V
GND
VIN
DIO_22-53
AZ_IMU 22
LED1 24
LED3 26
LED5 28
LED7 30
SERVO2 32
SERVO4 34
SERVO6 36
SERVO8 38
SERVO10 40
SPARE 42
SPARE 44
SS_RCV_SPARE
BARO_DRDY
MISO
SCLK
23 AZ_YAW
25 LED2
27 LED4
29 LED6
31 SERVO1
33 SERVO3
35 SERVO5
37 SERVO7
39 SERVO9
41 SPARE
43 SPARE
OSD_CS
SS_SPARE
BARO_CSB
MOSI
SS
+5V
GND
I2C_SPARE
HMC5843
ICSP
MISO
SCK
RESET
+5
MOSI
AVR_SPI_PRG_6NS
COMM1
COMM2
SCL
SDA
RX1
TX1
RX2
TX2
RX3
TX3
BARO1
BARO2
BARO
SPARE
BARO_DRDY
BARO_CSB
RDY_LED
LED1
R1
330
R2
5k
AREF
VIN
R3
15k
R4
5k
BATT_MONITOR
SPI_SPARE
SS_SPARE
PWM_LOW1
PWM_LOW2
RX0
TX0
COMMAND & TELEMETRY
NC
ESC_SIGNAL
PWM_HIGH1
PWM_HIGH2
RDY_LED
AREF
Z4.50UT
ZRATE
X_ACCEL
Y_ACCEL
Z_ACCEL
YRATE
XRATE
X4.50UT
Y4.50UT
C1 C2 C3 C4 C5 C6 C7 C8 C9
.68uF
GPS
RX1
TX1
AI_PWR
AI_GND
SERVO_SIGNAL
SERVO_PWR
SERVO_GND
ESC_GND
ESC_PWR
ADC_LOW1
ADC_LOW2
AI0
AI1
AI2
AI3
AI4
AI5
AI6
AI7
VREF_IMU
5DOF_IMU
RAZOR_FRONT
BATT_MONITOR1
AI12
AI13
AI14
AI15
AI
LED_PWR
LED7
LED6
LED5
LED4
LED3
LED2
LED1
LED
LED_GND
ADC_HIGH1
ADC_HIGH2
AI8
AI9
AI10
AI11
IMU_SUPPORT
IXZ500_YAW
RAZOR_BACK
TITLE: AeroQuad_v20
Document Number:
REV:
Date: 2/28/2010 5:43:27 PM
Sheet: 1/1