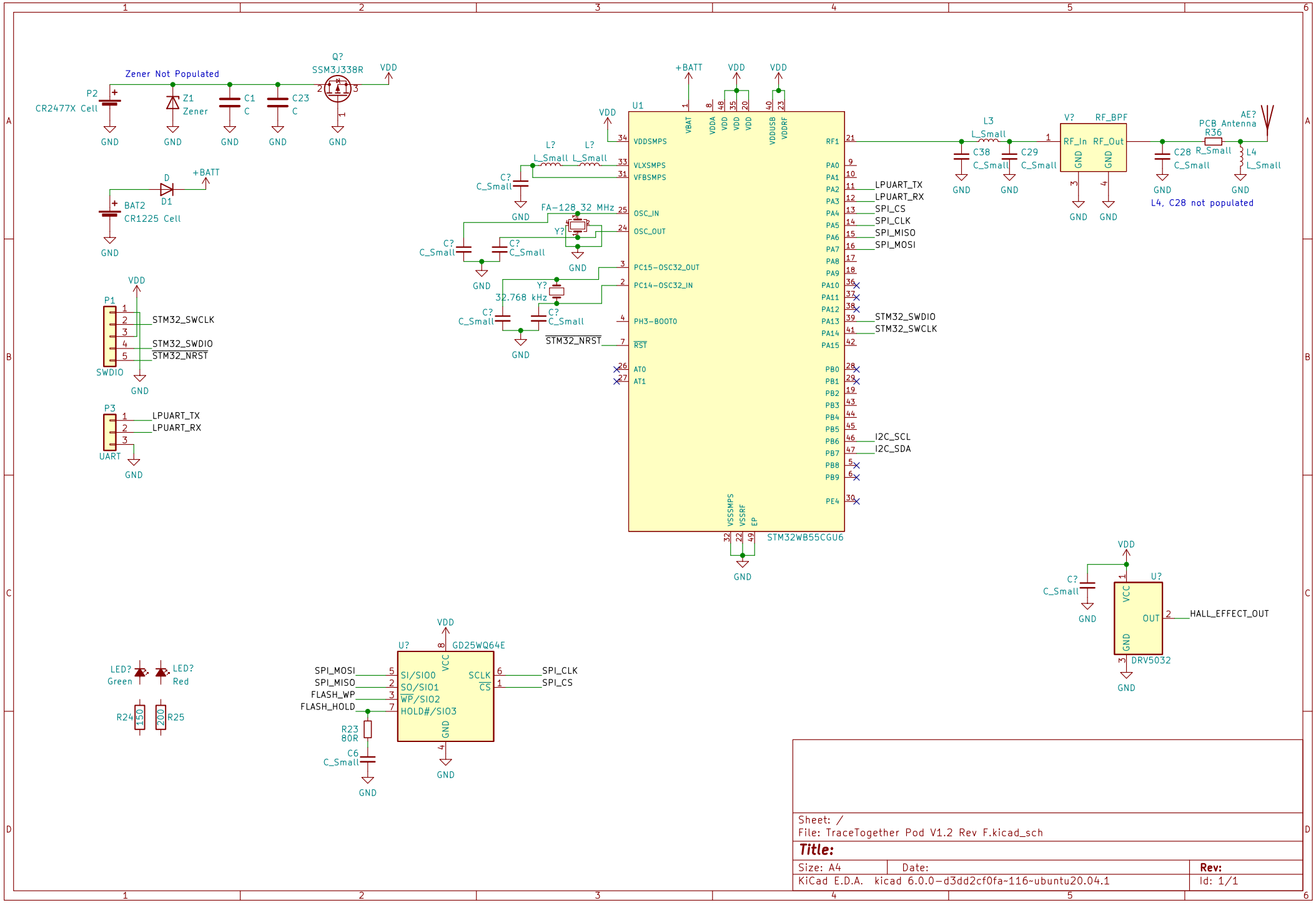

Sheet: /
File: TraceTogether Pod V1.2 Rev F.kicad_sch

Title:

Size: A4	Date:	Rev:
KiCad E.D.A. kicad 6.0.0-d3dd2cf0fa-116-ubuntu20.04.1		Id: 1/1