Humanities & Social Sciences Communications

ARTICLE

https://doi.org/10.1057/s41599-025-04945-2 OPEN

Factors influencing the acceptance and use of ChatGPT among English as a foreign language learners in Saudi Arabia

Hind M. Alotaibi[1]✉, Suhad S. Sonbul[2] & Dina A. El-Dakhs[3]

With accelerating advancements in artificial intelligence (AI) technologies, which have provided new possibilities for language learning and teaching, this study explored the factors influencing the use of a popular AI tool, ChatGPT, for English language learning among post-secondary students in Saudi Arabia. A technology acceptance model (TAM) questionnaire was administered, which yielded 184 responses (31 males, and 153 females). The results revealed that the perceived ease of use and usefulness significantly affected ChatGPT adoption. However, no significant relationship was found between perceived ease of use and attitudes, suggesting that learners' attitudes were influenced more by the tool's benefits and value for language learning. A strong positive relationship was found between Perceived Usefulness (PU) and Attitude (AT), indicating that when learners perceive ChatGPT as useful, they have favourable attitudes toward it. Educators should emphasize these benefits and integrate ChatGPT into English as a foreign language (EFL) classroom to enhance language skills. A positive attitude toward ChatGPT leads to stronger behavioural intention to use it, which positively predicts actual use. Other factors, such as gender, education level, duration of usage, and IT skills, were also examined. The results showed that female respondents had more positive attitudes; master's students perceived it as easier to use than diploma students; and longer usage durations were linked to a higher perceived ease of use. Understanding the impact of these factors can inform the integration of AI-powered tools in EFL teaching and learning environments, with interventions and support systems that promote learners' intentions to use these tools and facilitate their actual usage.

[1] King Saud University, Riyadh, Saudi Arabia. [2] Umm Al-Qura University, Mecca, Saudi Arabia. [3] Prince Sultan University, Riyadh, Saudi Arabia.
✉email: hialotaibi@ksu.edu.sa

Introduction

With the recent technological revolution in all areas, the study of user attitudes toward cutting-edge technological advancement has flourished in recent years. This includes advancements in areas such as e-commerce, medicine, and information management (e.g., Kamal, Shafiq and Kakria 2020; Park and Park 2020). Davis's (1986, 1989) technology acceptance model (TAM) has been widely applied to gauge attitudes (acceptance/rejection) toward technology usage. The TAM has recently been applied in education owing to rapid technological progress post COVID-19, and the restrictions imposed on face-to-face teaching. One notable area of recent interest in the educational context is the use of chatbots as tools in language learning settings. This study focuses on one of the most widely used chatbots (i.e., ChatGPT) and its effect on the learning of English as a foreign language (EFL).

Despite the heated debate among language practitioners on whether ChatGPT constitutes an affordance or hindrance in EFL contexts, recent studies on the use of ChatGPT in classrooms suggest that it can be a useful learning tool that assists learners in completing their tasks (Xiao and Zhi 2023) and boosts their motivation and skills in writing classes (Song and Song 2023). Moreover, Liu and Ma (2024) employed Davis's (1986, 1989) TAM to examine Chinese learners' attitudes toward the use of ChatGPT in extracurricular EFL activities. A 22-item TAM questionnaire was designed to encompass five constructs (perceived ease of use, perceived usefulness, attitude, behavioural intention, and actual use). Structural equation modelling revealed an indirect relationship between perceived ease of use and attitude of the learners, which was mediated by perceived usefulness. Although this result is informative in that it depicts the complex nature of ChatGPT use in EFL settings, the study is limited in that it only examines one EFL context (Chinese) and focuses on the use of ChatGPT outside the classroom.

This study builds upon Liu and Ma's (2024) investigation of Chinese EFL learners' use of ChatGPT by extending the inquiry to a different sociocultural and educational context i.e. Saudi Arabia. Saudi Arabia's unique sociocultural landscape—characterized by varying levels of digital literacy, differing educational policies regarding AI integration, and evolving attitudes toward emerging technologies—necessitates a distinct exploration of ChatGPT acceptance. Moreover, we examined the effect of four participant-related factors (gender, educational level, duration of ChatGPT use, and IT skills) on the TAM constructs aiming at offering a deeper insight into how demographic and experiential variables shape ChatGPT adoption. Given the limited research on ChatGPT use within the Saudi EFL context with the use of the TAM model, we anticipate that the findings of this study will have tangible implications for ChatGPT training and facilitate further exploration in this growing field.

Literature Review

AI-powered language learning. Research on artificial intelligence (AI) chatbots as conversational partners to improve language learning has flourished dramatically in recent years (Liu and Ma 2024). An important direction for these studies is how AI chatbots enable language learners to practice English as a foreign language (EFL) through verbal or written interactions with the chatbot (e.g., Asad et al. 2024; Fathi et al. 2024; Han 2021; Imran and Almusharraf 2023; Jeon 2024; Kim et al. 2021; Lee et al. 2024; Yang et al. 2022). For instance, Han (2020) examined the effect of voice-based AI chatbots on the speaking competence of 44 Korean EFL learners. A pre-and post-test experimental design was employed, including a 10-week treatment for the experimental group, during which the participants engaged in chat sessions with a voice-based AI chatbot. The results revealed that the interaction with the AI chatbot led to a significant improvement in EFL learners' speaking ability. The results also showed that the learners' attitude toward the use of AI chatbots in EFL classrooms was significantly positive. Likewise, Ebadi, Amini (2024) examined the interaction of 256 Iranian EFL learners with an AI chatbot. Data were collected through audio-recorded practices; transcriptions; three scales of social presence, learner motivation, and human-likeness; and semi-structured interviews. The results strongly indicate that learners' confidence and motivation to learn English were positively influenced by chatbot accuracy and human likeness. Another relevant study from Saudi Arabia is that of Qasem et al.,(2023) who explored the usefulness of an AI chatbot in learning specialized vocabulary. The results of the quantitative and qualitative analyses showed that the use of chatbots is crucial in enhancing learners' specialized vocabulary. The chatbots created effective interactive environments to advance EFL learners' lexical development.

In addition to studies conducted on the use of chatbots in EFL classrooms, few studies have attempted to explore the use of AI chatbots in constructing effective self-directed learning spaces. For instance, Esiyok et al., (2024) examined the educational use of AI chatbots for self-directed learning with technology (SDLT) along with information and communication technology (ICT) self-efficiency. Data were collected from 414 Turkish EFL learners via a survey following the extended TAM (explained below). The results showed that the SDLT positively influenced the intention and actual use of AI chatbots. Additionally, perceived ease of use and usefulness positively affected learners' intentions to use AI chatbots. Belda-Medina, Calvo-Ferrer (2022) also conducted another study. In their mixed-methods study, Belda-Medina, Calvo-Ferrer (2022) examined the effects of applying AI chatbots to EFL learners' autonomous language learning activities beyond the classroom. Data were collected from 115 Spanish and 61 Polish EFL students. The results revealed that learners' perceived usefulness, acceptance, and actual use of AI conversational robots for informal language learning were positively influenced by specific linguistic and technological features of the chatbots.

Recently, ChatGPT, one of the most advanced chatbots built on OpenAI's large language models (LLMs), was introduced and has thus appeared to revolutionize foreign language education in terms of how language is learned, taught, and assessed (Liu and Ma 2024). These systems represent a significant evolution in the capabilities of AI tools for language learning. Unlike earlier conventional AI technologies, which often relied on rule-based systems, pre-programmed dialogues, or corpus-based language learning tools (e.g., grammar checkers, translation software, and chatbot scripts), generative AI based on LLMs leverages vast amounts of data to generate contextually relevant and nuanced language interactions, adapt to learners' proficiency levels and individualized needs and simulates real world dialogues and cultural contexts. This exceptional capability not only promotes the students' experience but also provides opportunities for personalized learning pathways that were previously unattainable. Hence, scholars (e.g., Bekou et al. 2024; Imran et al. 2024; Kim and Park 2023; Mohamed 2024) have begun to explore the use of this advanced chatbot, which has demonstrated its ability to learn and even transcend human intelligence (Zhou et al. 2023). For instance, Xiao and Zhi (2023) conducted a small-scale qualitative study to investigate Chinese EFL learners' experiences with ChatGPT and their perceptions toward its use in language learning. The results showed that ChatGPT can serve as an effective learning partner for participants and assist them in completing EFL learning tasks. Interestingly, the participants exhibited an awareness of how the quality of ChatGPT output

needs to be scrutinized and demonstrated the ability to modify prompts to improve language learning. Similarly, Song and Song (2023) conducted a mixed-methods study to evaluate the impact of ChatGPT use on improving learners' writing skills and motivation. Writing samples of the AI-instructed and traditionally instructed groups were evaluated using scoring rubrics, and semi-structured interviews were conducted. The results revealed significant improvements in both writing skills and motivation among learners who received ChatGPT-assisted instruction compared with the control group. The qualitative results generally reflected positive feedback from ChatGPT users, who recognized its innovative instructional role.

Interest in exploring the use of ChatGPT in foreign language education also appeared in the Saudi context which, in light of Vision 2030, highly emphasizes the importance of digital transformation in all fields and the use of the most updated AI tools to enhance efficiency, productivity and innovation in all disciplines (e.g., Abed 2024; Abedalrhman and Alzaydi 2024; Althubaiti and AlYousef 2024). The Saudi Vision 2030 is a reform plan that was launched in Saudi Arabia in April 2016. The main Aim is to diversify the Saudi economy and reduce dependency on oil. It has several initiatives focusing on three main pillars: vibrant society, a thriving economy, and an ambitious nation. The key objectives involve enhancing the quality of life for citizens, promoting cultural and recreational opportunities, and fostering a robust private sector. Vision 2030 also emphasizes the importance of digital transformation, innovation, and sustainable development, aiming to position Saudi Arabia as a global leader in various sectors, including the education sector.

In the Saudi context, most studies on the use of ChatGPT in language education (e.g., Ali 2023; Alharthi 2024; Alqahtani 2024; Alsalem 2024; Jamshed et al. 2024; Ozfidan et al. 2024) examined the perceptions of students and/or teachers in different high schools and universities towards the integration of this chatbot in language learning, in general, or a specific language skill, such as speaking or writing, in particular. The findings generally showed a positive attitude towards the potential integration of ChatGPT in language learning by both students and teachers. Both groups highlighted several benefits of the use of ChatGPT, including immediate feedback, personalized learning, academic support, and improved language learning experience. However, the participants also expressed their concerns regarding the ethical and responsible use of ChatGPT in language learning, particularly with reference to plagiarism, decreased creativity and critical thinking and overreliance on the tool in doing assignments. In addition to these studies, fewer studies have adopted an experimental approach in which an experimental group using ChatGPT was compared with a control group. Such studies (e.g., Aldowsari and Aljebreen 2024; Mugableh 2024) highlighted that students' performance and motivation improved with the use of ChatGPT in language learning. The authors, thus, recommended the provision of capacity building programs for educators to support the incorporation of ChatGPT in language learning particularly in light of the remarkable technological and digital infrastructure of Saudi Arabia.

The current study contributes to this recent line of research on the use of ChatGPT to improve EFL learning. It extends the research conducted by Liu and Ma (2024) from the Chinese to the Saudi context. Liu and Ma (2024) examined the extent to which ChatGPT learners perceived and leveraged by Chinese EFL learners beyond the classroom. Similar to Esiyok et al., (2024), Liu and Ma (2024) used a questionnaire that drew upon the TAM (to be explained below). The questionnaire was completed by 405 Chinese EFL learners and the data were analysed using structural equation modelling. The results revealed that participants' perceived ease of ChatGPT use influenced learners' attitudes through the full mediator of their perceived usefulness but not directly. They also showed that having a positive attitude toward the usefulness of ChatGPT was positively correlated with a higher level of behavioural intention, and, thus, led to an increase in the actual use of ChatGPT in learning outside the classroom. Liu and Ma's (2024) work, therefore, lent support to the potential of ChatGPT as a powerful learning partner to EFL learners in China. Inspired by these results, this study extends this work by exploring the extent to which ChatGPT is used among Saudi Arabia post-secondary EFL learners and their perceptions regarding its use in EFL learning in general, not only in informal extramural settings, as was the case in Liu and Ma (2024). Thus, the current study fills a gap that previous studies in the Saudi context did not address because (1) it employs the use of the TAM model to examine the acceptance of EFL students and (2) incorporates other important factors, including gender, educational level, duration of ChatGPT use, and IT skill level which will be explained in detail later in the article.

By focusing on this niche, our study aims to bridge this gap and illuminate the distinct factors influencing the adoption of LLMs in EFL learning, thereby providing insights that are crucial for educators and researchers seeking to integrate cutting-edge AI tools into language learning curricula. Therefore, this study employs an adapted version of Liu and Ma's (2024) survey built upon the TAM. Hence, an explanation of the TAM model is deemed necessary and is detailed in the next section.

Technology acceptance model. The TAM was developed by Davis (1986, 1989), who is a prominent figure in information management. The TAM has been extensively employed to explore individuals' acceptance, rejection, and usage of information technologies in various disciplines, including education, e-commerce, entrepreneurship, medicine, and information management (e.g., Bonfanti et al. 2023; Kamal et al. 2020; Park and Park 2020; Saif et al. 2024; Wang et al. 2023). Interestingly, TAM has also been widely used to investigate individuals' acceptance and use of AI-based chatbots (e.g., Al-Abdullatif 2023; Chocarro et al. 2023; de Andrés-Sánchez and Gené-Albesa 2023; Goli et al. 2023; Iancu and Iancu 2022; Zou and Huang 2023).

This influential framework, which has been tested over the last three decades, has been successfully used to predict individuals' adoption of new technologies. This model is based on the basic relationship among attitude, intention, and behaviour (Davis, 1989). In this context, attitude refers to the extent to which individuals exhibit an interest in and how they assess new technologies. Attitudes are influenced by two factors: the perceived ease of use and perceived usefulness. Perceived ease of use refers to the extent to which using a specific technology does not require effort, whereas perceived usefulness refers to the extent to which using a particular technology can enhance one's performance on the relevant tasks. Attitude influences one's intention to use a specific technology, and intention can, in turn, predict an individual's behavioural practices while using the target technology. For more detailed definitions of the model constructs, refer to Table 1.

Several scholars have attempted to extend the TAM by adding new dimensions to the model, such as subjective norms and computer self-efficacy (e.g., Bailey et al. Yang and Wang 2019). However, the essence of the model remains the attitude-intention-behaviour relationship, along with the constructs of perceived ease of use and perceived usefulness, as shown in Fig. (1).

As mentioned above, this study employed a TAM-informed survey to explore how ChatGPT, one of the most capable chatbots worldwide, is perceived and used by Saudi post-secondary EFL

Table 1 TAM Constructs (adopted from Liu and Ma 2024).

Construct	Definition
Perceived Ease of Use (PEU)	The extent to which learners perceive that little effort will be required to use ChatGPT
Perceived Usefulness (PU)	The extent to which learners perceive that ChatGPT will be very useful and facilitate their English learning in informal and digital contexts
Attitude (AT)	The extent to which learners are interested in and positively assess the use of ChatGPT in their IDLE activities
Behavioural Intention (AI)	The extent to which learners intend to use ChatGPT in their IDLE activities
Actual Use (AU)	The extent to which learners engage in the autonomous use of ChatGPT in their IDLE activities

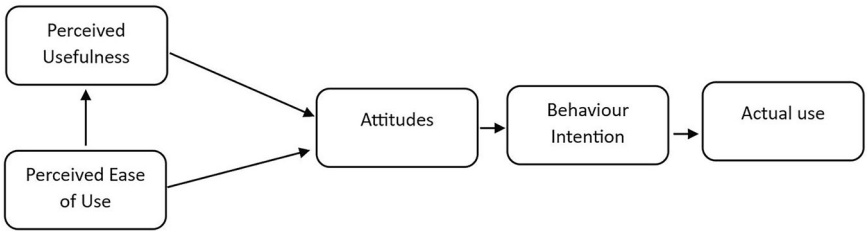

Fig. 1 Hypothesized conceptual model.

students to improve their English language skills. Thus, this study extends the research conducted by Liu and Ma (2024) to a new context (Saudi rather than Chinese) and setting (EFL in general, instead of the constrained focus on informal and extramural settings). This study can enhance our understanding of postsecondary students' potential adoption of ChatGPT to learn foreign languages and expand the horizon of ChatGPT studies to a new, relatively underexplored population. To achieve this, this study proposes several hypotheses (see Fig. 1).

1. Perceived ease of use (PEU) of ChatGPT has a significant influence on L2 students' perceived usefulness (PU).
2. PU of ChatGPT significantly influenced L2 students' attitudes (AT).
3. PEU of ChatGPT has a significant influence on L2 students' attitudes (AT).
4. The L2 students' attitudes (AT) towards ChatGPT use had a significant influence on their Behavioural intention (BI).
5. L2 students' behavioural intention towards the use of ChatGPT has a significant influence on their actual use (AU).
6. PU of ChatGPT mediates the relationship between Perceived ease of use (PEU) and attitudes (AT).

The study hypotheses are based on the suggestions and recommendations of earlier studies in the literature. Regarding Hypothesis (1), several studies (e.g., Li 2023; Liu and Ma 2024; Shaengchart 2023) have validated the relationship between TAM's PU and PEU of TAMs. In Hypotheses (2) and (3), some earlier studies have noted that participants develop a positive attitude toward the use of ChatGPT and AI technologies based on several variables, including PU (e.g., Abdaljaleel et al. 2024; Liu and Ma 2024; Sallam et al. 2024) and PEU (e.g., Menon and Shilpa 2023; Sallam et al. 2024). Hypothesis 4 was motivated by a recurrent finding in the literature that participants' AT was a significant predictor of their BI when using ChatGPT (e.g., Liu and Ma 2024; Zou and Huang 2023). Hypothesis 5 reflects the findings of earlier studies that participants' BI has a significant effect on their AU of ChatGPT and AI tools (e.g., Qu & Wu 2024; Strzelecki (2024); Zou and Huang 2023). Finally, Hypothesis 6 is based on repeated reports that participants' PU serves as a dominant mediator between their PEU and attitude (e.g., Qu and Wu 2024; Sallam et al. 2024; Zou and Huang 2023).

In addition to these main hypotheses, we examined the effect of four participant-related factors on the five TAM constructs. These factors were chosen based on a literature survey on potential variables that could influence the TAM constructs. The first factor is gender. Our interest here was to examine if men and women vary in their acceptance of the use of ChatGPT in the Saudi EFL context. The inclusion of this variable was motivated by earlier findings that pointed out that gender differences may emerge while dealing with AI technologies. For instance, Goswami and Dutta (2016) examined the choice of the gender variable, concluding that men have more expertise in technology than women in the ICT context. This was also influenced by earlier studies such as Albarrán Lozano et al., (2021), who highlighted that men were more interested than women in technological developments. More recently, Elshaer et al., (2024) examined the moderating effect of gender in the relationship between university students' acceptance and use of ChatGPT in Saudi Arabia. The results pointed to a significant moderating effect of gender on the relationship between performance expectancy and ChatGPT usage. Men demonstrated a stronger performance expectancy level in fostering ChatGPT than women. Moreover, social influence was shown to significantly affect males more than females in relation to ChatGPT usage Fig. 2.

The second factor we examined in the present study is the participants' educational level. We wanted to explore if one's educational level (e.g., BA, MA, PhD, etc.) could affect their level of acceptance of the incorporation of ChatGPT in foreign language education. The focus on the educational level was grounded in the literature which includes mixed results about the potential impact of the educational level on technology acceptance. For example, Vo and Nguyen (2024) found that the educational level of students significantly affected the effectiveness of using ChatGPT in language learning and teaching. Similarly, Ma et al., (2024) found that the participants' educational level was a notable predictor in people's intentions to use ChatGPT. However, Yilmaz et al., (2023) did not find any significant effect for the grade level on the acceptance of university students of ChatGPT in a private university in Kazakhstan. Against this backdrop, our study will contribute to our understanding of the effect of the educational level on the ChatGPT acceptance in Saudi Arabia.

In addition to gender and the educational level, we examined two other participant-related factors that are more exploratory in

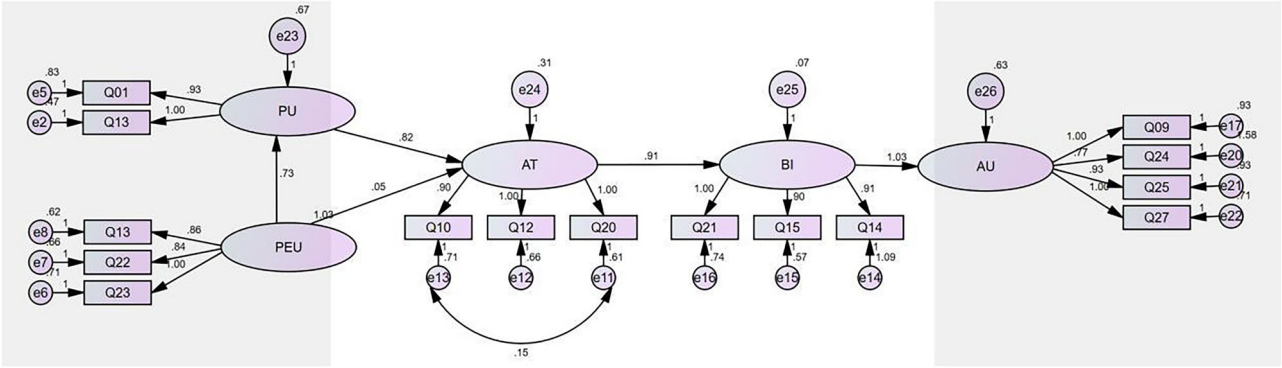

Fig. 2 The Final Structural Model.

nature. We wanted to explore if the duration one has used ChatGPT and one's digital competence (or level of IT skills) (e.g., beginner, medium, advanced) could influence their acceptance level of ChatGPT in the EFL context. The literature has preliminary findings in this regard, which leaves a clear gap that needs to be filled. Regarding the duration of ChatGPT use, we considered the findings of a few earlier studies showing that the participants' experience of use was a factor conditioning facilitation in all TAM constructs (Romero-Rodríguez et al. 2023), particularly with regard to the perceived ease of use (Zou and Huang 2023). We wanted to explore if the same findings will apply with ChatGPT. As for the IT skill level variable, we considered the earlier studies that found positive and significant relationships between participants' digital competence and their beliefs about the technological ease of use and perceived usefulness of technology (Antonietti et al. 2022; Panagiotarou et al. 2020). In these studies, teachers' digital competence belief directly influenced beliefs about technology.

Methods

Participants. Participants were recruited from multiple public and private tertiary educational institutions across various regions in Saudi Arabia to ensure a diverse and representative sample. A convenience sampling method was used, where participants were invited to participate through institutional email lists, social media platforms, and direct invitations from faculty members between January and May 2024. After obtaining their informed consent which was part of the online questionnaire, the participants completed the questionnaire, which typically took 10 minutes (detailed description of the questionnaire is presented below). Initially, 362 responses were collected, however, several of the responses had to be excluded for one of two reasons: (1) the respondent was not Saudi (N = 24) or (2) the learner indicated that they had not yet started using ChatGPT (N = 154). This exclusion aimed to maintain a culturally and contextually specific focus and to ensure that the participants could provide informed insights on their experiences. Thus, we ended up with 184 responses that fit our inclusion criteria: Saudi learners at the tertiary education level who had started using ChatGPT in English language learning both in-class and extracurricular learning.

Among the final cohort of 184 respondents, 153 were females and 31 were males. Their ages ranged from 17 to 40 years (Mean = 21.72; SD = 4.51). Most respondents (n = 133, 73%) were BA students, 31 were diploma students (17%), 10 (5%) were MA students, and 10 were PhD candidates (5%). The majors the participants pursued ranged from pure sciences, medical sciences, computer science, and IT to languages, law, and business administration. When asked about the time they had started using ChatGPT for English language learning both in-class and extracurricular learning, 61 respondents (33%) indicated less than a month, 38 respondents (21%) indicated 1–3 months, 45 (24%) indicated 4–7 months, 18 (10%) indicated 8–12 months, and 22 (12%) had been using ChatGPT for over a year. In terms of IT skills, 6 (3%), 18 (10%), 44 (24%), 70 (38%), and 46 (25%) respondents indicated very poor, poor, moderate, advanced, and very advanced levels, respectively.

Instrument. We adapted Liu and Ma's (2024) 22-item TAM questionnaire with four, five, four, three, and six items under the PEU, PU, AT, AI, and AU constructs, respectively (see Appendix A for the version employed in this study). Similar to Liu and Ma, we used a 6-point Likert scale (1= strongly disagree, 6 = strongly agree). However, we made an important change (see Appendix A for the full list of items). While Liu and Ma's items focused on the use of ChatGPT for English language learning outside the classroom, we opted for a more generic approach, encompassing all EFL learning activities both inside and outside the classroom. For example, inside the classroom, students might engage in role-playing scenarios or language games facilitated by ChatGPT, while outside the classroom, they could utilize the tool for homework assignments, language practice through conversation simulations, or even for enhancing their writing skills through feedback on essays. Thus, all items that originally included phrases like 'extracurricular' (Q11 under PU), 'beyond the classroom' (Q9, Q11, Q27 under AU) and 'out-of-class settings' (Q17, Q25 under AU) were made generic through removing these phrases.

The final version of the questionnaire was translated into Arabic to ensure maximum comprehension. The translation was verified by three authors (all proficient Arabic-English bilinguals), and all discrepancies were resolved through a collaborative review process. The researchers compared the translated version with the original English text, discussed any inconsistencies, and reached a consensus on the most accurate and contextually appropriate wording. To further ensure accuracy, adjustments were made based on semantic equivalence and clarity. We included both Arabic and English versions of the items in the online survey to account for different learner preferences. In addition to these 22 items, the survey included background questions related to sex, age, educational level, major, duration of ChatGPT use, and general IT skills.

The duration of ChatGPT use included: less than a month, 1–3 months, 4–7 months, 8–12 months, and over a year. These categories align with technology adoption models, which suggest that user perceptions evolve as they gain experience with a tool (Romero-Rodríguez et al. 2023). The shortest duration represents new users forming initial impressions, while the 1–3 month category includes those exploring ChatGPT more consistently.

The 4–7 month range reflects intermediate users who have likely developed stable perceptions, whereas the 8–12 month category represents experienced users assessing long-term practicality. Finally, those with over a year of use have well-established habits and attitudes toward ChatGPT.

The five-level IT skill categorization, from "very poor" to "very advanced," captures varying technological proficiency, which influences users' ability to adopt ChatGPT. Research suggests that IT competence affects perceived ease of use, with higher digital literacy enabling smoother integration of new technologies (Venkatesh and Bala 2008). This classification allows for a precise analysis of how IT skills shape user attitudes and adoption, addressing both technical challenges for less skilled users and the expectations of highly proficient ones. These were included to provide an accurate description of the participants (see above) and to examine the effects of certain factors on the TAM constructs.

Table 2 Reliability and Construct Validity.

Construct	Items	Sample ($n = 184$) Communality (> 0.4)	Cronbach's alpha (α) (> 0.7)
PEU	Q07	0.778	0.857
	Q13	0.651	
	Q22	0.696	
	Q23	0.682	
PU	Q01	0.665	0.889
	Q03	0.716	
	Q11	0.591	
	Q13	0.763	
	Q14	0.732	
AT	Q10	0.740	0.872
	Q12	0.732	
	Q20	0.781	
	Q26	0.640	
	Q14	0.653	
BI	Q15	0.694	0.795
	Q21	0.792	
AU	Q09	0.682	0.896
	Q11	0.701	
	Q17	0.606	
	Q24	0.501	
	Q25	0.693	
	Q27	0.785	
Cronbach's alpha (α) of the entire questionnaire (> 0.7)	0.951		
KMO (> 0.6)	0.937		
Bartlett's Test of Sphericity	Approx. Chi-Square	2953.708	
	Degree of Freedom	231	
	p-value (< 0.05)	0.000	

Data analysis. Data analysis involved the collection of 184 questionnaire responses. SPSS (version 26.0) and AMOS (version 26.0) were used to conduct structural equation modelling analyses encompassing five distinct stages. Initially, a thorough data screening process was undertaken to address various issues, such as respondents' misconduct, outliers, errors, and missing values. Concurrently, the normal distribution of the data was assessed by computing skewness and kurtosis values for the 22 items. Second, Cronbach's alpha (α) was calculated for each construct to assess the internal consistency of the questionnaire. Results from Table 2 indicated high α values for the five TAM constructs: 0.857 for PEU, 0.889 for PU, 0.872 for AT, 0.795 for BI, and 0.896 for AU, all surpassing the threshold of 0.7, thus indicating established reliability.

Subsequently, attention shifted to examining the construct, convergent, and discriminant validity of the questionnaire. This

Table 4 Descriptive Statistics.

Constructs	Items	Mean	SD	Skewness	Kurtosis
PEU	Q07	4.9076	1.21338	−0.879	−0.184
	Q13	4.9022	1.17868	−0.861	−0.038
	Q22	5.0761	1.18491	−1.304	1.237
	Q23	4.8424	1.32325	−1.008	0.219
PU	Q01	4.5543	1.37792	−0.792	0.111
	Q03	4.6467	1.31415	−0.740	−0.108
	Q11	4.8913	1.25412	−1.120	0.812
	Q13	4.6467	1.30580	−0.780	0.055
	Q14	4.7283	1.37982	−0.913	0.126
AT	Q10	4.8533	1.29951	−1.083	0.507
	Q12	4.7120	1.36653	−1.012	0.518
	Q20	4.7609	1.34992	−0.890	0.021
	Q26	4.6413	1.32303	−0.789	−0.014
BI	Q14	4.7283	1.41114	−1.040	0.334
	Q15	5.0380	1.20276	−1.217	0.989
	Q21	5.0054	1.34894	−1.428	1.368
AU	Q09	4.1576	1.64704	−0.470	−0.964
	Q11	4.3152	1.64917	−0.589	−0.848
	Q17	4.5978	1.49359	−0.788	−0.376
	Q24	4.0978	1.63004	−0.351	−1.127
	Q25	4.3587	1.57564	−0.677	−0.547
	Q27	4.3261	1.57583	−0.637	−0.630

Table 3 Convergent Validity and Discriminant Validity.

		AVE (> 0.5)	CR (> 0.7)	The square root of AVE				
				1	2	3	4	5
1	PEU	0.558	0.791	**0.747**				
2	PU	0.644	0.782	0.572**	**0.802**			
3	AT	0.662	0.855	0.561**	0.748**	**0.814**		
4	BI	0.574	0.801	0.393**	0.745**	0.712**	**0.758**	
5	AU	0.598	0.855	0.388**	0.682**	0.683**	0.615**	**0.774**

The square root of the AVE is shown along the diagonal line in bold. Values below the diagonal display the correlation coefficients (r) between the constructs.
**Correlation is significant at the 0.01 level (2-tailed).
After fitting the SEM, and to address the secondary objective of the study (effect of participant-related factors on the TAM constructs), we conducted several ANOVAs for gender (male vs. female), tertiary educational level (diploma, BA, MA, PhD), duration of ChatGPT use (less than a month, 1–3 months, 4–7 months, 8–12 months, and over a year), and IT skill (five levels from 'very poor' to 'very advanced').

Table 5 Goodness-of-fit indices of the measurement model.

	χ^2/df	CFI	NFI	IFI	RMSEA	TLI	RMR
The measurement model	1.797	0.956	0.907	0.957	0.066	0.945	0.097
Recommended values (Kline (2023))	<3	>0 0.90	>0.90	>0.90	<0.10	>0.90	≤0.10

Table 6 Hypotheses test results.

	β	p	R^2	Result
H1: PEU positively predicts PU.	0.732	$p < 0.001$	0.450	Accept
H2: PU positively predicts AT.	0.820	$p < 0.001$	0.741	Accept
H3: PEU positively predicts AT	0.052	0.643		Reject
H4: AT positively predicts BI.	0.911	$p < 0.001$	0.934	Accept
H5: BI positively predicts AU.	1.034	$p < 0.001$	0.645	Accept
H6: PU mediates the relationship between PEU and AT				Full mediation

involved computing the KMO-value (0.937) and Bartlett's test of sphericity (χ 2 = 2953.708; df = 231; $p < 0.000$), and evaluating communality values (all exceeding 0.4), supporting construct validity. Convergent validity was assessed by calculating the composite reliability (CR) and average variance extracted (AVE) scores for each factor. The results presented in Table 2 reveal that all CR scores surpassed 0.7, and the AVE values exceeded the 0.5 threshold, indicating satisfactory convergent validity. Discriminant validity was confirmed by comparing the square roots of the AVE with the interfactor correlation coefficients (Table 3), suggesting significant differences among the five factors. Furthermore, by employing the maximum likelihood method, the measurement model among the five factors was scrutinized and adjusted using the AMOS software. Finally, using the validated measurement model, path and mediation analyses were conducted to validate the relationships among the factors. Thus, our data fit all the criteria for structural equation modelling (SEM).

Results

Descriptive statistics. Table 4 presents the descriptive statistics, including the mean (M), standard deviation (SD), skewness, and kurtosis for each of the 22 items. The Skewness values ranged from −1.428 to −0.351, falling below the recommended threshold of |3.0|, indicating a distribution close to symmetrical. Similarly, kurtosis values ranged from 1.368 to −1.127, well below the recommended threshold of |8.0|, suggesting the data is normally distributed (Kline (2023)). Individual item mean scores ranged from 4.10 to 5.08, with the corresponding SD values fluctuating between 1.18 and 1.65. The consistently high mean scores (all above 4.00), coupled with low variability in responses, indicate positive perceptions and attitudes among participants regarding the utility and effectiveness of ChatGPT in informal language learning.

The measurement model. Assessment of the measurement model involved a thorough examination of multiple indices to evaluate its adequacy. These indices included the χ2/df ratio, comparative fit index (CFI), normed fit index (NFI), incremental fit index (IFI), root mean square of approximation (RMSEA), Tucker—Lewis index (TLI), and root mean squared residual (RMR). The initial evaluation, as shown in Table 4, indicated that the model did not meet the required standards as the indices fell short of acceptable levels. To address this, modification indices (MI) were used to identify items exhibiting high cross-loadings that could potentially compromise the validity of the model. Subsequently, the first item of the PEU (Q07) was removed. Similarly, the second (Q03), third (Q11), and fifth (Q14) PU were removed. In addition, the fourth item of AT (Q26) and the second and third items of AU (Q11 and Q17, respectively) were removed. Correlations between the errors of Q11 and Q13 were then introduced based on the MI suggestions from AMOS. These adjustments, as shown in Table 5, resulted in a refined model that demonstrated a satisfactory fit across all evaluation criteria.

Table 7 T-Test for gender differences.

	Gender	N	Mean	Std. Deviation	*P*-value
AU	Male	31	4.1613	1.41649	0.241
	Female	153	4.4641	1.28261	
AT	Male	31	4.4194	1.25895	0.027
	Female	153	4.9281	1.14193	
BI	Male	31	4.5806	1.36074	0.071
	Female	153	4.9935	1.10915	
PEU	Male	31	4.9677	0.83602	0.680
	Female	153	5.0523	1.07478	
PU	Male	31	4.5161	1.23480	0.262
	Female	153	4.7712	1.13263	

The structural model and mediation analysis. The outcomes presented in Table 6 detail the results of evaluating the six hypotheses, four of which were supported by the data. Specifically, PPEU demonstrated a significant positive impact on PU ($\beta = 0.732$, $p < 0.001$), although it failed to predict Actual use (AT) effectively ($\beta = 0.052$, $p = 0.643$). Conversely, PU was a notable predictor of AT ($\beta = 0.820$; $p < 0.001$). Furthermore, AT exhibited a statistically significant effect on BI ($\beta = 0.911$, $p < 0.001$), which in turn positively influenced Actual Use (AU) ($\beta = 1.034$, $p < 0.001$). Upon scrutiny of the R2 scores in Table 5, it became apparent that PEU contributed 45% of the total variance in PU, whereas the combined influence of PU and PEU accounted for 74.1% of the total variance in AT. Additionally, AT contributed 93.4% of the total variance in PU and BI contributed 64.5% of the total variance in AU.

The impact of gender. The outcomes presented in Table 7 illustrate the differences in responses according to the respondents' gender using the t-test. There was a significant difference in respondents' attitudes according to gender ($p = 0.027 < 0.05$). The attitudes of females (mean = 4.93) were greater than those of males (mean = 4.42).

The impact of educational level. The outcomes presented in Table 8 illustrate the differences in responses according to

Table 8 ANOVA test for educational level.

Educational Level		N	Mean	Std. Deviation	*P*-value	Pairwise Comparison
AU	Bachelor	133	4.3233	1.31742	0.273	N/A
	Diploma	31	4.8065	1.24952		
	Master	10	4.2000	1.47573		
	PhD	10	4.6000	1.07497		
	Total	184	4.4130	1.30700		
AT	Bachelor	133	4.8647	1.14668	0.605	N/A
	Diploma	31	4.6452	1.35520		
	Master	10	5.2000	1.13529		
	PhD	10	4.8000	1.03280		
	Total	184	4.8424	1.17448		
BI	Bachelor	133	4.9323	1.18830	0.800	N/A
	Diploma	31	4.9355	1.03071		
	Master	10	4.6000	1.34990		
	PhD	10	5.1000	1.10050		
	Total	184	4.9239	1.16162		
PEU	Bachelor	133	5.0902	0.98825	0.021	Diploma/ Master (*P*-value = 0.022)
	Diploma	31	4.6129	1.25638		
	Master	10	5.7000	0.67495		
	PhD	10	5.0000	0.81650		
	Total	184	5.0380	1.03684		
PU	Bachelor	133	4.6917	1.19456	0.751	N/A
	Diploma	31	4.7419	1.09446		
	Master	10	5.1000	0.99443		
	PhD	10	4.8000	0.91894		
	Total	184	4.7283	1.15094		

respondents' education levels using ANOVA. There was a significant difference in the perceived ease of use according to the educational level ($p = 0.021 < 0.05$). The difference is between respondents studying for a diploma and those studying for a master's degree (*P*-value = 0.022 < 0.05), where PEU for those studying for a master's degree (Mean = 5.7) is higher than that for those studying for a diploma (Mean = 4.6).

The impact of duration of use. The findings presented in Table 9 illustrate the differences in responses among the five factors according to the duration of ChatGPT using the ANOVA test. There was a significant difference in PEU according to duration ($p = 0.023 < 0.05$). The difference is between respondents who use ChatGPT for less than a month and those who use it for 4–7 months (*P*-value = 0.021 < 0.05), where PEU for those using Chat GPT for 4–7 months (mean = 5.3) is higher than that of those using ChatGPT for less than a month (mean = 4.7).

The impact of IT skill. The outcomes presented in Table 10 illustrate the differences in respondents' items according to their IT skills using an ANOVA test. A significant difference was observed in actual use, attitude, behavioural intention, PEU, and PU according to ChatGPT skills ($p < 0.05$). The difference in actual use is between respondents whose skills are poor in using ChatGPT and those whose skills are very advanced in using ChatGPT (P-value < 0.05), where the actual use for respondents with poor skills in using ChatGPT (mean = 3.83) is lower than for respondents with extremely advanced skills in using ChatGPT (mean = 4.87). In addition, the difference in attitude was between respondents whose skills were poor and those with advanced and extremely advanced skills in using ChatGPT (P-value < 0.05), where the attitude for those with poor skills in using ChatGPT (mean = 3.94) was the least. In addition, the difference in behavioural intention was between respondents with moderate skills in using ChatGPT and those with very advanced skills in using ChatGPT (*P*-value < 0.05), where behavioural intention for those with moderate skills in using ChatGPT (mean = 4.61) was less than for those with considerably advanced skills (mean = 5.41).

Moreover, the difference in perceived ease of use was between all groups with different skills (P-values < 0.05), with the perceived ease of use for those with very poor skills (mean = 4.00) being the lowest. Finally, the difference in perceived usefulness between respondents with very poor, poor, and moderate skills in using ChatGPT and those with very advanced skills in using ChatGPT (*P*-values < 0.05), where perceived usefulness for those with very poor skills in using ChatGPT (mean = 3.67) was the lowest.

Discussion

This study investigated the factors that might influence the acceptance and use of ChatGPT among EFL learners in Saudi Arabia. In this section the study hypotheses are discussed in details:

H1. Perceived ease of use (PEU) of ChatGPT has a significant influence on L2 students' perceived usefulness (PU). The first hypothesis proposed that PEU would positively predict PU and results showed a significant positive relationship between PEU and PU ($\beta = 0.732$, $p < 0.001$) indicating that Saudi EFL learners perceive ChatGPT as user-friendly which contributes to their belief that the tool is useful. A high coefficient indicates a strong relationship between the variables. These findings align with those of Li (2023), Shaengchart (2023), and Liu and Ma (2024), who validated the association between PU and PEU among higher education students' intentions to use ChatGPT. These findings encourage efforts to enhance the ease of use of ChatGPT and other AI tools for EFL learners. These enhancements include improving the user interface, providing clear user instructions, and ensuring intuitive interaction that can improve the user experience and minimize adoption barriers.

H2. PU of ChatGPT would significantly influence L2 students' attitudes (AT). The second hypothesis proposed that PU of ChatGPT would significantly influence students' attitudes. Results presented in the previous section emphasized the importance of PU in shaping EFL learners' attitude towards ChatGPT showing a strong and significant positive relationship between PU and AT ($\beta = 0.820$, $p < 0.001$). These findings were confirmed by other studies such as Abdaljaleel et al., (2024), Liu and Ma (2024), and Sallam et al., (2024), suggesting that when learners perceive ChatGPT as useful, they tend to have a favourable attitude towards using it. Therefore, educators must work on raising students' awareness of the benefits of using ChatGPT and other AI tools in EFL contexts. EFL instructors can integrate AI tools into their EFL classrooms and provide students with examples of how ChatGPT can enhance their language skills, such as promoting vocabulary, providing grammar explanations, or offering language practice opportunities. These activities can assist EFL learners in recognizing the usefulness of AI tools and exploring various methods in which these tools can help them achieve their language learning goals.

H3. PEU of ChatGPT has a significant influence on L2 students' attitudes (AT). The third hypothesis in this research predicted a positive relationship between PEU and AT. Unlike the results highlighted by Menon and Shilpa (2023) and Sallam et al., (2024) where they found that PEU significantly influenced attitudes and behavioural intention, our findings indicated that there was no significant relationship between PEU and AT ($\beta = 0.052$, $p = 0.643$). Rejection of this hypothesis indicates that Saudi EFL

Table 9 ANOVA Test for Duration of Use.

Duration		*N*	Mean	Std. Deviation	*P*-value	Pairwise Comparison
AU	Less than one Month	61	4.4426	1.37264	0.534	N/A
	1-3 months	38	4.2368	1.23975		
	4-7 months	45	4.6667	1.20605		
	8-12 months	18	4.1667	1.38267		
	More than a year	22	4.3182	1.39340		
	Total	184	4.4130	1.30700		
AT	Less than one Month	61	4.6230	1.38039	0.212	N/A
	1-3 months	38	4.7632	1.02494		
	4-7 months	45	5.0667	0.91453		
	8-12 months	18	5.2222	0.87820		
	More than a year	22	4.8182	1.40192		
	Total	184	4.8424	1.17448		
BI	Less than one Month	61	4.6557	1.20948	0.101	N/A
	1-3 months	38	4.8947	0.92384		
	4-7 months	45	5.1778	1.17336		
	8-12 months	18	5.3333	0.84017		
	More than a year	22	4.8636	1.45718		
	Total	184	4.9239	1.16162		
PEU	Less than one Month	61	4.6885	1.19081	0.023**	Less than One Month/ 4-7 months
	1-3 months	38	5.1053	0.76369		(*P*-value = 0.021)
	4-7 months	45	5.3111	0.82082		
	8-12 months	18	5.2222	0.94281		
	More than a year	22	5.1818	1.25874		
	Total	184	5.0380	1.03684		
PU	Less than one Month	61	4.5410	1.28548	0.232	N/A
	1-3 months	38	4.6316	0.99786		
	4-7 months	45	5.0222	1.01105		
	8-12 months	18	4.9444	0.72536		
	More than a year	22	4.6364	1.46533		
	Total	184	4.7283	1.15094		

learners' perceptions of ChatGPT's ease of use do not directly influence their attitudes towards it. These results align with those of Liu and Ma (2024), suggesting that learners may form their attitudes toward ChatGPT based on their evaluation of how beneficial and valuable the system is for their language learning needs, rather than solely relying on their perceptions of its ease of use. These results can be interpreted considering familiarity and adaptability; that is, EFL learners in Saudi Arabia may be familiar with using various digital tools when learning a language and may have reached a certain level of adaptability to different digital tools.

H4. The L2 students' attitudes (AT) towards ChatGPT use would significantly influence on their behavioural intention (BI). The study also proposed that attitude would positively predict the behavioural intention to use ChatGPT. The results revealed a significant positive relationship between these variables ($\beta = 0.911$, $p < 0.001$), suggesting that when Saudi EFL learners show a positive attitude towards ChatGPT, they are more likely to express their intention to use it. The high coefficient indicated a strong association between these variables, underlining the importance of fostering positive attitudes to encourage learners to adopt ChatGPT. These results confirmed the findings of Liu and Ma (2024) and Zou and Huang (2023). This consistency across studies reinforces Ajzen's (1991) argument that an individual's personal attitude toward a certain behaviour plays a key role in shaping their intention to engage in that behaviour. Thus, developing a positive attitude toward AI tools in EFL learning contexts by emphasizing their benefits and value and considering any potential concerns or barriers can enhance learners' adoption of these tools.

H5. L2 students' behavioural intention towards the use of ChatGPT has a significant influence on their actual use (AU). The study also proposed that there is a positive relationship between behavioural intention and actual use. The results indicated a significant positive relationship between behavioural intention and actual use ($\beta = 1.034$, $p < 0.001$) suggesting that BI would positively predict AU of ChatGPT. A strong coefficient indicates a strong connection between these variables, emphasizing the role of behavioural intention in predicting learners' actual usage of ChatGPT. These results are consistent with those of Liu and Ma (2024), Qu and Wu (2024), Strzelecki (2024), and Zou and Huang (2023). Recognizing the relationship between intention and actual use can direct the integration of ChatGPT and other AI tools into EFL teaching and learning environments. Instructors and institutions can implement interventions and support systems to promote learners' intention to use AI tools and facilitate the translation of this intention into actual usage. These interventions include providing ongoing training and technical support to guarantee that learners have the resources and support required to use these tools effectively.

H6. PU of ChatGPT mediates the relationship between Perceived ease of use (PEU) and attitudes (AT). The sixth hypothesis in our study proposed that PU mediates the relationship between PEU and AT. The results indicate full mediation, suggesting that the relationship between PEU and AT is entirely explained by PU. This implies that Saudi EFL learners' perceptions of ChatGPT's ease of use indirectly influenced their attitudes through the tool's perceived usefulness. These findings highlight the dominant role of perceived usefulness as a mediating factor in shaping learner attitudes toward ChatGPT. Liu and Ma (2024), Sallam et al., (2024), Qu and Wu (2024), and Zou

Table 10 ANOVA test for IT skills.

Skills		N	Mean	Std. Deviation	*P*-value	Pairwise Comparison
AU	Very Poor	6	3.8333	1.16905	0.004	Poor/Very Advanced
	Poor	18	3.6667	1.08465		*P*-value = 0.008
	Moderate	44	4.1364	1.24995		
	Advanced	70	4.5286	1.27087		
	Very Advanced	46	4.8696	1.34344		
	Total	184	4.4130	1.30700		
AT	Very Poor	6	4.0000	1.41421	0.000	Poor/Advanced
	Poor	18	3.9444	1.21133		*P*-value = 0.008
	Moderate	44	4.6364	1.03634		Poor / very Advanced
	Advanced	70	4.9429	1.12785		*P*-value = 0.000
	Very Advanced	46	5.3478	1.05867		
	Total	184	4.8424	1.17448		
BI	Very Poor	6	4.1667	1.47196	0.005	Moderate / Very Advanced
	Poor	18	4.7222	1.12749		*P*-value = 0.009
	Moderate	44	4.6136	1.18549		
	Advanced	70	4.9143	1.15147		
	Very Advanced	46	5.4130	0.97925		
	Total	184	4.9239	1.16162		
PEU	Very Poor	6	4.0000	1.41421	0.000	Very Poor/Very Advanced
	Poor	18	4.0556	0.87260		*P*-value = 0.000
	Moderate	44	4.8409	1.07710		Poor/Moderate
	Advanced	70	5.0571	0.96137		*P*-value = 0.025
	Very Advanced	46	5.7174	0.54418		Poor/Advanced
	Total	184	5.0380	1.03684		*P*-value = 0.000
						Poor/Very Advanced
						P-value = 0.000
						Moderate / Very Advanced
						P-value = 0.000
						Advanced/Very Advanced
						P-value = 0.002
PU	Very Poor	6	3.6667	1.50555	0.000	Very Poor/Very Advanced
	Poor	18	4.1111	0.90025		*P*-value = 0.016
	Moderate	44	4.5227	1.15111		Poor/Very Advanced
	Advanced	70	4.8000	1.00145		*P*-value = 0.005
	Very Advanced	46	5.1957	1.20406		Moderate / Very Advanced
	Total	184	4.7283	1.15094		*P*-value = 0.042

and Huang (2023) highlight the mediating effect of PU on the relationship between PEU and AT, underlining the major role of perceived usefulness in shaping learners' attitudes toward AI tools.

The impact of gender, educational level, duration of ChatGPT use, and IT skill level. In addition, the study examined the differences in responses across the five TAM constructs according to respondents' gender, educational level, duration of ChatGPT use, and IT skill level. In relation to gender, the analysis showed that the only significant disparity in perception between male and female respondents was in the attitude dimension (P-value = 0.027 < 0.05). Unlike the findings of Yeh et al., (2021), Albarrán Lozano et al., (2021) and Bouzar et al., (2024) who found that male users tend to have more positive attitudes towards using ChatGPT, our results indicated that female users had a more positive attitude towards ChatGPT than their male counterparts. According to Yilmaz et al., (2023), recognizing gender discrepancies can be crucial in guiding the design and integration of AI tools in instructional environments to enhance the accessibility and usability of these tools for all users regardless of their gender. It should be noted though that the disproportionately larger number of female participants (153) than male participants (31) may have influenced the overall gender-related results in this study. Therefore, the results must be interpreted with caution.

The analysis also examined the differences in responses according to the respondents' educational level. The results revealed that users' educational level played a role in their perceived ease of use of ChatGPT. Master's degree students with higher educational attainment perceive ChatGPT as more user-friendly than diploma students. This could be attributed to the higher familiarity and comfort with technology among students at more advanced educational levels. These findings align with those of Al-kfairy (2024), Sobaih et al., (2024) and Vo and Nguyen (2024), who highlighted the impact of users' educational level on their acceptance and attitudes towards the use of ChatGPT in higher education. These studies highlighted the need to provide directed training and support for EFL students at lower educational levels, including comprehensive training materials, workshops, and technical support to promote the overall experience for learners with various abilities.

In addition, we examined the differences among respondents according to the duration of ChatGPT use. The results showed that there was a significant difference in the perceived ease of use of ChatGPT based on the duration of its usage. Specifically, the perceived ease of use for those using ChatGPT for 4–7 months was better than that for those using ChatGPT for < one month. This implies that the more users engage in ChatGPT, the easier it becomes to use. These findings align with the literature on technology acceptance that links users' prior experience of technology with their perceptions of its ease of use (e.g., Romero-Rodríguez et al. 2023; Zou and Huang 2023). These

studies emphasised the importance of addressing the learning curve associated with using new technologies, suggesting opportunities for users to engage with AI tools over an extended period to enhance their perceptions of their ease of use and eventually promote their adoption and use.

Furthermore, the results indicated significant differences in the actual use, attitude, behavioural intention, perceived ease of use, and perceived usefulness of ChatGPT in the Saudi EFL context based on respondents' IT skills. These results are consistent with the literature on technology acceptance (e.g., Antonietti et al. 2022; Panagiotarou et al. 2020), suggesting that users with high IT proficiency are more likely to accept and use new technologies. Consequently, academic institutions must focus on improving IT competencies among learners to enhance their overall engagement with AI.

Finaly, it is crucial to understand the study findings in the light of Saudi Arabia's cultural context where a significant digital transformation is underway. Such transformation is driven by the rapid technological advancements and the growing need to integrate these advancements in various sectors including education. According to Research and Markets (2024), the educational technology market in Saudi Arabia was valued at $714.7 million in 2023 and it is expected to grow at a rate of over 10% annually until 2028. In addition, as part of 2030 Vision, The Saudi Data & Artificial Intelligence Authority (SDAIA) (nd) was established in August 2019 by Royal Decree aiming at leading the digital transformation and positioning Saudi Arabia as a global leader in data and AI. SDAIA has released recently several initiatives to promote the ethical and responsible use of AI balancing innovation with cultural values. One of the initiatives involved SDAIA Academy as part of the National Strategy for Data and AI. The academy programs involve collaborations with various parties aimed at promoting technological and cognitive skills among Saudis. Such national efforts can help interpret the findings of this study as they seem to reflect broader trends in Saudi Arabia's digital transformation, where government-led initiatives emphasize the practical benefits of AI integration in education. With investments in AI training, digital literacy, and ethical AI adoption, institutions are working to foster positive attitudes toward emerging technologies, ultimately encouraging widespread adoption among learners.

The findings can also be linked to the fact that Saudi EFL learners are part of a tech-savvy generation with high enthusiasm for digital innovations. This is facilitated by the widespread access to reliable internet and mobile technologies. Based on the "Saudi Internet Report 2023" released by the Communications, Space and Technology Commission (CST) in Saudi Arabia, internet usage among Saudis has increased to 99% with mobile phone being the most used device for browsing at a rate of 98.9%, followed by computers 55%, then tablets 39%. Such high technology engagement explains the positive attitudes regarding the adoption and use of ChatGPT. Continuous training and support are highly needed to maximize the potential of such technologies in enhancing learning outcomes especially in the context of EFL teaching and learning.

The findings of this study highlight significant pedagogical implications, especially in the context of EFL teaching and learning in Saudi Arabia. With students' positive attitude towards AI tools and the government's emphasis on integrating these technologies in everyday life, educators must take the opportunity to explore how AI tools promote their teaching practices. These tools can provide personalized learning experience for students through accommodating their individual needs and offering personalized exercises feedback according to the learner's proficiency level. AI-powered tools can also promote EFL learners' autonomy as they provide students with the opportunity to practice English outside the classroom helping them continue learning autonomously without relying on their teacher. However, for the successful integration of these tools into EFL settings, it is essential to raise both educators' and students' awareness about the potential benefits and limitations of these tools, particularly in terms of trustworthiness and ethical use.

Conclusion

This study aimed to examine the factors that influence the use of AI chatbots (ChatGPT) among Saudi EFL learners. A TAM questionnaire was administered to 184 Saudi EFL learners (31 males, 153 females). The data analysis indicated that perceived ease of use and usefulness significantly influenced ChatGPT adoption. However, no significant relationship was found between PEU and attitudes, revealing that Saudi EFL learners' attitudes were more influenced by the tool's benefits and value for language learning. In addition, there was a significant positive relationship between perceived ease of use and attitude, suggesting that when learners perceived ChatGPT as useful, they had favourable attitudes toward it. The findings highlight the importance of leveraging AI tools to enhance EFL teaching and learning in Saudi Arabia, as these tools can provide personalized learning experiences and foster student autonomy. However, successful integration requires raising awareness among both educators and students about the benefits, limitations, and ethical use of these technologies.

Despite the significance of these findings in directing the successful integration of ChatGPT and other AI tools in EFL teaching and learning environments, several limitations should be addressed in future studies. First, the relatively small sample size, due to stringent criteria applied for respondent selection may limit the generalizability of the findings. Although 362 EFL learners initially responded to the questionnaire, 154 had not started using ChatGPT for language learning. This indicates the strong need for awareness-raising campaigns to promote the use of AI tools in EFL learning.

Additionally, most respondents were female, which may have influenced the observed gender differences in attitudes towards the use of ChatGPT. Future research should consider a more balanced gender representation to achieve a more comprehensive understanding of the role of gender in AI tool acceptance among EFL learners. Furthermore, qualitative methods, such as interviews or focus groups, could provide deeper insights into the factors influencing these attitudes among different genders, thus enriching the discussion around gender disparities in technology adoption

Another limitation is the cross-sectional design applied in this study, which captures a snapshot of the participants' perceptions at a single point in time. A longitudinal approach could be implemented in future research to observe how learners' acceptance and usage of ChatGPT evolved over an extended period.

Future research could also examine the impact of other variables such as language proficiency level, self-efficacy, and institutional support on the relationships between TAM constructs. Investigating these additional factors could offer a more comprehensive understanding of the intricate interplay among the variables influencing EFL learners' adoption of AI tools in their language learning.

Finally, this study investigated the use of ChatGPT only; further studies could include other AI-powered tools such as virtual assistants, intelligent tutoring systems, and machine translation applications to provide a deeper understanding of EFL learners' perceptions and preferences.

Data availability

All data generated or analysed during this study are included in this published article.

Received: 22 August 2024; Accepted: 24 April 2025;
Published online: 07 May 2025

References

Abdaljaleel M, Barakat M, Alsanafi M, Salim NA, Abazid H, Malaeb D, Mohammed AH et al. (2024) A multinational study on the factors influencing university students' attitudes and usage of ChatGPT. Sci Rep. 14(1):1983. https://doi.org/10.1038/s41598-024-52549-8

Abed SS (2024) Acceptance and use of artificial intelligence in online tourism services by Generation Z in Saudi Arabia. IEEE Access, 12. https://doi.org/10.1109/ACCESS.2024.3492001

Abedalrhman K, Alzaydi A (2024) Saudi Arabia's strategic leap towards a diversified economy and technological innovation. Asian J Adv Res Rep 18(12):111–125. https://doi.org/10.9734/ajarr/2024/v18i12810

Ajzen I (1991) The theory of planned behavior. Organ Behav Hum Decis Process 50(2):179–211. https://doi.org/10.1016/0749-5978(91)90020-T

Al-Abdullatif AM (2023) Modelling students' perceptions of chatbots in learning: Integrating technology acceptance with the value-based adoption model. Educ Sci 13(11):1151. https://doi.org/10.3390/educsci13111151

Albarrán Lozano IA, Molina JM, Gijón C (2021) Perception of artificial intelligence in Spain. Telemat Inf 63:101672. https://doi.org/10.1016/j.tele.2021.101672

Aldowsari BI, Aljebreen SG (2024) The impact of using a ChatGPT-based application to enhance Saudi students' EFL vocabulary learning. Int J Lang Lit Stud 6(4):380–397. https://doi.org/10.36892/ijlls.v6i4.1955

Alharthi SM (2024) Beyond traditional language learning: EFL student views on ChatGPT in Saudi Arabia. Arab World Engl J 10:15–35. https://doi.org/10.24093/awej/call10.2

Ali JKM (2023) Benefits and challenges of using ChatGPT: An exploratory study on English language program. Univ Bisha J Humanit 2(2):629–641

Al-kfairy M (2024) Factors impacting the adoption and acceptance of ChatGPT in educational settings: A narrative review of empirical studies. Appl Syst Innov 7(6):110. https://doi.org/10.3390/asi7060110

Alqahtani N (2024) Benefits, challenges, and attitudes toward ChatGPT in English writing courses at Saudi universities. Int J Lang Lit Stud 6(2):396–413. https://doi.org/10.36892/ijlls.v6i2.1739

Alsalem MS (2024) EFL students' perceptions and attitude towards the use of ChatGPT to promote English speaking skills in the Saudi context. Arab World Engl J 15(4):73–84. https://doi.org/10.24093/awej/vol15no4.5

Althubaiti H, Al Yousef ASA (2024) Exploring the acceptance of artificial intelligence in healthcare in Saudi Arabia. Int J Artif Intell Med Issues 2(1):12–17. https://doi.org/10.56705/ijaimi.v2i1.135

Antonietti C, Cattaneo A, Amenduni F (2022) Can teachers' digital competence influence technology acceptance in vocational education? Computers Hum Behav 132:107266. https://doi.org/10.1016/j.chb.2022.107266

Asad MM, Shahzad S, Shah SHA, Sherwani F, Almusharraf NM (2024) ChatGPT as artificial intelligence-based generative multimedia for English writing pedagogy: Challenges and opportunities from an educator's perspective. *Int J Inf Educ Technol* 41(5):490–506. https://doi.org/10.1108/IJILT-02-2024-0021

Bekou A, Ben Mhamed M, Assissou K (2024) Exploring opportunities and challenges of using ChatGPT in English language teaching (ELT) in Morocco. Focus ELT J 6(1):87–106. https://doi.org/10.14744/felt.6.1.7

Belda-Medina J, Calvo-Ferrer JR (2022) Using chatbots as AI conversational partners in language learning. Appl Sci 12(17):8427. https://doi.org/10.3390/app12178427

Bonfanti RC, Tommasi F, Ceschi A, Sartori R, Ruggieri S (2023) The antecedents of the technology acceptance model in microentrepreneurs' intention to use social networking sites. Eur J Investig Health, Psychol Educ 13(7):1306–1317. https://doi.org/10.3390/ejihpe13070096

Bouzar A, Idrissi KE, Ghourdou T (2024) Gender differences in perceptions and usage of ChatGPT. Int J Humanit Educ Res 6(02):571–582

Chocarro R, Cortiñas M, Marcos-Matás G (2023) Teachers' attitudes towards chatbots in education: A technology acceptance model approach considering the effect of social language, bot proactiveness, and users' characteristics. Educ Stud 49(2):295–313. https://doi.org/10.1080/03055698.2020.1850426

Communications, Space, and Technology Commission (2023) Saudi Internet 2023. Retrieved January 20, 2025, from https://www.cst.gov.sa/en/indicators/saudiinternet/saudi-internt-2023.pdf

Davis FD (1989) Perceived usefulness, perceived ease of use, and user acceptance of information technology. MIS Q 13(3):983–1003. https://doi.org/10.2307/249008

Davis FD (1986) A technology acceptance model for empirically testing new end-user information systems: Theory and results [Doctoral dissertation, MIT Sloan School of Management]. MIT Theses and Dissertations Archive. http://dspace.mit.edu/handle/1721.1/15192

de Andrés-Sánchez J, Gené-Albesa J (2023) Explaining policyholders' chatbot acceptance with a unified technology acceptance and use of technology-based model. J Theor Appl Electron Commer Res 18(3):1217–1237. https://doi.org/10.3390/jtaer18030062

Ebadi S, Amini A (2024) Examining the roles of social presence and human-likeness on Iranian EFL learners' motivation using artificial intelligence technology: A case of CSIEC chatbot. Interact Learn Environ 32(2):655–673. https://doi.org/10.1080/10494820.2022.2096638

Elshaer IA, Hasanein AM, Sobaih AEE (2024) The moderating effects of gender and study discipline in the relationship between university students' acceptance and use of ChatGPT. Eur J Investig Health, Psychol Educ 14(7):1981–1995. https://doi.org/10.3390/ejihpe14070132

Esiyok E, Gokcearslan S & Kucukergin, KG (2024). Acceptance of educational use of AI chatbots in the context of self-directed learning with technology and ICT self-efficacy of undergraduate students. Int J Hum-Compu Interact 1–10. https://doi.org/10.1080/10447318.2024.2303557

Fathi J, Rahimi M, Derakhshan A (2024) Improving EFL learners' speaking skills and willingness to communicate via artificial intelligence-mediated interactions. System 121:103254. https://doi.org/10.1016/j.system.2024.103254

Goli M, Sahu AK, Bag S, Dhamija P (2023) Users' acceptance of artificial intelligence-based chatbots: An empirical study. Int J Technol Hum Interact 19(1):1–18. https://doi.org/10.4018/IJTHI.318481

Goswami A, Dutta S (2016) Gender differences in technology usage: A literature review. Open J Bus Manag 4(1):51–59. https://doi.org/10.4236/ojbm.2016.41006

Han D (2021) An analysis of Korean EFL learners' experience on English classes using AI chatbot. Robot AI Ethics 6(3):1–9. https://doi.org/10.22471/ai.2021.6.3.01

Han DE (2020) The effects of voice-based AI chatbots on Korean EFL middle school students' speaking competence and affective domains. Asia-Pac J Convergent Res Interchange 6(7):71–80. https://doi.org/10.47116/apjcri.2020.07.07

Iancu I, Iancu B (2022) Interacting with chatbots later in life: A technology acceptance perspective in COVID-19 pandemic situation. Front Psychol 13:1111003. https://doi.org/10.3389/fpsyg.2022.1111003

Imran M, Almusharraf N (2023) Analyzing the role of ChatGPT as a writing assistant at higher education level: A systematic review of the literature. *Contemp Educ Technol* 15(4):ep464. https://doi.org/10.30935/cedtech/13605

Imran M, Almusharraf N, Abdellatif MS, Abbasova MY (2024) Artificial intelligence in higher education: Enhancing learning systems and transforming educational paradigms. *Int J Interact Mob Technol* 18(18):34–48. https://doi.org/10.3991/ijim.v18i18.49143

Jamshed M, Alqahtani N, Albedah F, Banu S (2024) Empowering Saudi EFL learners using ChatGPT: An analysis of challenges. Forum Linguistic Stud 6(6):516–527. https://doi.org/10.30564/fls.v6i6.7426

Jeon J (2024) Exploring AI chatbot affordances in the EFL classroom: Young learners' experiences and perspectives. Computer Assist Lang Learn 37(1–2):1–26. https://doi.org/10.1080/09588221.2021.2021241

Kamal SA, Shafiq M, Kakria P (2020) Investigating acceptance of telemedicine services through an extended technology acceptance model (TAM). Technol Soc 60:101212. https://doi.org/10.1016/j.techsoc.2019.101212

Kim HS, Cha Y, Kim NY (2021) Effects of AI chatbots on EFL students' communication skills. Korean J Engl Lang Linguist 21:712–734. https://doi.org/10.15738/kjell.21.202108.79544

Kim S, Park SH (2023) Young Korean EFL learners' perception of role-playing scripts: ChatGPT vs. textbooks. Korea J Engl Lang Linguist 23:1136–1153. https://doi.org/10.15738/kjell.23.202312.1136

Kline RB (2023) Principles and practice of structural equation modeling. Guilford Publications

Lee S, Jeon J, Choe H (2024) Enhancing pre-service teachers' global Englishes awareness with technology: A focus on AI chatbots in 3D metaverse environments. TESOL Quarterly. https://doi.org/10.1002/tesq.3300

Li K (2023) Determinants of college students' actual use of AI-based systems: An extension of the technology acceptance model. Sustainability 15(6):5221. https://doi.org/10.3390/su15065221

Liu G, Ma C (2024) Measuring EFL learners' use of ChatGPT in informal digital learning of English based on the technology acceptance model. Innov Lang Learn Teach 18(2):125–138. https://doi.org/10.1080/17501229.2023.2240316

Ma J, Wang P, Li B, Wang T, Pang XS, Wang D (2024) Exploring user adoption of ChatGPT: A technology acceptance model perspective. Int J Hum –Computer Interact 41(2):1431–1445. https://doi.org/10.1080/10447318.2024.2314358

Menon D, Shilpa K (2023) Chatting with ChatGPT': Analyzing the factors influencing users' intention to use the Open AI's ChatGPT using the UTAUT model. Heliyon 9(11):e20962. https://doi.org/10.1016/j.heliyon.2023.e20962

Mohamed AM (2024) Exploring the potential of an AI-based chatbot (ChatGPT) in enhancing English as a foreign language (EFL) teaching: Perceptions of EFL faculty members. Educ Inf Technol 29(3):3195–3217. https://doi.org/10.1007/s10639-023-11917-z

Mugableh AI (2024) The impact of ChatGPT on the development of vocabulary knowledge of Saudi EFL students. Arab World Eng J. Special Issue on ChatGPT, 265–281. https://doi.org/10.24093/awej/ChatGPT.18

Ozfidan B, El-Dakhs DAS, Alsalim LA (2024) The use of AI tools in English academic writing by Saudi undergraduates. Contemp Educ Technol 16(4):ep527. https://doi.org/10.30935/cedtech/15013

Panagiotarou A, Stamatiou YC, Pierrakeas C, Kameas A (2020) Gamification acceptance for learners with different e-skills. Int J Learn, Teach Educ Res 19(2):263–278. https://doi.org/10.26803/ijlter.19.2.16

Park ES, Park MS (2020) Factors of the technology acceptance model for construction IT. Appl Sci 10(22):8299. https://doi.org/10.3390/app10228299

Qasem F, Ghaleb M, Mahdi HS, Al Khateeb A, Al Fadda H (2023) Dialog chatbot as an interactive online tool in enhancing ESP vocabulary learning. Saudi J Lang Stud 3(2):76–86. https://doi.org/10.1108/SJLS-10-2022-0072

Qu K, Wu X (2024) ChatGPT as a CALL tool in language education: A study of hedonic motivation adoption models in English learning environments. Edu Info Technol 1–33. https://doi.org/10.1007/s10639-024-12598-y

Research and Markets (2024) EdTech in Saudi Arabia. Retrieved January 24, 2025, from https://www.researchandmarkets.com/report/saudi-arabia-education-software-market

Romero-Rodríguez J-M, Ramírez-Montoya M-S, Buenestado-Fernández M, Lara-Lara F (2023) Use of ChatGPT at university as a tool for complex thinking: Students' perceived usefulness. J N. Approaches Educ Res 12(2):323–339. https://doi.org/10.7821/naer.2023.7.1458

Saif N, Khan SU, Shaheen I, Alotaibi FA, Alnfiai MM, Arif M (2024) Chat-GPT; validating technology acceptance model (TAM) in education sector via ubiquitous learning mechanism. Computers Hum Behav 154:108097. https://doi.org/10.1016/j.chb.2023.108097

Sallam M, Al-Saleh M, Garad W, Alhaj N, Malkawi D, Al-Tarawneh R, Al-Tamimi A, Al-Maharma D, Alkhatib M, Alhaddad M, Alhaj S, & Al-Tamimi N (2024) ChatGPT usage and attitudes are driven by perceptions of usefulness, ease of use, risks, and psycho-social impact: A study among university students in the UAE. *Frontiers in Education*, 9:1414758. https://doi.org/10.3389/feduc.2024.1414758

Saudi Data and Artificial Intelligence Authority. (n.d.). Retrieved January 24, 2025, from https://sdaia.gov.sa/ar/default.aspx

Shaengchart Y (2023) A conceptual review of TAM and ChatGPT usage intentions among higher education students. Adv Knowl Executives 2(3):1–7

Sobaih AEE, Elshaer IA, Hasanein AM (2024) Examining students' acceptance and use of ChatGPT in Saudi Arabian higher education. Eur J Investig Health, Psychol Educ 14(3):709–721

Song C, Song Y (2023) Enhancing academic writing skills and motivation: Assessing the efficacy of ChatGPT in AI-assisted language learning for EFL students. Front Psychol 14:1260843. https://doi.org/10.3389/fpsyg.2023.1260843

Strzelecki A (2024) Students' acceptance of ChatGPT in higher education: An extended unified theory of acceptance and use of technology. Innovative High Educ 49(2):223–245. https://doi.org/10.1007/s10755-023-09686-1

Venkatesh V, Bala H (2008) Technology acceptance model 3 and a research agenda on interventions. Decis Sci 39(2):273–315

Vo TKA, Nguyen H (2024) Generative artificial intelligence and ChatGPT in language learning: EFL students' perceptions of technology acceptance. J Univ Teach Learn Pract 21(6). https://doi.org/10.53761/fr1rkj58

Wang C, Ahmad SF, Ayassrah AYAB, Awwad EM, Irshad M, Ali YA, Al-Razgan M, Khan Y, Han H (2023) An empirical evaluation of technology acceptance model for artificial intelligence in e-commerce. Heliyon 9(8):e18349. https://doi.org/10.1016/j.heliyon.2023.e18349

Xiao Y, Zhi Y (2023) An exploratory study of EFL learners' use of ChatGPT for language learning tasks: Experience and perceptions. Languages 8(3):212. https://doi.org/10.3390/languages8030212

Yang H, Kim H, Lee JH, Shin D (2022) Implementation of an AI chatbot as an English conversation partner in EFL speaking classes. ReCALL 34(3):327–343. https://doi.org/10.1017/S0958344022000039

Yang Y, Wang X (2019) Modeling the intention to use machine translation for student translators: An extension of technology acceptance model. Computers Educ 133:116–126. https://doi.org/10.1016/j.compedu.2019.01.015

Yeh S-C, Wu A-W, Yu H-C, Wu HC, Kuo Y-P, Chen P-X (2021) Public perception of artificial intelligence and its connections to the sustainable development goals. Sustainability 13(16):9165. https://doi.org/10.3390/su13169165

Yilmaz H, Maxutov S, Baitekov A, Balta N (2023) Student attitudes towards Chat GPT: A technology acceptance model survey. Int Educ Rev 1(1):57–83. https://doi.org/10.58693/ier.114

Zhou J, Ke P, Qiu X, Huang M, Zhang J (2023) ChatGPT: Potential, prospects, and limitations. Front Inf Technol Electron Eng 25(1):6–11. https://doi.org/10.1631/FITEE.2300089

Zou M, Huang L (2023) To use or not to use? Understanding doctoral students' acceptance of ChatGPT in writing through technology acceptance model. Front Psychol 14:1259531. https://doi.org/10.3389/fpsyg.2023.1259531

Acknowledgements

The researchers thank Prince Sultan University for funding this research project through the Language and Communication Research Lab (RL-CH-2019/9/1). The authors acknowledge the use of ChatGPT (accessed January 2025) exclusively for proofreading and formatting the reference list in the final version of this manuscript. We confirm that no AI tools were utilized in the data gathering or analysis phases.

Author contributions

All authors (HA, SS, DA) contributed equally to the study conception and design. They also participated in material preparation, data collection, and analysis, as well as the writing and revision of the manuscript.

Competing interests

The authors declare no competing interests.

Ethical approval

This study was approved by the Human Research Ethics Committee of King Saud University (Approval No. HE-23-1279). All research was conducted in accordance with the relevant guidelines and regulations, including the Declaration of Helsinki. The approval was granted on 24th Jan. 2024, and it covers all aspects of the research involving human participants. No modifications to the research protocol were made after the approval was obtained.

Informed consent

Informed consent was obtained from all participants prior to their completion of the online questionnaire. The consent was part of the online questionnaire which was administered between January and May 2024. Participants were fully informed about the nature of the study, their rights, and the handling of their personal data. All measures were taken to ensure the confidentiality and anonymity of the participants throughout the research process.

Disclosue

All research activities and findings are the result of the authors' original work and integrity.

Additional information

Supplementary information The online version contains supplementary material available at https://doi.org/10.1057/s41599-025-04945-2.

Correspondence and requests for materials should be addressed to Hind M. Alotaibi.

Reprints and permission information is available at http://www.nature.com/reprints

Publisher's note Springer Nature remains neutral with regard to jurisdictional claims in published maps and institutional affiliations.

Open Access This article is licensed under a Creative Commons Attribution 4.0 International License, which permits use, sharing, adaptation, distribution and reproduction in any medium or format, as long as you give appropriate credit to the original author(s) and the source, provide a link to the Creative Commons licence, and indicate if changes were made. The images or other third party material in this article are included in the article's Creative Commons licence, unless indicated otherwise in a credit line to the material. If material is not included in the article's Creative Commons licence and your intended use is not permitted by statutory regulation or exceeds the permitted use, you will need to obtain permission directly from the copyright holder. To view a copy of this licence, visit http://creativecommons.org/licenses/by/4.0/.

© The Author(s) 2025