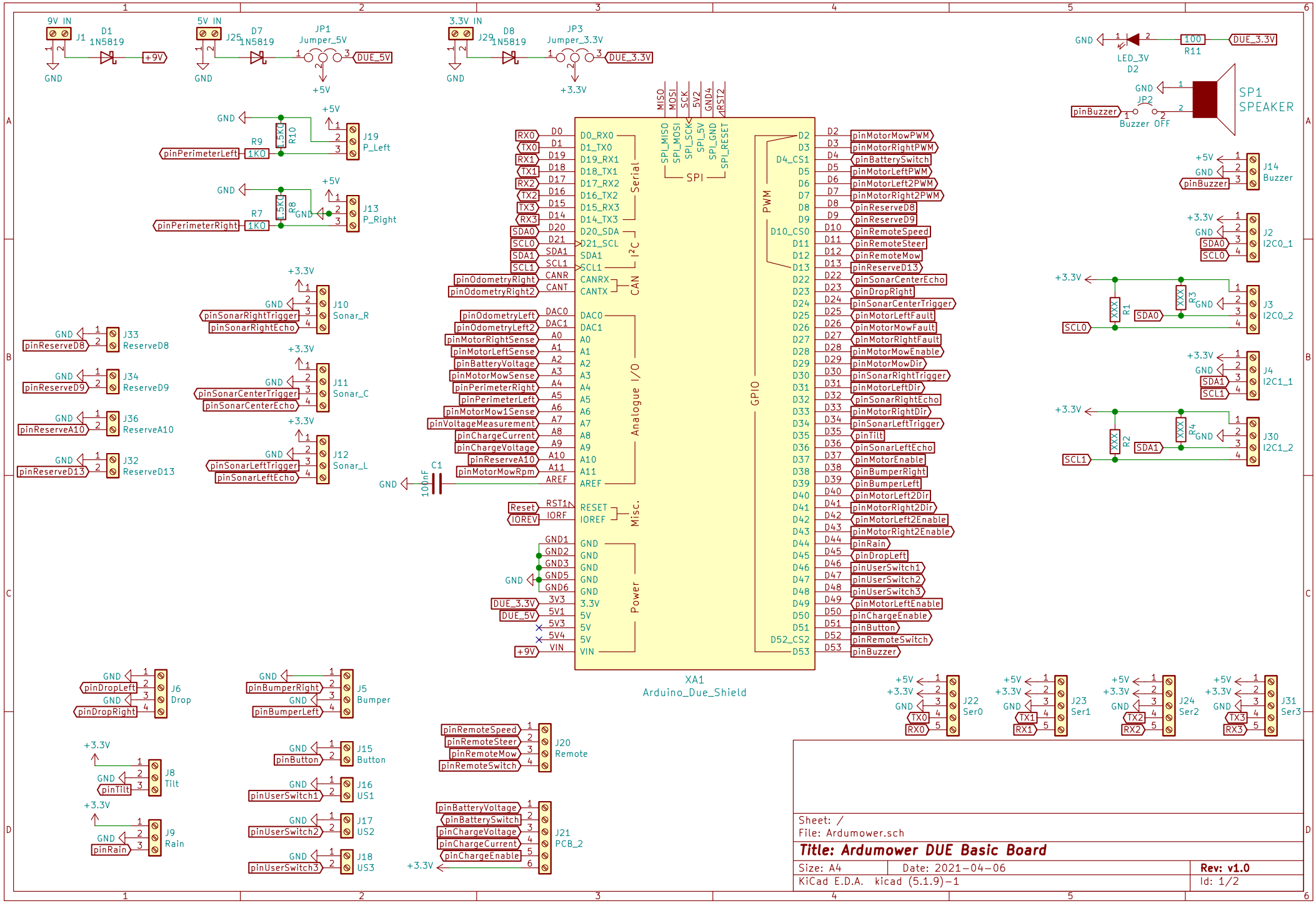
9V IN
J1
D1
1N5819
+9V
GND
5V IN
J25
D7
1N5819
JP1
Jumper_5V
DUE_5V
+5V
3.3V IN
J29
D8
1N5819
JP3
Jumper_3.3V
DUE_3.3V
+3.3V
GND
LED_3V
D2
100
R11
DUE_3.3V
SP1
SPEAKER
JP2
Buzzer OFF
pinBuzzer
J19
P_Left
R9
1K0
1.5K
R10
pinPerimeterLeft
J13
P_Right
R7
1K0
1.5K
R8
pinPerimeterRight
J14
Buzzer
J2
I2C0_1
J3
I2C0_2
R1
R3
XXX
J4
I2C1_1
J30
I2C1_2
R2
R4
J10
Sonar_R
pinSonarRightTrigger
pinSonarRightEcho
J11
Sonar_C
pinSonarCenterTrigger
pinSonarCenterEcho
J12
Sonar_L
pinSonarLeftTrigger
pinSonarLeftEcho
J33
ReserveD8
J34
ReserveD9
J36
ReserveA10
J32
ReserveD13
C1
100nF
MISO
MOSI
SCK
5V2
GND4
RST2
SPI_MISO
SPI_MOSI
SPI_SCK
SPI_5V
SPI_GND
SPI_RESET
SPI
Serial
I2C
CAN
Analogue I/O
Misc.
Power
PWM
GPIO
XA1
Arduino_Due_Shield
J6
Drop
pinDropLeft
pinDropRight
J5
Bumper
pinBumperRight
pinBumperLeft
J8
Tilt
pinTilt
J9
Rain
pinRain
J15
Button
pinButton
J16
US1
pinUserSwitch1
J17
US2
pinUserSwitch2
J18
US3
pinUserSwitch3
J20
Remote
pinRemoteSpeed
pinRemoteSteer
pinRemoteMow
pinRemoteSwitch
J21
PCB_2
pinBatteryVoltage
pinBatterySwitch
pinChargeVoltage
pinChargeCurrent
pinChargeEnable
J22
Ser0
J23
Ser1
J24
Ser2
J31
Ser3
Sheet: /
File: Ardumower.sch
Title: Ardumower DUE Basic Board
Size: A4
Date: 2021-04-06
Rev: v1.0
KiCad E.D.A. kicad (5.1.9)-1
Id: 1/2

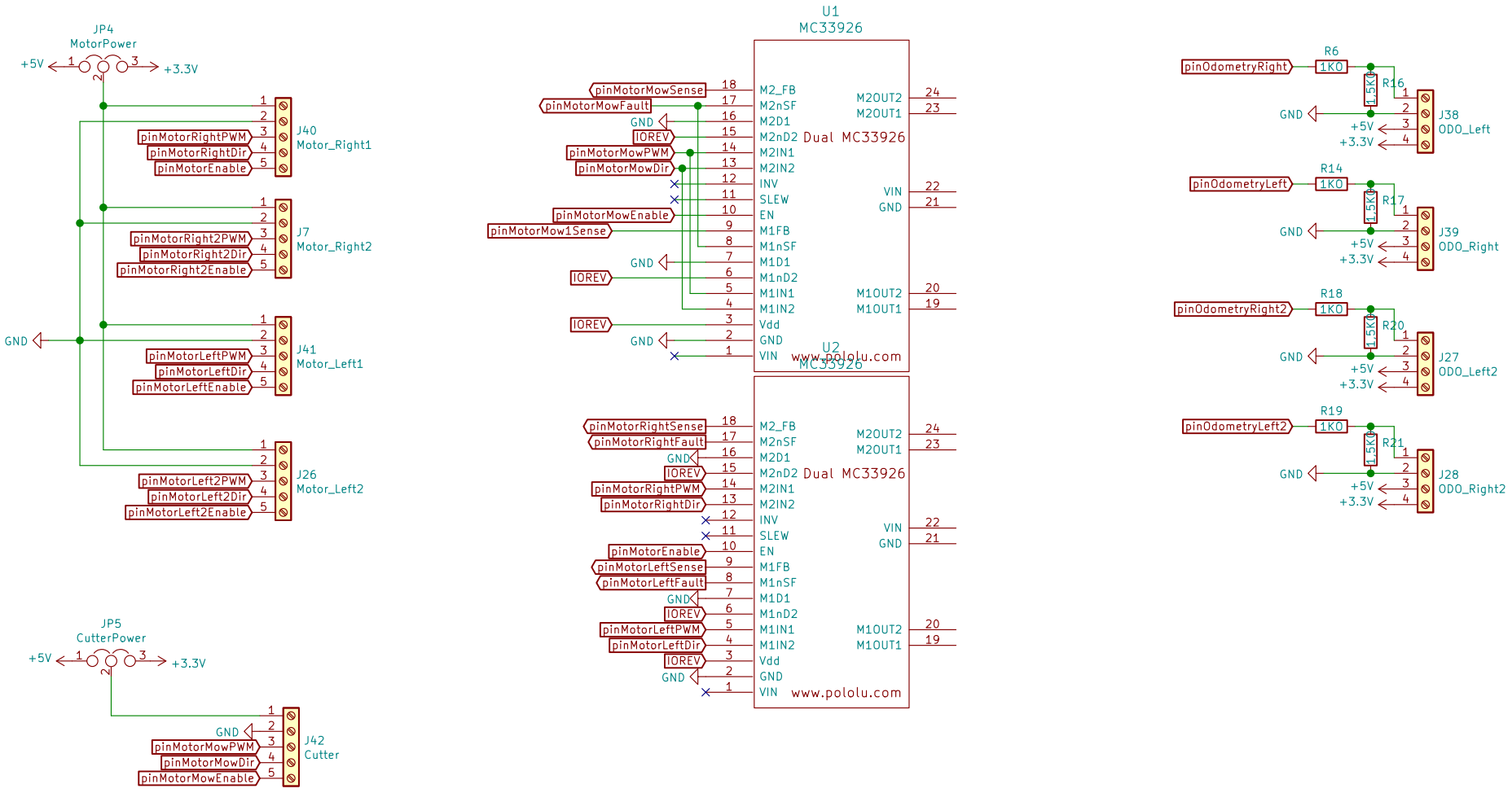

Sheet: /Connector_Motor/
File: file609243F3.sch

Title:

Size: A4	Date:	**Rev:**
KiCad E.D.A. kicad (5.1.9)-1		Id: 2/2