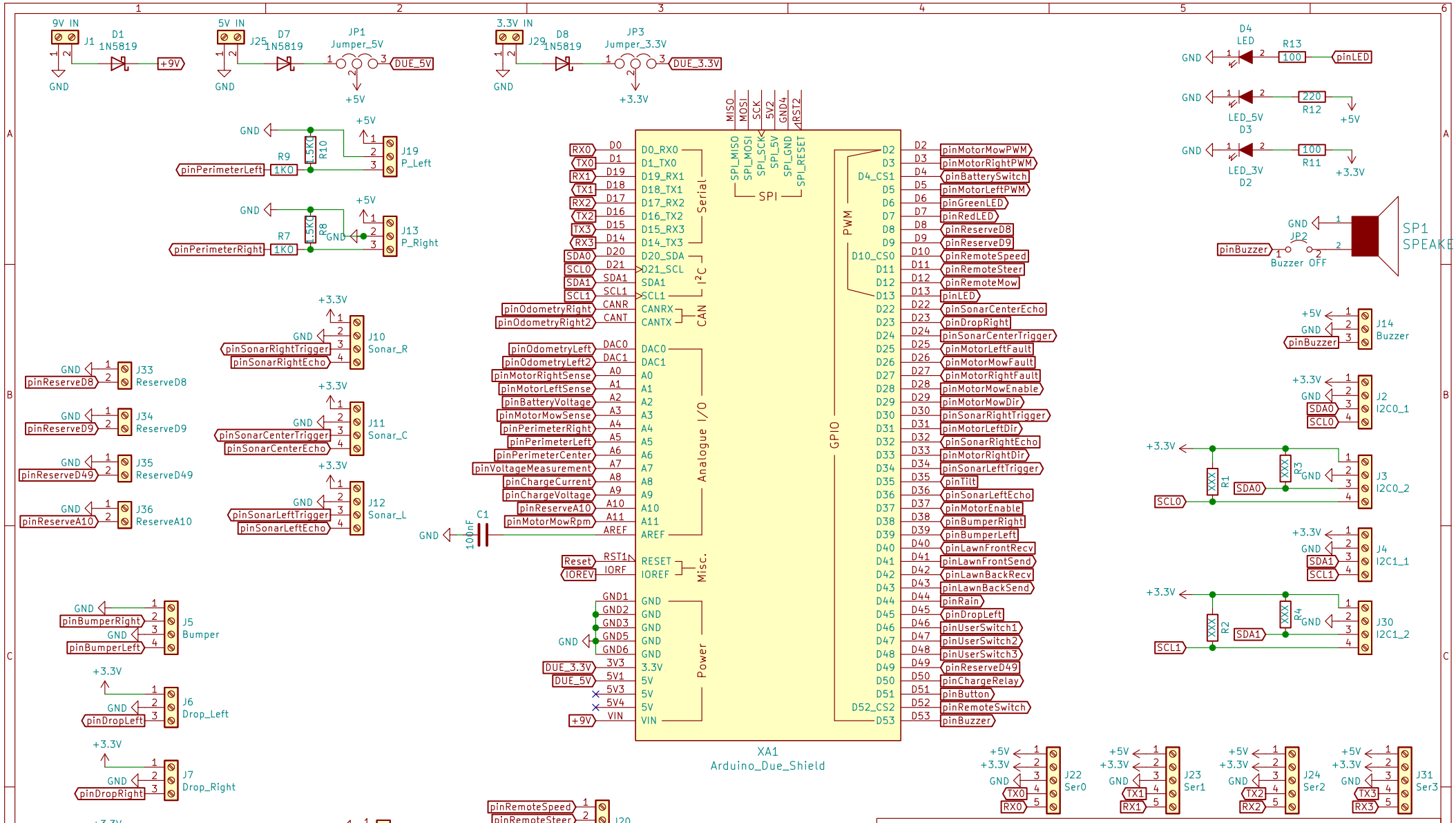

Sheet: /
File: Ardumower.sch

Title: Ardumower DUE Basic Board

Size: A4	Date: 2021-04-06	Rev: v1.0
KiCad E.D.A. kicad (5.1.9)-1		Id: 1/2

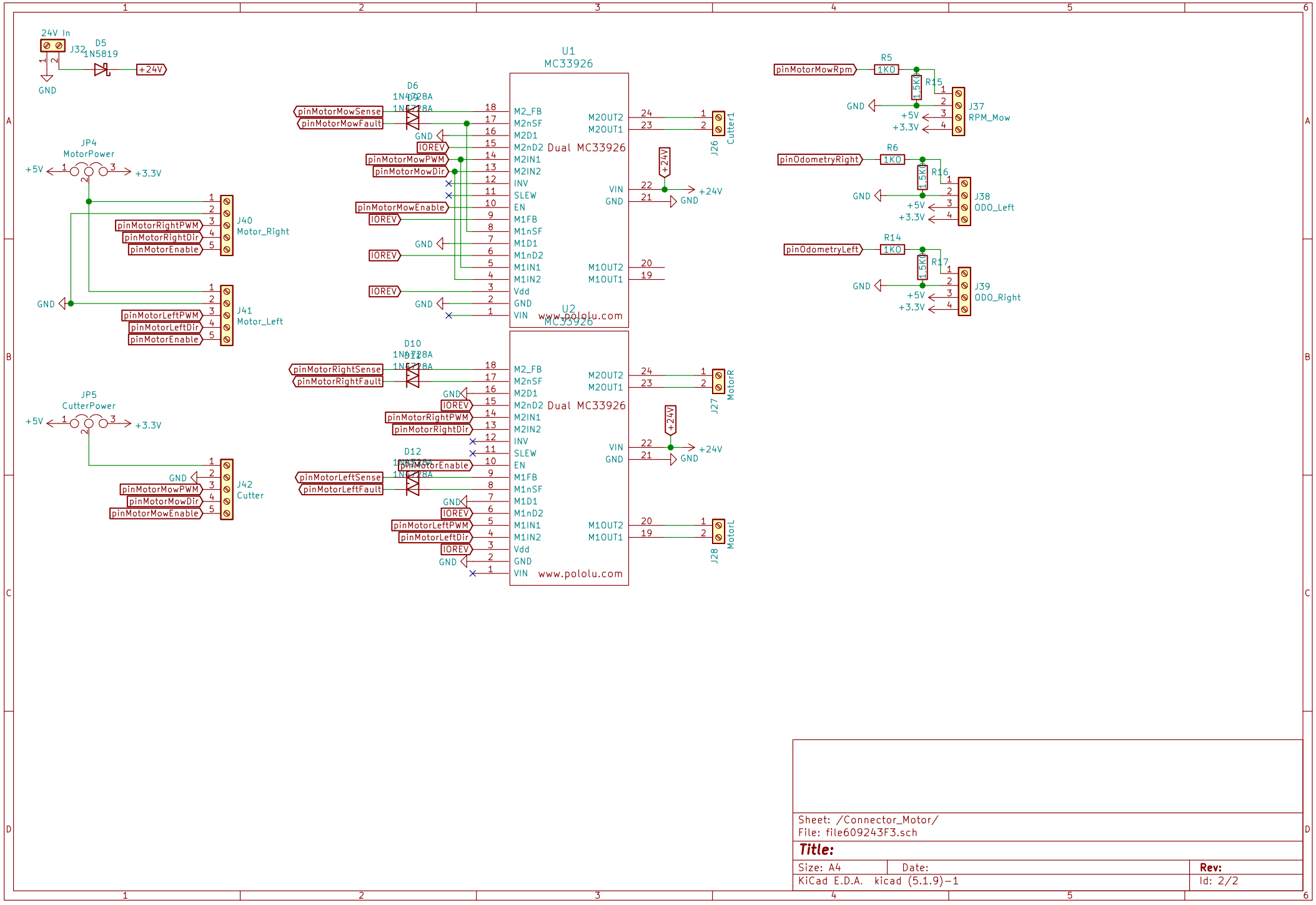

Sheet: /Connector_Motor/
File: file609243F3.sch

Title:

Size: A4	Date:	Rev:
KiCad E.D.A. kicad (5.1.9)-1		Id: 2/2