CONNECTORS — preserved foundation pin map

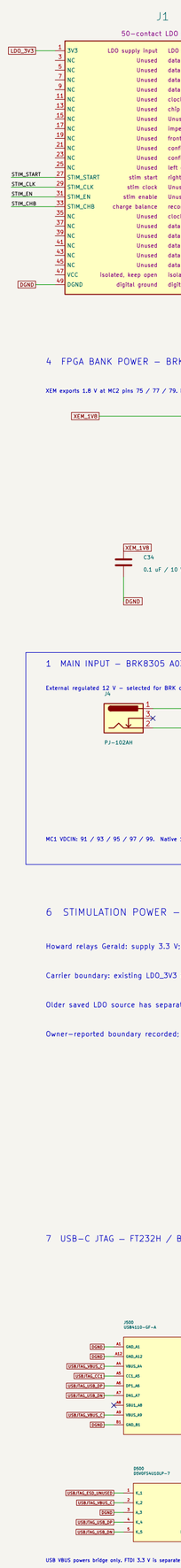

4 FPGA BANK POWER — BRK8305 A03

XEM exports 1.8 V at MC2 pins 75 / 77 / 79. No additional regulator.

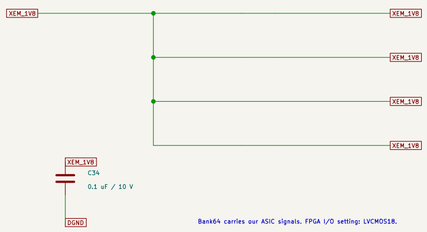

Bank64 carries our ASIC signals. FPGA I/O setting: LVCMOS18.

1 MAIN INPUT — BRK8305 A03

External regulated 12 V — selected for BRK converter. Center positive.

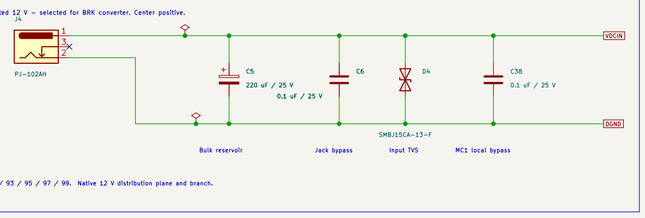

MC1 VDCIN: 91 / 93 / 95 / 97 / 99. Native 12 V distribution plane and branch.

6 STIMULATION POWER — LDO BOARD RESPONSIBILITY

Howard relays Gerald: supply 3.3 V; the LDO board handles stimulation power.

Carrier boundary: existing LDO_3V3 feed. No extra stimulation converters selected.

Older saved LDO source has separate J15 / J8 inputs; verify the matching revision.

Owner-reported boundary recorded; the older source is not proof of 3.3 V-only operation.

7 USB-C JTAG — FT232H / BRK8305-DERIVED / 1.8 V TARGET

USB VBUS powers bridge only. FTDI 3.3 V is separate from LDO 3.3 V.

USB shield: BRK fitted C522 + FB503; source DNP shunts remain omitted.

Blank EEPROM requires AMD program_ftdi provisioning: validate discovery / IDCODE / ILA.

POWER FLOW

12 V enters J4 and becomes VDCIN.

VDCIN powers the XEM through MC1.

U10 / L14 make BUCK_3V3; JP1 connects it to LDO_3V3.

LDO_3V3 feeds LDO J1 pins 1 and 2.

XEM 1.8 V directly feeds all four FPGA banks; ASIC supplies stay on the LDO board.

3 TEST / EXTERNAL 3.3 V INPUT

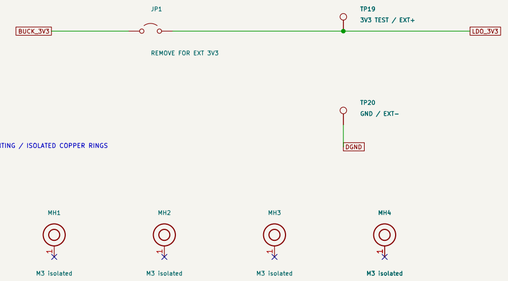

8 XEM MOUNTING / ISOLATED COPPER RINGS

Four plated holes: 3.2 mm bore / 6.4 mm ring. Electrically isolated.

XEM nominal connector stack: 5.0 mm; choose matching standoffs.

5 INTERNAL FPGA MONITOR REFERENCE

VREFP directly connects to module GNDADC for internal reference; GNDADC stays separate from DGND.

2 3.3 V SUPPLY FOR THE EXISTING LDO BOARD

12 V -> BRK converter -> JP1 -> LDO J1 pins 1 / 2

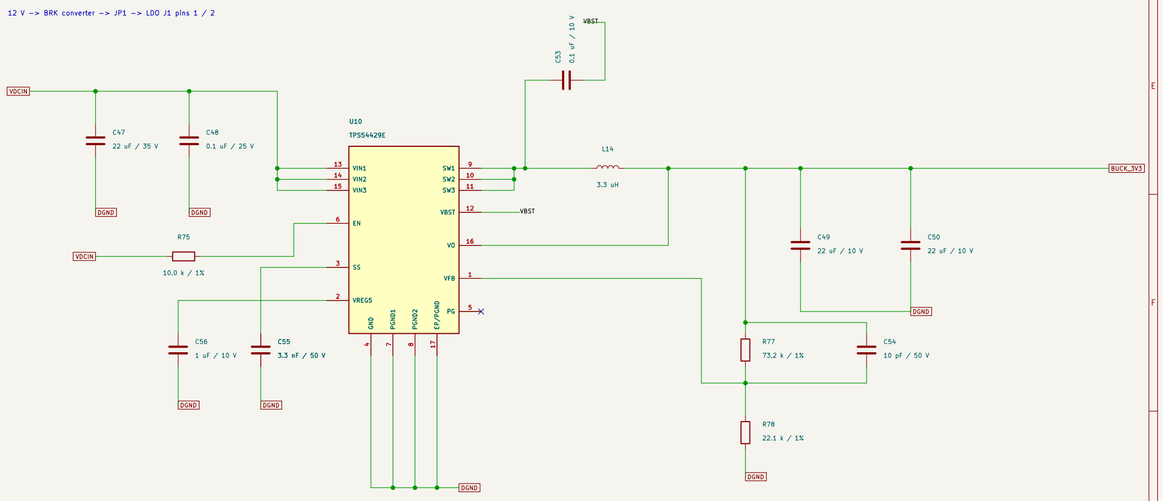

C47 / C48: input bypass. L14 + C49 / C50: output filter. R77 / R78 + C54: feedback.

C53: bootstrap. C55: soft start. C56: bias bypass. R75: always-on enable: XEM_PG link omitted.

LDO assembly revision / ground return and hardware operation remain review items.

53 x 83 mm carrier; isolated XEM mounts; onboard USB-C JTAG review

Sheet: /
File: CARRIER_XEM8305_R11_Complete_3D_BRK_JTAG.kicad_sch

Title: XEM8305 / LDO carrier — connectors and power on one page

Size: User	Date: 2026-10-09	Rev: C4.8-R11-COMPLETE-3
KiCad E.D.A. 10.0.6		Id: 1/1