NEHRU INSTITUTE OF ENGINEERING AND TECHNOLOGY

(An Autonomous Institution, Affiliated to Anna university, Chennai)

DEPARTMENT OF INFORMATION TECHNOLOGY

A SMART AGRICULTURE FRAMEWORK FOR LEAF DISEASE DETECTION AND AUTOMATED FERTILIZER RECOMMENDATION USING DEEP LEARNING AND EDGE COMPUTING

GUIDE:

Mrs. T COWSALYA

Assistant Professor

Department of Information Technology

NIET

DOMAIN NAME:

MACHINE LEARNING

TEAM MEMBERS:

EZHILARASAN A [721422205021]

JAYAPRADPA J [72142205027]

NAGENDHIRAN V [72142220538]

SRINATH N [721422205050]

ABSTRACT

- Agriculture productivity is highly affected by plant diseases, which reduce crop quality and yield if not detected early. This project proposes an automated leaf disease detection system using image processing and artificial neural network techniques.

- The system captures leaf images, processes them, and identifies the disease based on extracted features. After detecting the disease, the system recommends the appropriate fertilizer for treatment. Based on the identified disease, the system automatically activates the fertilizer spraying pump.

- This approach helps farmers detect diseases early and apply the correct treatment, improving crop productivity and reducing manual monitoring efforts.

INTRODUCTION

- Agriculture plays a vital role in food production and economic development. However, plant diseases significantly affect crop growth and reduce agricultural productivity.

- Early identification of leaf diseases is essential to prevent crop damage and ensure healthy plant growth. With the help of modern technologies such as image processing and artificial intelligence, plant diseases can be detected automatically.

- This project focuses on detecting leaf diseases and recommending suitable fertilizers for treatment. The system also activates a fertilizer spraying mechanism to support efficient and timely crop management

EXISTING SYSTEM

In the existing system, plant disease detection is mainly performed using basic image processing techniques. A study titled ***Plant Leaf Disease Detection Using Image Processing by S. Arivazhagan (2016)*** explains that leaf images are captured and processed using segmentation and feature extraction methods to identify disease symptoms. The system analyzes color, texture, and pattern variations on the leaf surface to classify diseases. However, this approach mainly focuses only on disease identification and does not provide automatic treatment or fertilizer recommendation. It also requires manual monitoring and does not include any automated fertilizer spraying mechanism, which limits its practical use in real-time agricultural applications

DISADVANTAGE

- **Only detects disease** –does not provide treatment or fertilizer suggestions.
- **No automation** –fertilizer or pesticide spraying is not automatic.
- **Needs manual monitoring** – farmers must continuously check and capture images.
- **Less accurate** –basicimage processing may give incorrect results under different lighting conditions.

LITERATURE SURVEY

S. No	Paper Title	Year of publication, Vol No., Issue No., PP	Journal Name / Authors	Methodology	Merits/Demerits
1.	Plant Leaf Disease Detection Using Deep Learning.	2024	***Author:*** Md Abu Bakar Laskar et al. ***Journal:*** LC International Journal of STEM	Deep learning model (YOLO-based detection) is used to identify diseases from leaf images and classifying them automatically.	***Merits:*** High detection accuracy Fast disease identification ***Demerits:*** Requires large training dataset Needs high processing power

LITERATURE SURVEY

S. No	Paper Title	Authors & Publications	Methodology	Merits/Demerits
2.	Deep Learning for Automated Diagnosis of Plant Diseases	2024 ***Author:*** Ashok Kumar, Pankaj Kumar ***Journal:*** Journal of Electrical Systems	Convolutional Neural Network (CNN) models are used to analyze leaf images and automatically classify plant diseases.	***Merits:*** Automatic disease detection Improves crop monitoring ***Demerits:*** Sensitive to image quality Requires large training data

LITERATURE SURVEY

S. No	Paper Title	Yearof publication, Vol No., Issue No., PP	Journal Name / Authors	Methodology	Merits/Demerits
3.	Plant Disease Detection Using Deep Learning Techniques	2025	***Author:*** Zunaira Zainab, Rabbia Mahum ***Journal:*** ICCK Journal of Image Analysis and Processing	Deep learning algorithms analyze plant leaf images to detect disease patterns and classify infected leaves.	***Merits:*** Accuratedisease classification Early disease detection ***Demerits:*** Computationally expensive Requires high-quality datasets

LITERATURE SURVEY

S. No	Paper Title	Authors & Publications	Methodology	Merits/Demerits
4.	Advancing Plant Leaf Disease Detection Integrating Machine Learning and Deep Learning	2025	Combines machine learning and deep learning techniques to extract features from plant leaf images and classify diseases automatically.	***Merits:*** Improved accuracy Effective feature extraction ***Demerits:*** Complex system design Requires large dataset

PROPOSED SYSTEM

This proposed paper offers a candid and computationally resourceful manner which is useful in the leaf disease detection and selection of fertilizers using artificial neural network. This proposed system involves different concepts related to image processing such as image acquisition, image preprocessing, feature extraction, artificial neural network based training, classification, diagnosis and treatment by using artificial neural network. In this performance, database is a accumulation of different texture features of some leaves. In this project it is possible to get the disease name and also we can get the fertilizer which is precise for that disease. But in previous attempts it was not happen so because of this we proposed this project, it is better and gives good performance compared to other processing system.

ADVANTAGE

Accurate Disease Detection : Uses ANN to identify leaf diseases correctly.

Provides Fertilizer Suggestion : Suggests the correct fertilizer for each detected disease.

Saves Time and Effort : Reduces manual checking by farmers.

Better than Existing Systems : Detects disease and gives treatment, unlike older methods.

BLOCK DIAGRAM

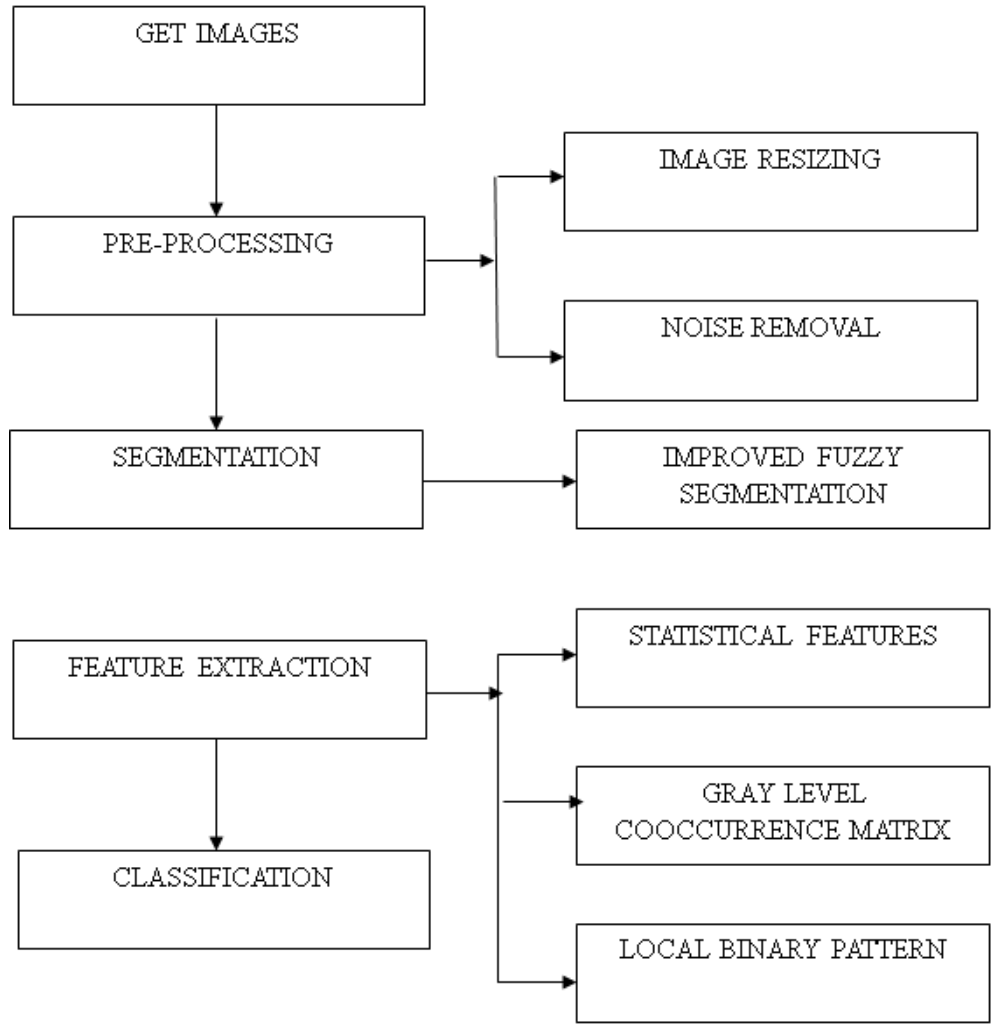

ARCHITECTURE DIAGRAM

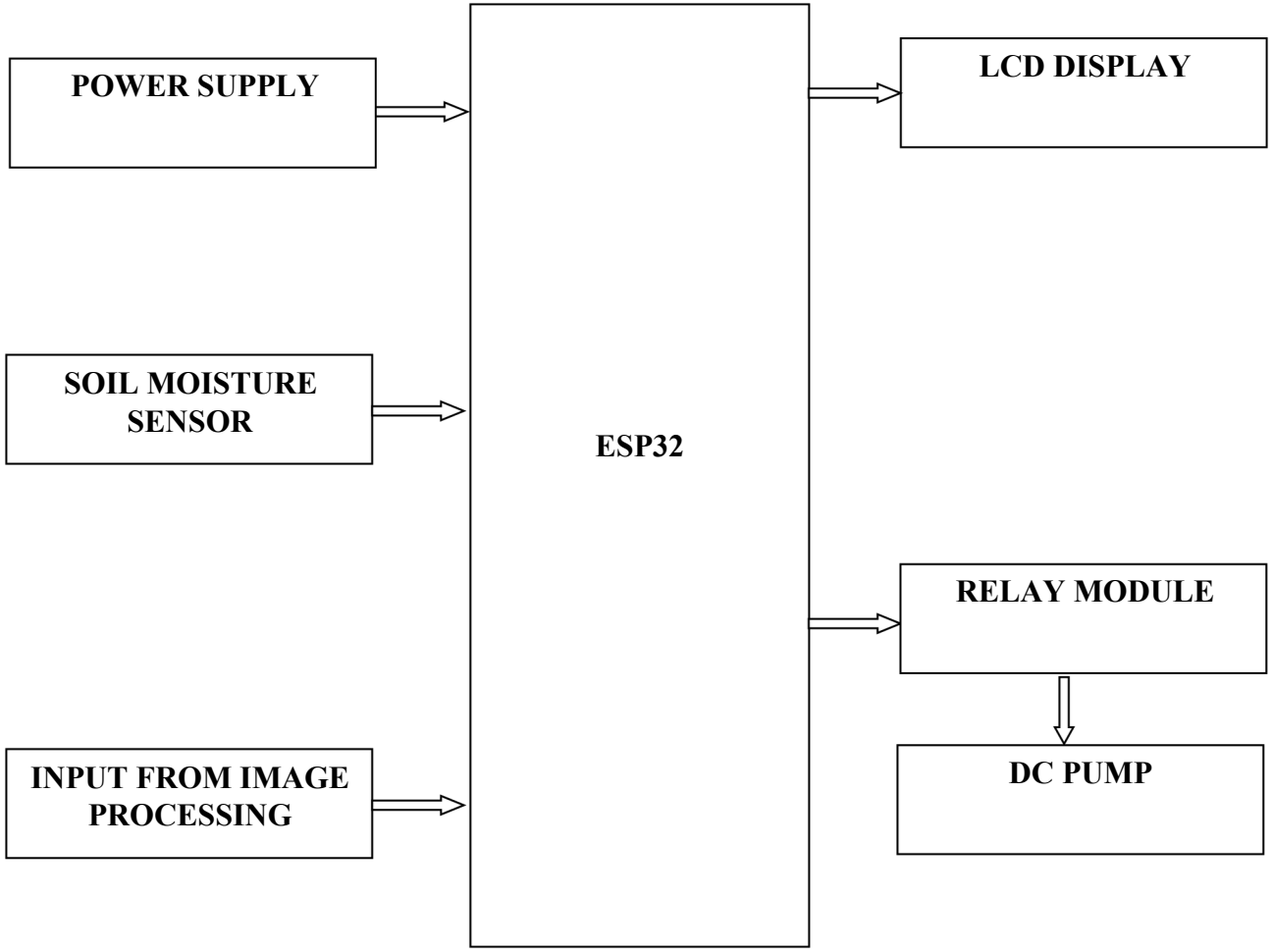

SYSTEM REQUIREMENTS

4.1 HARDWARE REQUIREMENTS

ESP32 MICROCONTROLLER

POWER SUPPLY

RELAY MODULE

DC PUMP

4.2 SOFTWARE REQUIREMENTS

Operating System: Windows Server

Programming Language: M scripts

Machine Learning Models: ANN

MODULES

- Image Acquisition Module
- Image Pre-processing Module
- Feature Extraction Module
- Disease Classification Module
- Fertilizer Recommendation Module
- Automatic Fertilizer Spraying Module

MODULE DESCRIPTION

1. Image Acquisition Module

This module is responsible for capturing images of plant leaves using a digital camera or mobile camera. The captured images serve as the input for the disease detection system. Clear and high-quality images help in improving the accuracy of disease identification. ***2. Image Pre-processing Module***

In this stage, the captured images are processed to remove noise and improve image quality. Techniques such as filtering, resizing, and color enhancement are applied. This step ensures that the image is suitable for further analysis.

MODULE DESCRIPTION

3. Feature Extraction Module

This module extracts important features from the processed leaf images. Features such as color, texture, and shape of the leaf are analyzed. These characteristics help in identifying the symptoms of plant diseases.

4. Disease Classification Module

In this module, machine learning or neural network algorithms are used to classify the type of disease affecting the leaf. The system compares the extracted features with the trained dataset to identify the specific disease.

MODULE DESCRIPTION

5. Fertilizer Recommendation Module

After identifying the disease, the system determines the appropriate fertilizer or treatment required for that particular disease. This helps farmers apply the correct fertilizer for plant recovery.

6. Automatic Fertilizer Spraying Module

This module automatically activates the fertilizer spraying pump based on the detected disease. The system controls the pump using a controller and relay circuit to spray the required fertilizer on the affected plants.

SAMPLE CODE

```
clc
clear all
close all
% Get The Image
[FN,PN]=uigetfile('.jpg');
IM1=imread([PN FN]);
figure,imshow(IM1)
title('Input Image');
% pre processing
% 1. Resizing
IM2=imresize(IM1,[256,256]);
figure,imshow(IM2)
title('Resized Image');
```

SAMPLE OUTPUT

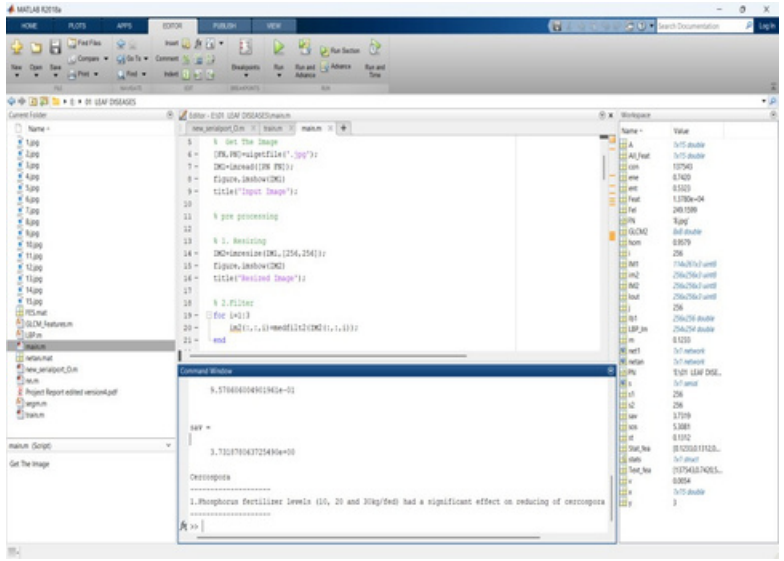

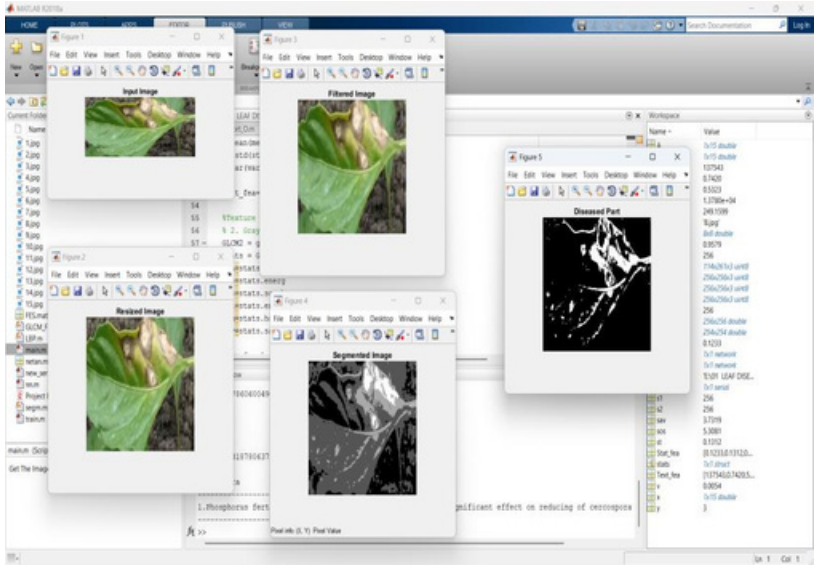

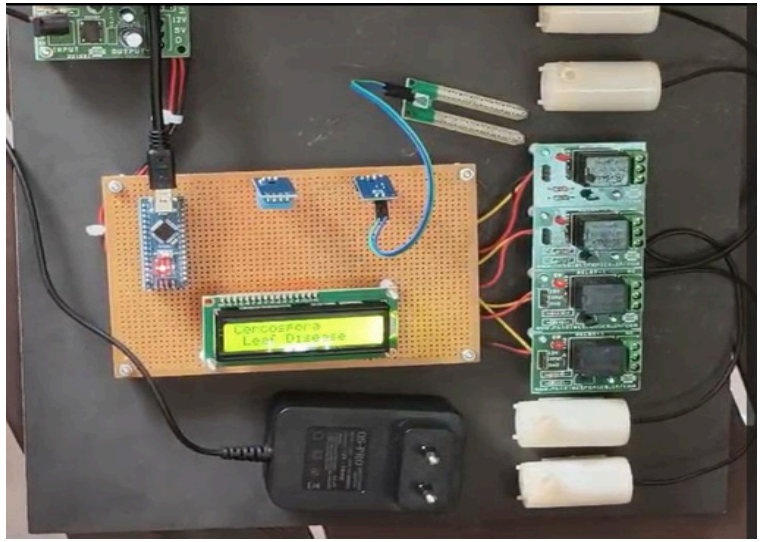

CONCLUSION

- The proposed system effectively detects plant leaf diseases at an early stage using image processing techniques. Early detection helps prevent the spread of disease and protects the overall health of the plant.

- The developed method provides accurate identification of different leaf diseases and suggests the appropriate fertilizer for treatment. This helps farmers take timely action and improve crop productivity.

- The use of image processing, feature extraction, and classification techniques improves the efficiency and reliability of the system. As a result, the system provides better disease detection and supports smart agricultural practices.

FUTURE ENHANCEMENT

In the future, the system can be improved by integrating ***IoT technology*** to monitor plant health remotely through mobile or web applications. This will allow farmers to receive real-time alerts about plant diseases.

• Advanced ***machine learning and deep learning algorithms*** can be used to increase the accuracy of disease detection and support identification of a larger number of plant diseases.

• The system can also be expanded to control ***automatic irrigation and fertilizer management***, making it a complete smart agriculture solution for improving crop productivity.

REFERENCES

[[1] S. P. Mohanty, D. P. Hughes, and M. Salathé, “Using Deep Learning for Image-Based Plant Disease Detection,” *Frontiers in Plant Science*,vol. 7, pp. 1–10, 2016.

[2] K. P. Ferentinos, “Deep learning models for plant disease detection and diagnosis,” *Computers and Electronics in Agriculture*, vol. 145, pp. 311–318, 2018.

[3] S. Sladojevic, M. Arsenovic, A. Anderla, D. Culibrk, and D. Stefanovic, “Deep Neural Networks Based Recognition of Plant Diseases by Leaf Image Classification,” *Computational Intelligence and Neuroscience*, pp. 1–11, 2016.

[4] P. Picon, A. Bereciartua, A. Alvarez-Gila, et al., “Deep Convolutional Neural Networks for Mobile Capture Device-Based Crop Disease Classification in the Wild,” *Computers and Electronics in Agriculture*,vol. 161, pp. 280–290, 2019.

[5] A. Kamilaris and F. X. Prenafeta-Boldú, “Deep learning in agriculture: A survey,”*Computers and Electronics in Agriculture*, vol. 147, pp. 70–90, 2018.

REFERENCES

[6] J. Too, L. Yujian, S. Njuki, and L. Yingchun, “A comparative study of fine-tuning deep learning models for plant disease identification,” *Computers and Electronics in Agriculture*, vol. 161, pp. 272–279, 2019.

[7] H. Durmuş, E. O. Güneş, and M. Kırcı, “Disease detection on the leaves of the tomato plants by using deep learning,” *International Conference on Agro-Geoinformatics*, pp. 1–5, 2017.

[8] R. P. Pooja and S. K. Bhatia, “IoT Based Smart Agriculture Monitoring System,” *International Journal of Engineering Research and Technology*, vol. 8, no. 6, pp. 623–626, 2019.

[9] S. R. Ramesh and D. Vydeki, “Recognition and classification of paddy leaf diseases using deep neural networks,” *Journal of Intelligent and Fuzzy Systems*, vol. 36, no. 6, pp. 5985–5995, 2019.

[10] M. Barbedo, “Impact of dataset size and variety on the effectiveness of deep learning and transfer learning for plant disease classification,” *Computers and Electronics in Agriculture*, vol. 153, pp. 46–53, 2018.

THANK YOU