the Non-Adiabatic Williams–Otto Process

Based on the traditional Williams–Otto process and with reference to typical industrial models such as the non-adiabatic Continuous Stirred Tank Reactor (CSTR) and petroleum fractionation models, this section constructs a new non-adiabatic Williams–Otto process model. The W - O process consists of a non-adiabatic CSTR, a decanter, a distillation column, and a splitter. It provides a numerical abstraction of the reaction, storage, and separation systems commonly encountered in chemical engineering, offering a reliable testbed for validating the effectiveness of optimization and control methods for complex industrial processes. A detailed description of the process is given below.

Reactants A and B enter the non-adiabatic CSTR and undergo the following reactions:

$$\begin{cases} A + B \rightarrow C \\ C + B \rightarrow P + E \\ P + C \rightarrow G \end{cases} \tag{1.1}$$

The effluent from the non-adiabatic CSTR first enters a decanter, where product G is completely removed, and the remaining substances continue to the distillation column. The gaseous overhead stream exits the column at a set flow rate, while the liquid bottoms stream is split into two parts: one is sent downstream as product, and the other is refluxed to the CSTR via a splitter. During reflux, 10% of product E is converted to P. The system schematic is shown in Fig. 1-1.

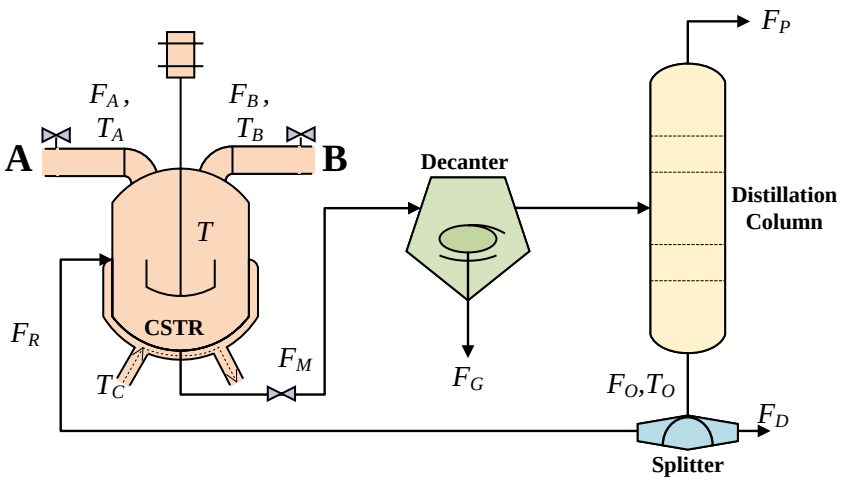

Fig. 1-1 Schematic of the non-adiabatic Williams–Otto system

The mathematical models of the non-adiabatic CSTR and the distillation column

are as follows:

$$
\begin{cases}
\dot{m}_A = F_A + ((1-\eta)F_M - F_M)\,\frac{m_A}{m} - r_1(T, m_A, m_B, V) \\
\dot{m}_B = F_B + ((1-\eta)F_M - F_M)\,\frac{m_B}{m} - r_1 - r_2 \\
\dot{m}_C = ((1-\eta)F_M - F_M)\,\frac{m_C}{m} + 2r_1 - 2r_2 - r_3 \\
\dot{m}_E = ((1-\eta)F_M - F_M)\,\frac{m_E}{m} + 2r_2 \\
\dot{m}_P = 0.1(1-\eta)F_M\frac{m_E}{m} + (1-\eta)\left(F_M\frac{m_P}{m} - F_P^{\mathrm{DC}}\right) \\
\qquad -F_M\frac{m_P}{m} + r_2 - 0.5r_3 \\
\dot{m}_G = -F_M\frac{m_G}{m} + 1.5r_3 \\
T = \frac{1}{\rho C_P V}\Bigg[F_A C_P(T_A - T) + F_B C_P(T_B - T) \\
\qquad +(1-\eta)\left(\frac{F_M(m-m_G)}{m} - F_P^{\mathrm{DC}}\right)C_P(T_O - T) \\
\qquad -\sum_{i=1}^{3}\frac{\Delta H_i r_i}{M_i} - UA(T - T_C)\Bigg]
\end{cases}
\tag{1.2}
$$

s.t.

$$
\begin{cases}
r_1 = \frac{a_1}{\rho}\exp\left(-\frac{b_1}{T}\right)\frac{m_A m_B}{V} \\
r_2 = \frac{a_2}{\rho}\exp\left(-\frac{b_2}{T}\right)\frac{m_B m_C}{V} \\
r_3 = \frac{a_3}{\rho}\exp\left(-\frac{b_3}{T}\right)\frac{m_C m_P}{V} \\
m = m_A + m_B + m_C + m_P + m_E + m_G \\
V = \frac{m_A}{\rho_A^e} + \frac{m_B}{\rho_{\mathrm{B}}^e} + \frac{m_C}{\rho_C^e} + \frac{m_P}{\rho_P^e} + \frac{m_E}{\rho_E^e} + \frac{m_G}{\rho_G^e} \\
F_M = F_A + F_B + F_C + F_E + F_P^{\mathrm{CSTR}} + F_G \\
F_E = F_M \cdot \frac{m_E}{m} \\
F_P^{\mathrm{CSTR}} = F_M \cdot \frac{m_P}{m}
\end{cases}
$$

where $m_A \sim m_G$ denote the masses of the respective reactants and products, $F_A \sim F_G$ represent their corresponding mass flow rates, F_M is the total outlet mass flow rate of the non-adiabatic CSTR, V is the volume of the mixture in the reactor, T_A and T_B are the inlet temperatures of reactants A and B, and T and T_C denote the reaction temperature in the reactor and the cooling jacket temperature, respectively.

$$
\begin{cases}
F_P^{DC}(s) = \mathrm{sat}\left(\frac{4.05e^{-17s}}{50s+1}u_1(s) + \frac{5.88e^{-17s}}{50s+1}u_2(s), K_s(s)\right) \\
T_O(s) = \frac{7.20}{19s+1}u_2(s) + \frac{4.38e^{-10s}}{33s+1}u_1(s)
\end{cases}
$$

s.t.

$$
K_s(s) = \frac{0.1}{s} + \frac{F_P^{CSTR}(s) - F_P^{DC}(s)}{s},
\tag{1.3}
$$

$$
\mathrm{sat}(x, C) = \begin{cases} x, & |x| \le C, \\ C \cdot \mathrm{sign}(x), & \text{otherwise.} \end{cases}
$$

where F_P^{DC} and K_S denote the mass flow rate of the gaseous product from the distillation column and the equivalent mass flow rate of the stored product P, respectively; F_O, F_D, and F_R represent the liquid product flow rate from the distillation column,

the bottom separation product flow rate, and the bottom reflux flow rate, respectively, with η being the reflux ratio; T_O is the temperature of the liquid product from the distillation column; u_1 and u_2 denote the extraction rate and the heat load, respectively. $[F_E, F_P^{CSTR}, F_P^{DC}]$ are the controlled variables, and $[F_A, F_B, F_M, \eta, T_C, u_1, u_2]$ are the manipulated variables. T_O is subject only to output constraints and requires no control, while $T_A, T_B \sim \mathcal{N}\left(520, 2\right)$ are system disturbance variables. The types, units, and physical meanings of the system variables are detailed in Table 1-1; the ranges and constraint conditions of selected variables are provided in Table 1-2; and the units, physical meanings, and values of the system parameters are listed in Table 1-3.

Based on the above model, the LOT-based DRTO return-on-investment optimization objective function is formulated as follows:

$$
\begin{aligned}
&\max \sum_{t=n^* T_{SP}}^{T_D} I_R - \lambda Q \Delta V(t) \\
&\text{s.t.} \\
&I_R = \frac{P_E F_E + P_P F_P^{DC} - P_A F_A - P_B F_B - P_{TC}(T - T_C) - P_{TR} T_R - P_F V_\rho}{P_I V_\rho} \times 100\%, \\
&\text{State}(t) = \begin{bmatrix} F_E(t) & F_P^{CSTR}(t) & T(t) & F_P^{DC}(t) \end{bmatrix}^T, \\
&\text{State}_{\text{min}} \leq \text{State}(t) \leq \text{State}_{\text{max}}, \\
&\Delta\text{State}_{\text{min}} \leq \Delta\text{State}(t) \leq \Delta\text{State}_{\text{max}}.
\end{aligned}
\tag{1.4}
$$

where I_R is the return on investment, State(t) is the state vector composed of the individual state variables, $\text{State}_{\text{min}}$ and $\text{State}_{\text{max}}$ are the minimum and maximum values of the state vector, and $\Delta\text{State}_{\text{min}}$ and $\Delta\text{State}_{\text{max}}$ are the minimum and maximum values of the state vector increments, respectively. The values of the economic constants are given in Table 1-4.

Tab. 1-1 Variables of the non-adiabatic Williams–Otto system

Type	Variable	Unit	Physical meaning
Manipulated variables	F_A	klb/h	Feed flow rate of A
	F_B	klb/h	Feed flow rate of B
	F_M	klb/h	Total outlet flow rate of CSTR
	η	–	Reflux ratio
	T_C	°R	Cooling temperature
	u_1	–	Extraction rate
	u_2	–	Heat load
Disturbance variables	T_A	°R	Inlet temperature of A
	T_B	°R	Inlet temperature of B
CSTR state variables	m_A	klb	Mass of A
	m_B	klb	Mass of B
	m_C	klb	Mass of C
	m_P	klb	Mass of P
	m_E	klb	Mass of E
	m_G	klb	Mass of G
	T	°R	Reaction temperature
Distillation column state variable	T_O	°R	Bottom outlet temperature of the distillation column
Controlled variables	F_E	klb/h	Flow rate of E
	F_P^{CSTR}	klb/h	Flow rate of P in CSTR
	F_P^{DC}	klb/h	Flow rate of P at the top of the distillation column

Tab. 1-2 Variable constraints of the non-adiabatic Williams–Otto system

	F_E	F_p^{CSTR}	T	F_p^{DC}	T_D	F_A	F_B	F_M	η	T_c	u_1	u_2
Maximum	2	0.5	620	0.5	600	150	50	2	1	650	600	600
Minimum	1	0.3	580	0.3	560	0	0	200	0.5	500	-600	-600
Max increment	0.1	0.05	5	0.05	10	5	5	10	0.2	-20	10	10
Min increment	-0.1	-0.05	-5	-0.05	-10	-5	-5	-10	-0.2	20	-10	-10

Tab. 1-3 Parameters of the non-adiabatic Williams–Otto system

Parameter	Unit	Physical meaning	Value
a_1, a_2, a_3	1/h	Pre-exponential factors	5.9755×10^9, 2.5962×10^{12}, 9.6283×10^{15}
b_1, b_2, b_3	°R	Activation energy parameters	12000, 15000, 20000
$\rho_A^e, \ldots, \rho_G^e$	lb/ft^3	Equivalent pure component densities	50
ρ	lb/ft^3	Mixture density	50
C_p	kcal/(klb · °R)	Specific heat capacity of mixture	150
U	kcal/(h · ft^2 · °R)	Overall heat transfer coefficient	20
$\Delta H_1, \Delta H_2, \Delta H_3$	kcal/kmol	Reaction enthalpies	-8000, -10000, -12000
M_1, M_2, M_3	klb/kmol	Molar masses	0.06, 0.1, 0.15
r_1, r_2, r_3	klb/h	Reaction rates	N/A

Tab. 1-4 Economic optimization parameters

Parameter	Unit	Physical meaning	Value
P_E	\$/klb	Unit price of product E	150
P_P	\$/klb	Unit price of product P	100
P_A	\$/klb	Cost of raw material A	8
P_B	\$/klb	Cost of raw material B	5
P_G	\$/klb	Treatment cost of byproduct G	3
P_{TC}	\$/(°R/h)	Cooling cost coefficient	1
P_{TR}	\$/(°R/h)	Reflux temperature cost	0.3
P_F	\$/(ft^3/h)	Volume cost coefficient	0.1