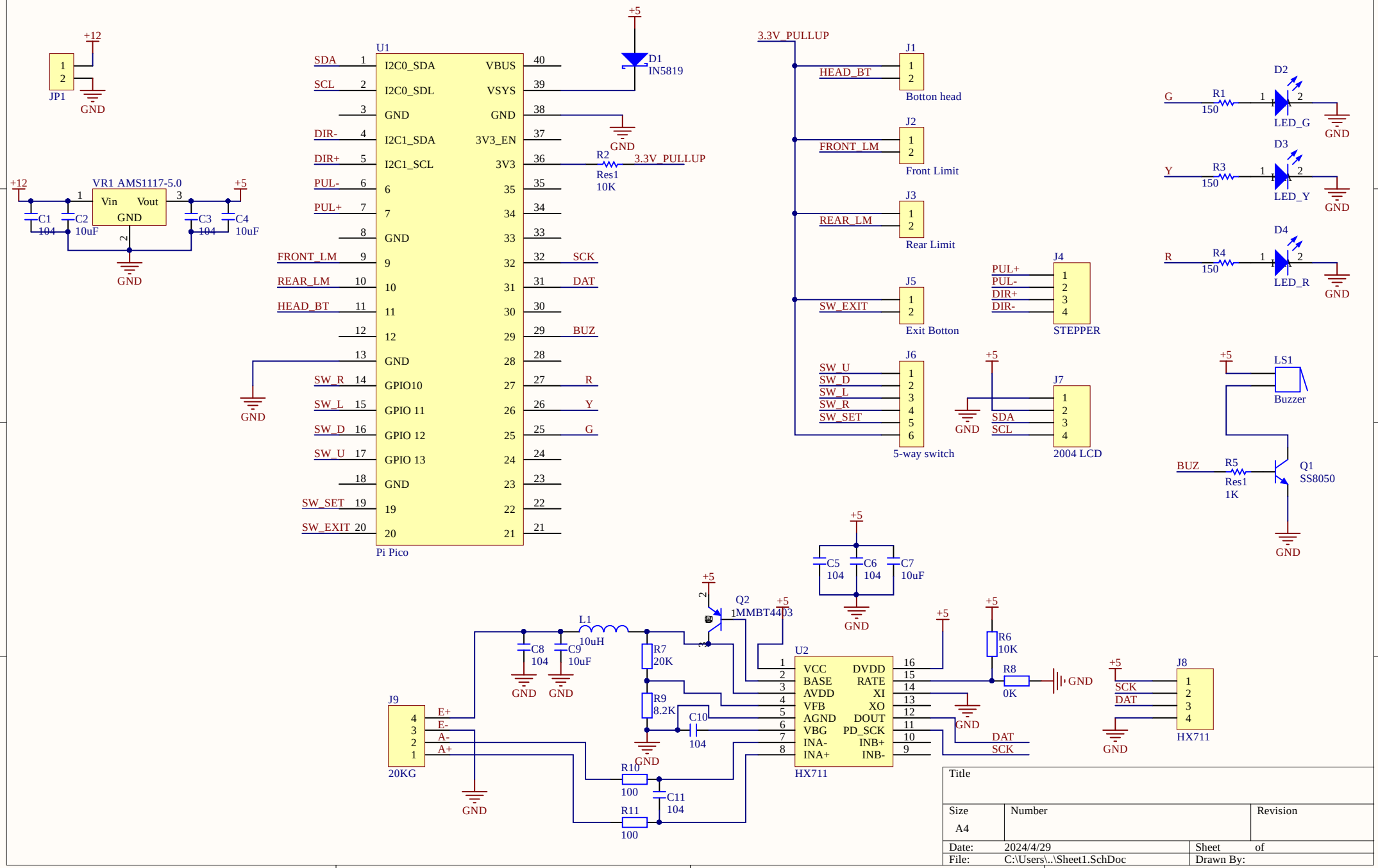
JP1
+12
GND
VR1 AMS1117-5.0
Vin
Vout
GND
C1 104
C2 10uF
C3 104
C4 10uF
+5
U1
Pi Pico
I2C0_SDA
I2C0_SDL
I2C1_SDA
I2C1_SCL
VBUS
VSYS
3V3_EN
3V3
GPIO10
GPIO 11
GPIO 12
GPIO 13
SDA
SCL
DIR-
DIR+
PUL-
PUL+
FRONT_LM
REAR_LM
HEAD_BT
SW_R
SW_L
SW_D
SW_U
SW_SET
SW_EXIT
SCK
DAT
BUZ
R
Y
G
D1 IN5819
R2 Res1 10K
3.3V_PULLUP
J1 Botton head
J2 Front Limit
J3 Rear Limit
J5 Exit Botton
J6 5-way switch
J4 STEPPER
J7 2004 LCD
D2 LED_G
D3 LED_Y
D4 LED_R
R1 150
R3 150
R4 150
LS1 Buzzer
R5 Res1 1K
Q1 SS8050
C5 104
C6 104
C7 10uF
Q2 1MMBT4403
L1 10uH
C8 104
C9 10uF
R7 20K
R9 8.2K
C10 104
R10 100
R11 100
C11 104
J9 20KG
E+
E-
A-
A+
U2 HX711
VCC
BASE
AVDD
VFB
AGND
VBG
INA-
INA+
DVDD
RATE
XI
XO
DOUT
PD_SCK
INB+
INB-
R6 10K
R8 0K
J8 HX711
Title
Size A4
Number
Revision
Date: 2024/4/29
Sheet of
File: C:\Users\..\Sheet1.SchDoc
Drawn By: