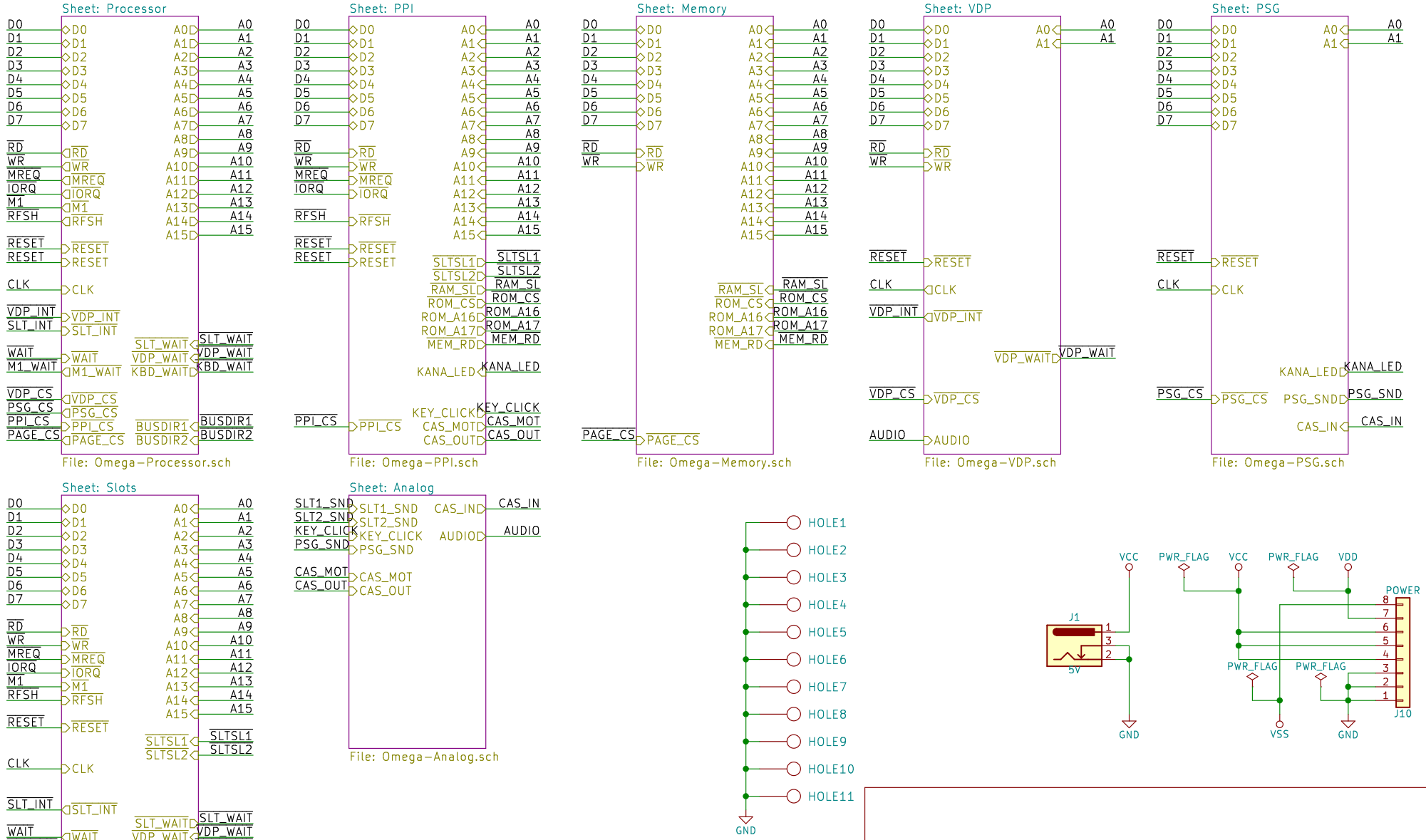

Sheet: /
File: Omega-Mainboard.sch

Title:

Size: A4	Date:	Rev:
KiCad E.D.A. kicad (5.1.0)-1		Id: 1/8

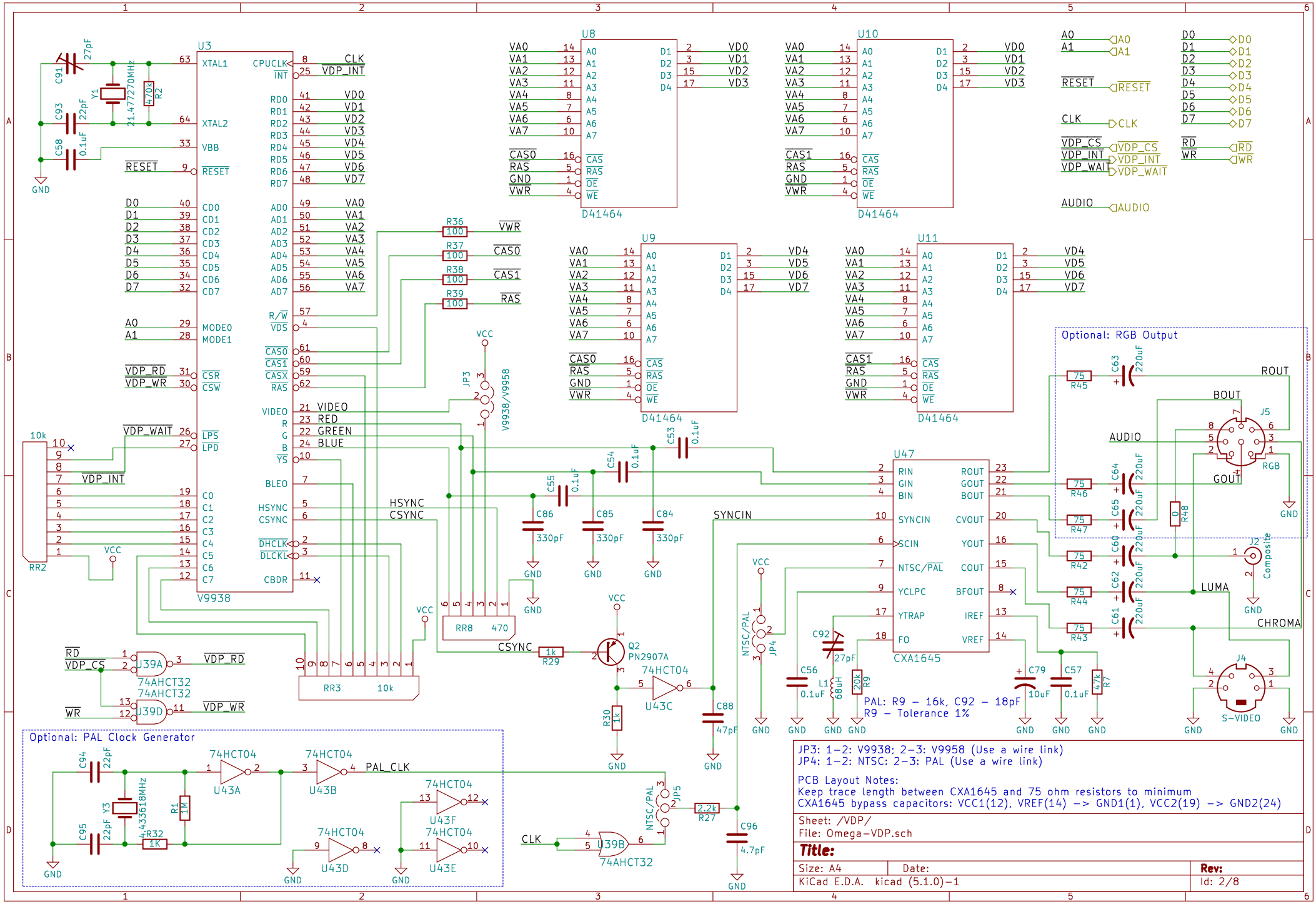
U3
V9938
U8
U10
U9
U11
D41464
U47
CXA1645
Optional: RGB Output
Optional: PAL Clock Generator
PAL: R9 – 16k, C92 – 18pF
R9 – Tolerance 1%
JP3: 1–2: V9938; 2–3: V9958 (Use a wire link)
JP4: 1–2: NTSC; 2–3: PAL (Use a wire link)
PCB Layout Notes:
Keep trace length between CXA1645 and 75 ohm resistors to minimum
CXA1645 bypass capacitors: VCC1(12), VREF(14) –> GND1(1), VCC2(19) –> GND2(24)
Sheet: /VDP/
File: Omega–VDP.sch
Title:
Size: A4
Date:
Rev:
KiCad E.D.A. kicad (5.1.0)–1
Id: 2/8

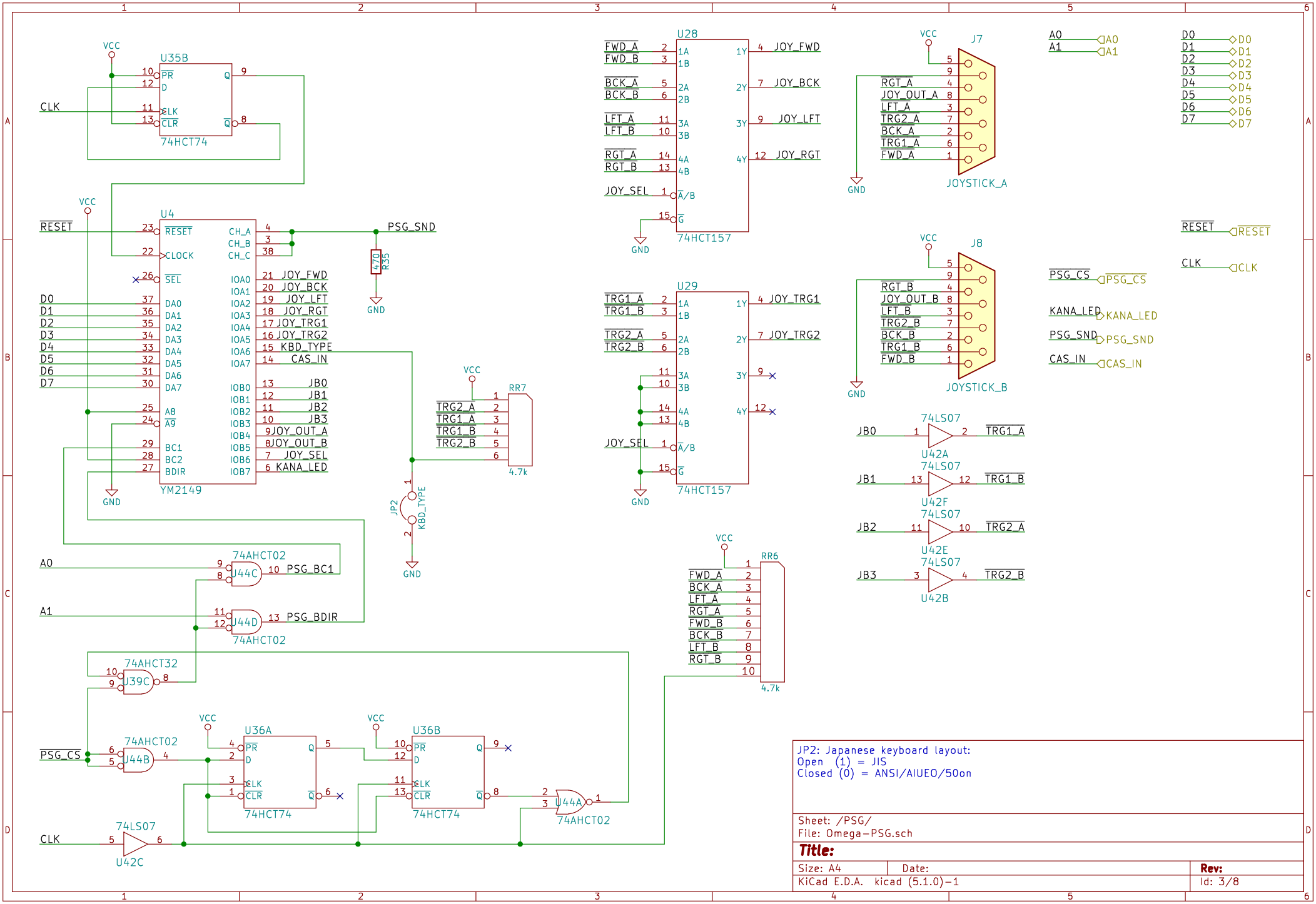

JP2: Japanese keyboard layout:
Open (1) = JIS
Closed (0) = ANSI/AIUEO/50on

Sheet: /PSG/
File: Omega-PSG.sch

Title:

Size: A4	Date:	Rev:
KiCad E.D.A. kicad (5.1.0)-1		Id: 3/8

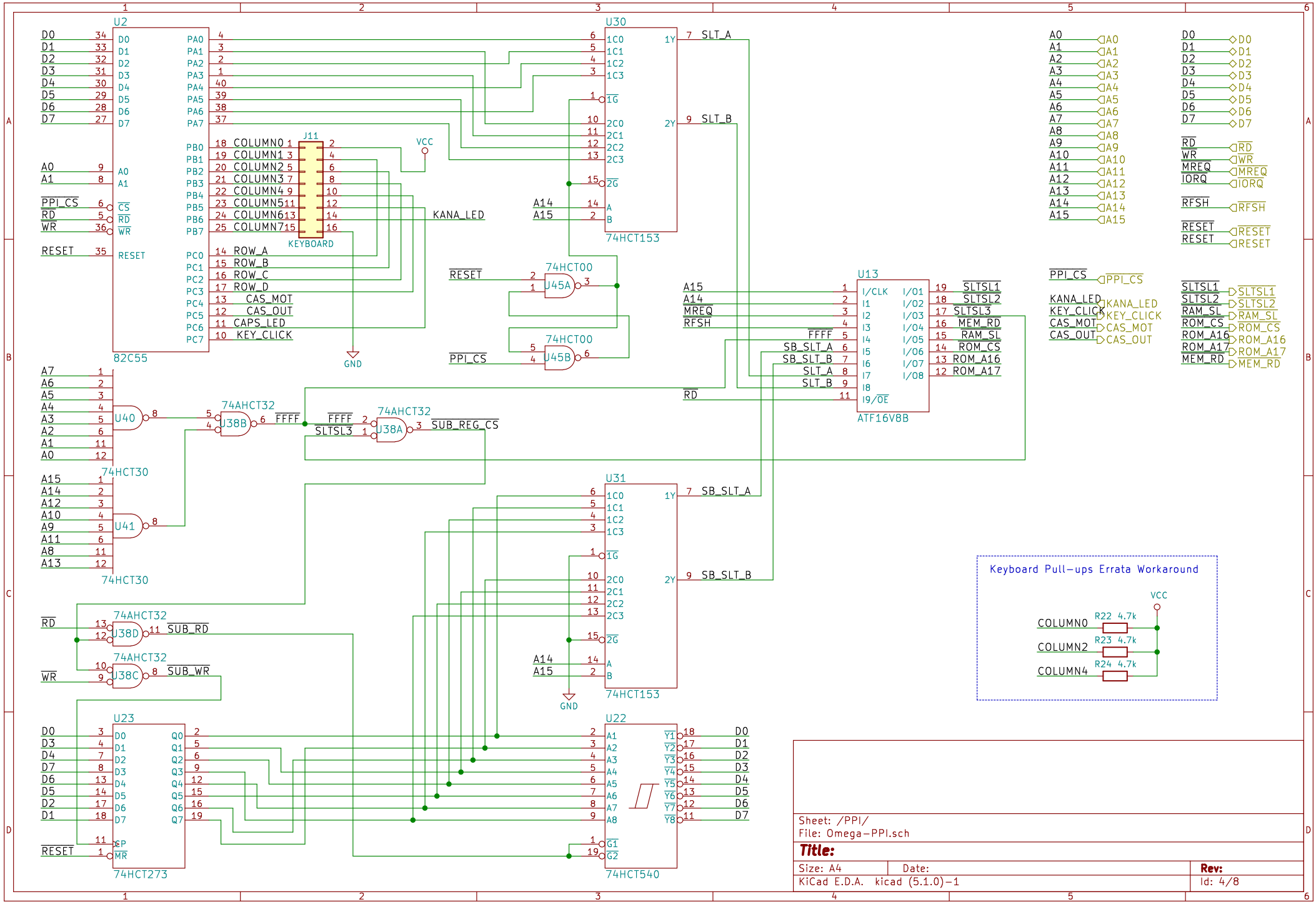
U2
82C55
PA0 PA1 PA2 PA3 PA4 PA5 PA6 PA7
PB0 PB1 PB2 PB3 PB4 PB5 PB6 PB7
PC0 PC1 PC2 PC3 PC4 PC5 PC6 PC7
D0 D1 D2 D3 D4 D5 D6 D7
A0 A1
PPI_CS RD WR RESET
COLUMN0 COLUMN1 COLUMN2 COLUMN3 COLUMN4 COLUMN5 COLUMN6 COLUMN7
ROW_A ROW_B ROW_C ROW_D
CAS_MOT CAS_OUT CAPS_LED KEY_CLICK
J11
KEYBOARD
VCC
GND
KANA_LED
U30
74HCT153
SLT_A SLT_B
A14 A15
U45A U45B
74HCT00
RESET PPI_CS
U13
ATF16V8B
A15 A14 MREQ RFSH FFFF SB_SLT_A SB_SLT_B SLT_A SLT_B RD
SLTSL1 SLTSL2 SLTSL3 MEM_RD RAM_SL ROM_CS ROM_A16 ROM_A17
U40 U41
74HCT30
U38B U38A
74AHCT32
FFFF SLTSL3 SUB_REG_CS
U31
74HCT153
SB_SLT_A SB_SLT_B
U38D U38C
SUB_RD SUB_WR
U23
74HCT273
U22
74HCT540
Keyboard Pull-ups Errata Workaround
COLUMN0 COLUMN2 COLUMN4
R22 4.7k
R23 4.7k
R24 4.7k
Sheet: /PPI/
File: Omega-PPI.sch
Title:
Size: A4
Date:
Rev:
KiCad E.D.A. kicad (5.1.0)-1
Id: 4/8

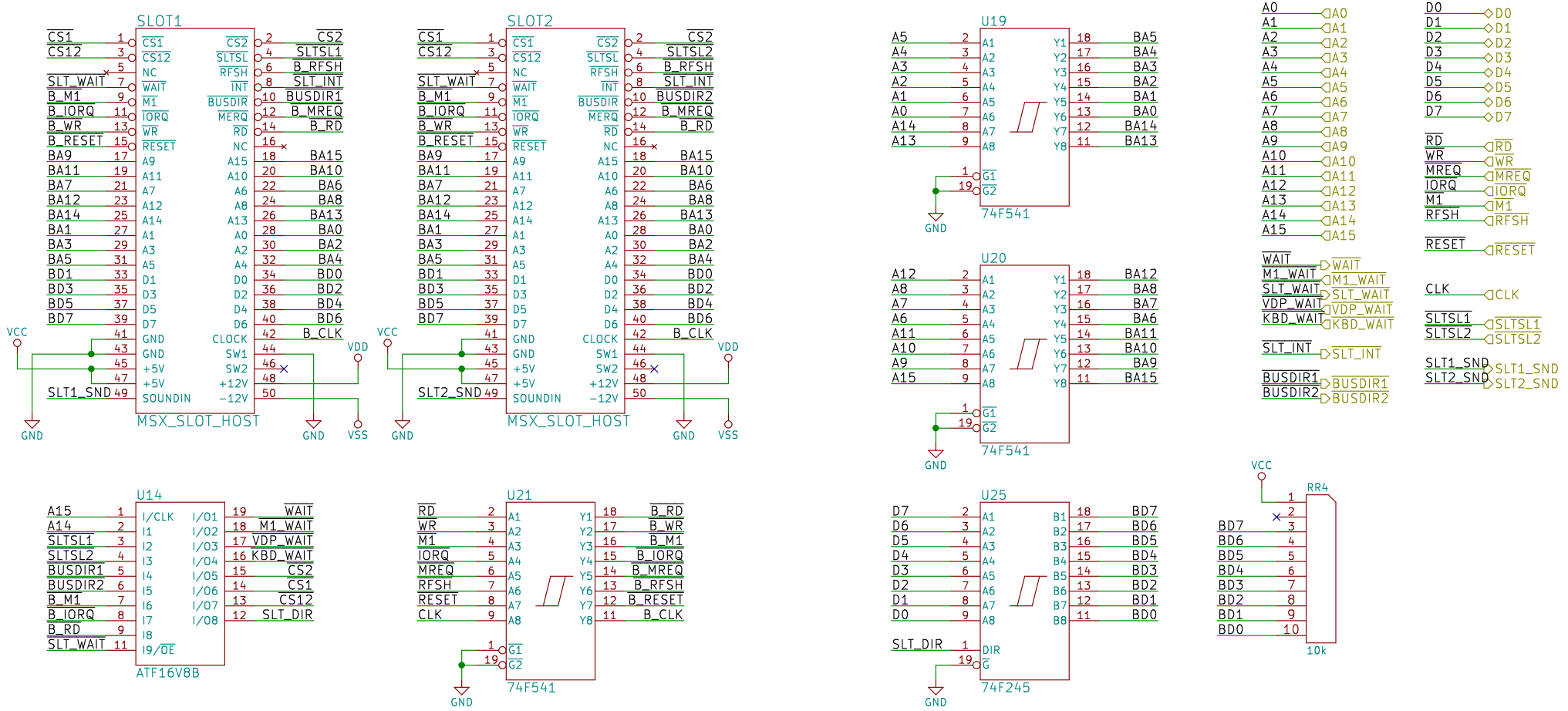

Sheet: /Slots/
File: Omega-Slots.sch

Title:

Size: A4	Date:	Rev:
KiCad E.D.A. kicad (5.1.0)-1		Id: 5/8

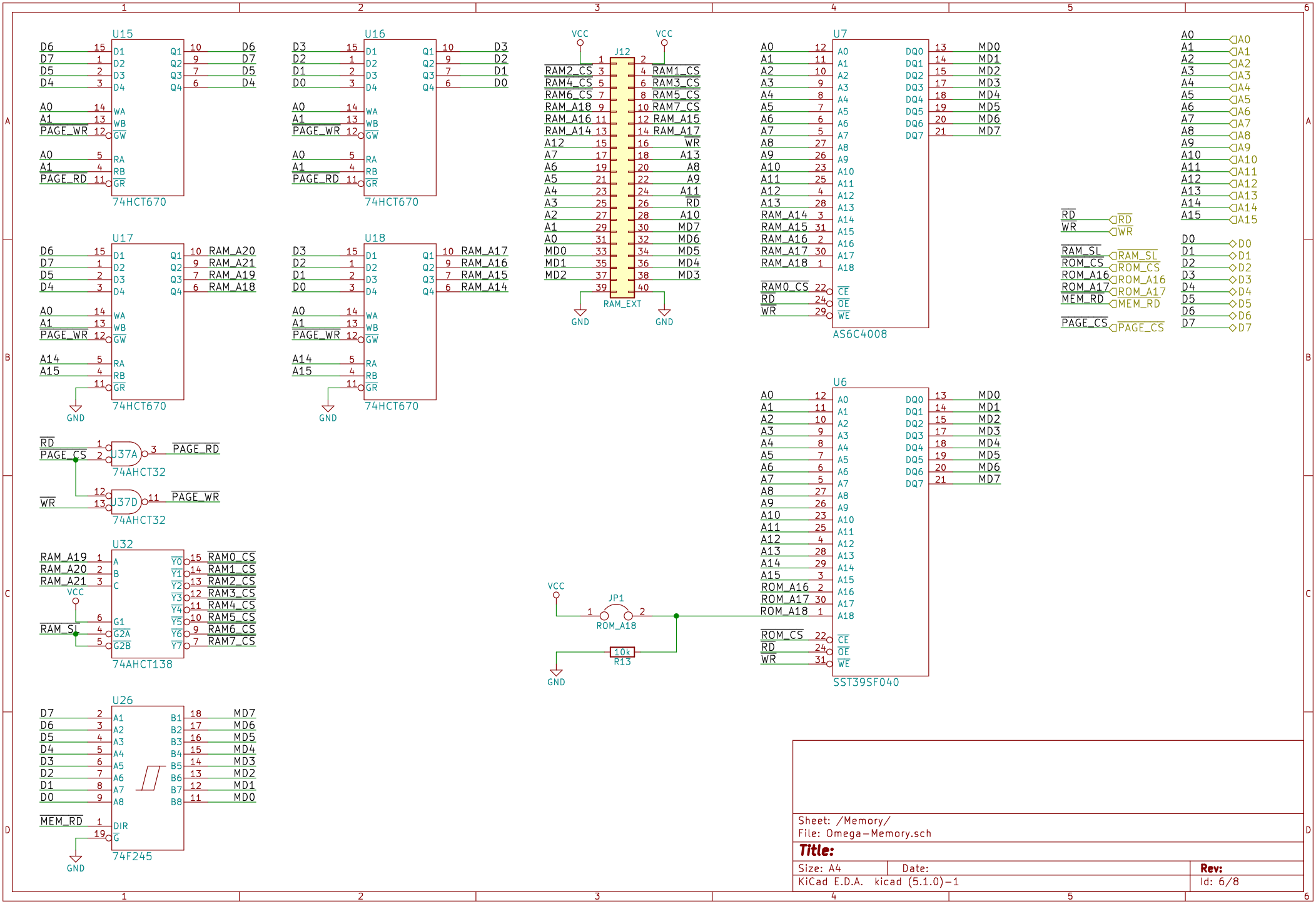

Sheet: /Memory/
File: Omega-Memory.sch

Title:

Size: A4	Date:	Rev:
KiCad E.D.A. kicad (5.1.0)-1		Id: 6/8

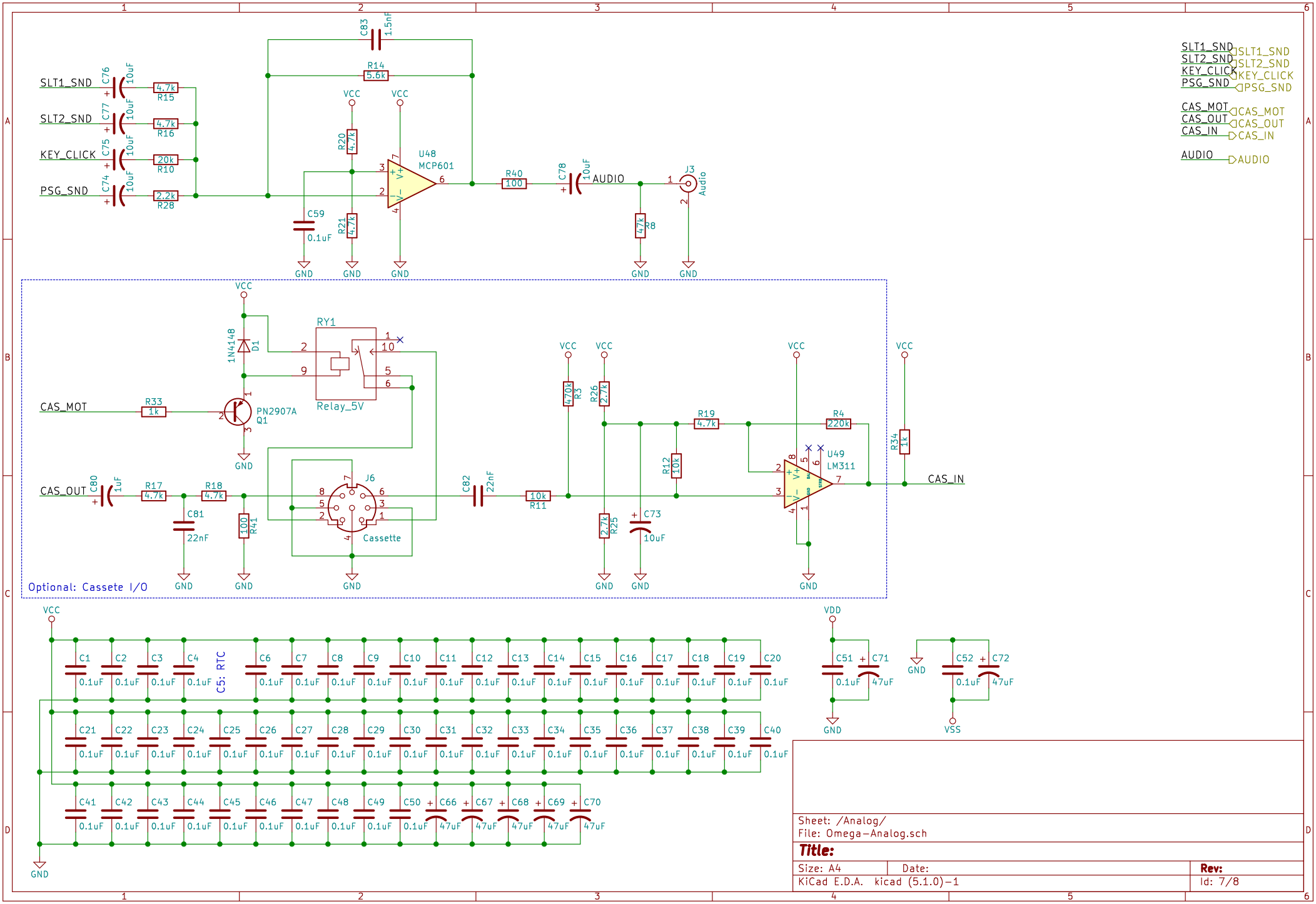

Sheet: /Analog/
File: Omega-Analog.sch

Title:

Size: A4	Date:	Rev:
KiCad E.D.A. kicad (5.1.0)-1		Id: 7/8

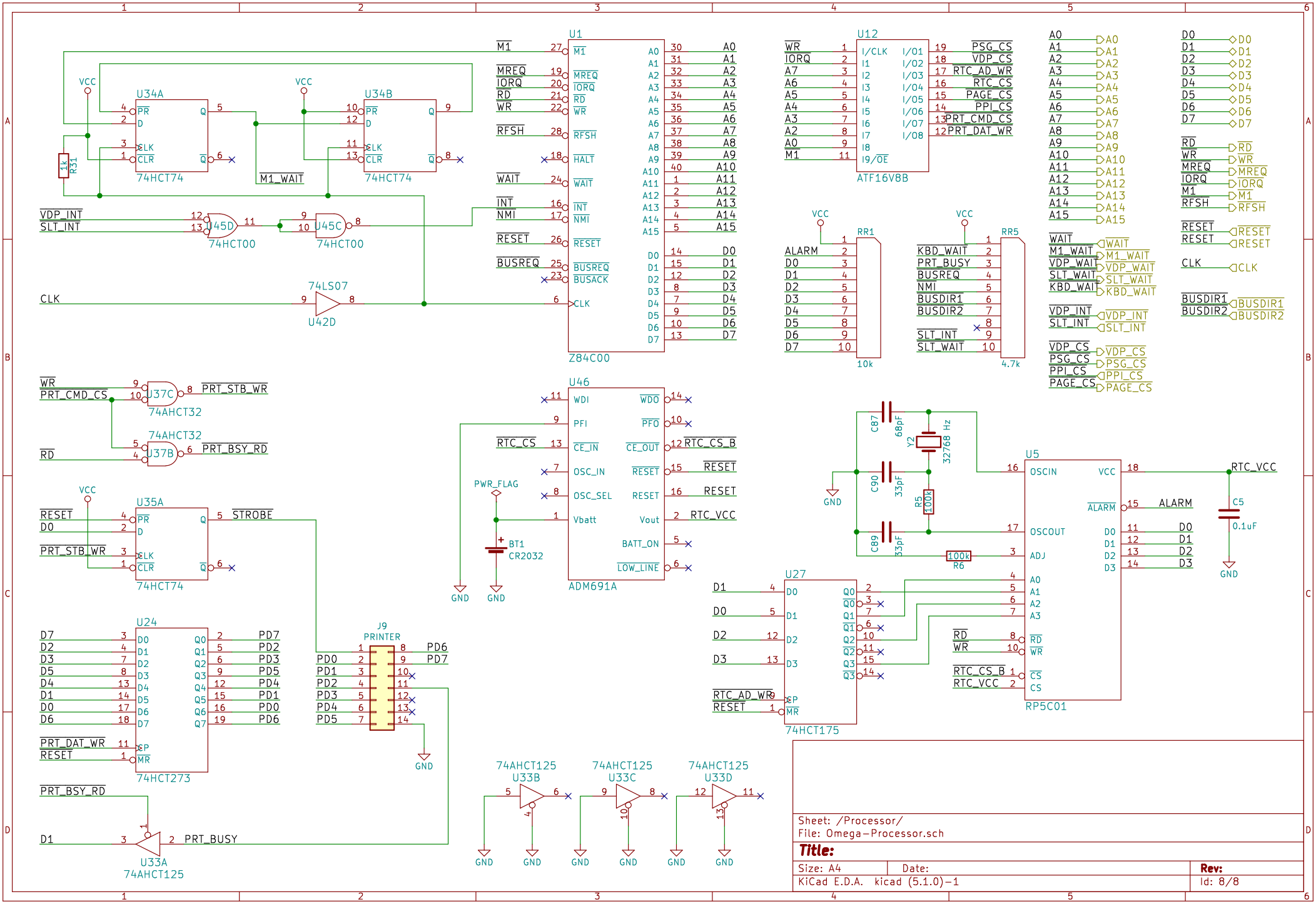

Sheet: /Processor/
File: Omega-Processor.sch

Title:

Size: A4	Date:	Rev:
KiCad E.D.A. kicad (5.1.0)-1		Id: 8/8