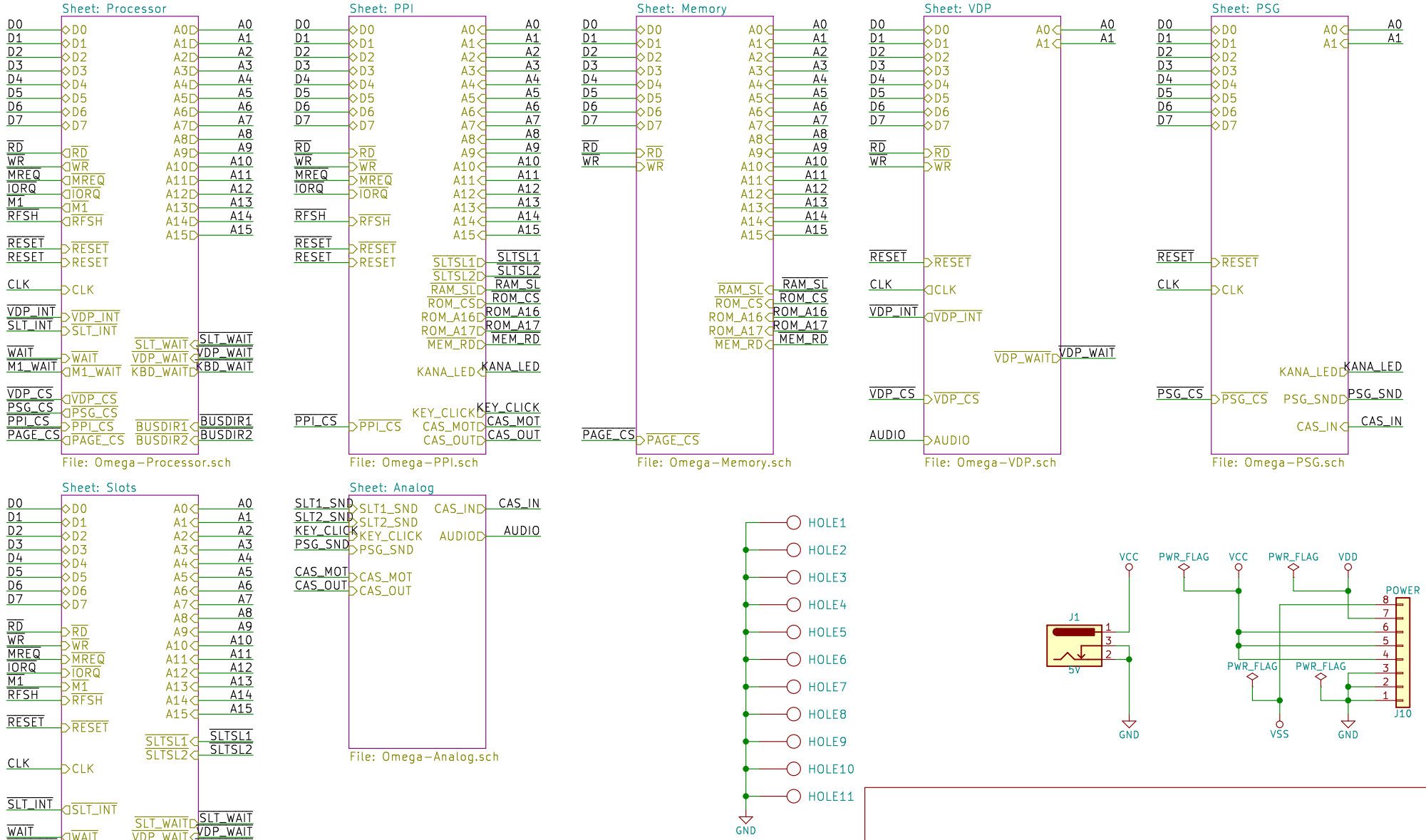

Sheet: /
File: Omega-Mainboard.sch

Title:

Size: A4	Date:	Rev:
KiCad E.D.A. kicad (5.1.0)-1		Id: 1/8

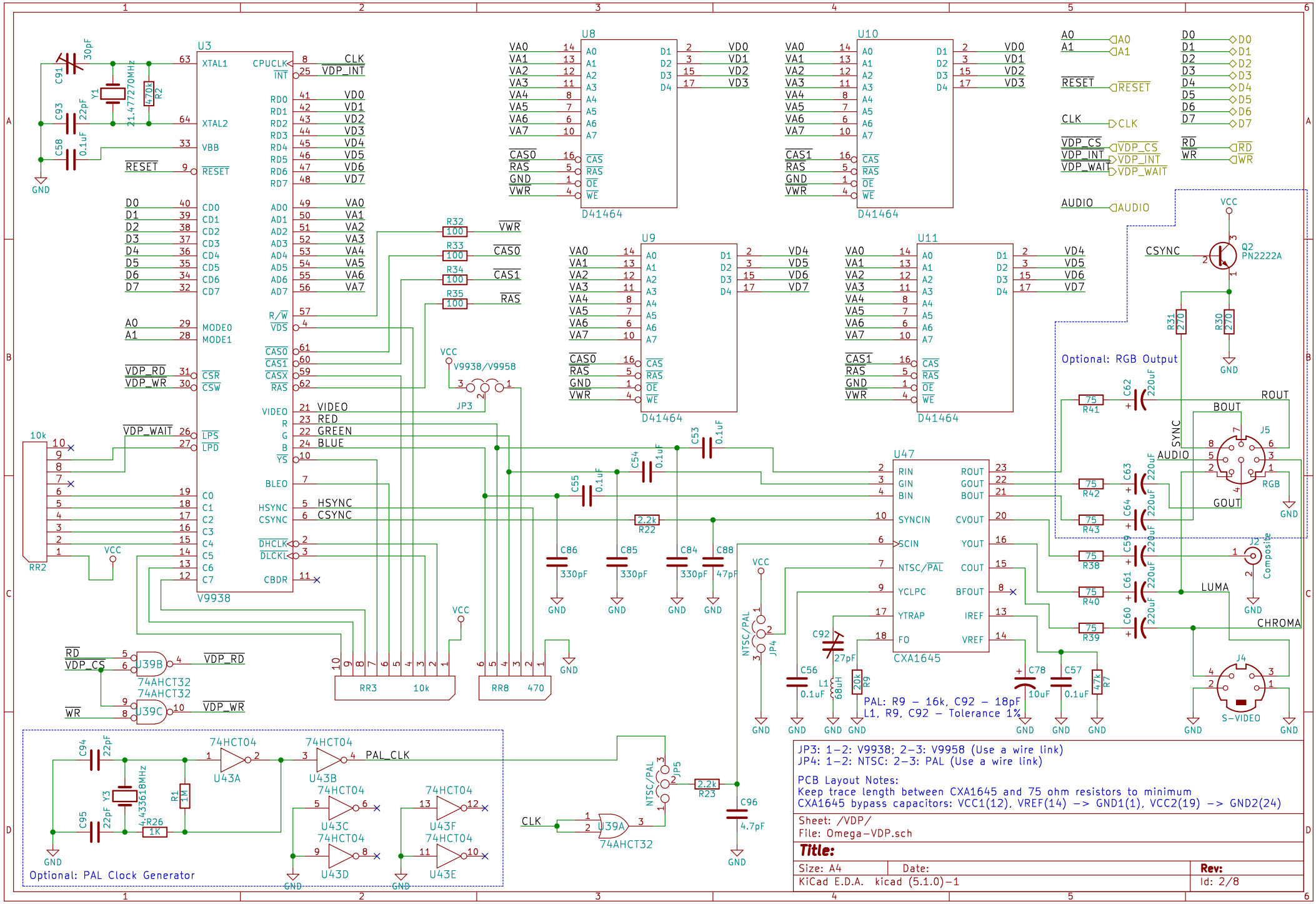
U3
V9938
U8
U9
U10
U11
D41464
U47
CXA1645
Q2
PN2222A
Y1
21.477270MHz
Y3
4.433618MHz
RR2
RR3
RR8
J5
RGB
J2
Composite
J4
S-VIDEO
JP3
JP4
JP5
Optional: RGB Output
Optional: PAL Clock Generator
PAL: R9 – 16k, C92 – 18pF
L1, R9, C92 – Tolerance 1%
JP3: 1–2: V9938; 2–3: V9958 (Use a wire link)
JP4: 1–2: NTSC; 2–3: PAL (Use a wire link)
PCB Layout Notes:
Keep trace length between CXA1645 and 75 ohm resistors to minimum
CXA1645 bypass capacitors: VCC1(12), VREF(14) –> GND1(1), VCC2(19) –> GND2(24)
Sheet: /VDP/
File: Omega–VDP.sch
Title:
Size: A4
Date:
Rev:
KiCad E.D.A. kicad (5.1.0)–1
Id: 2/8

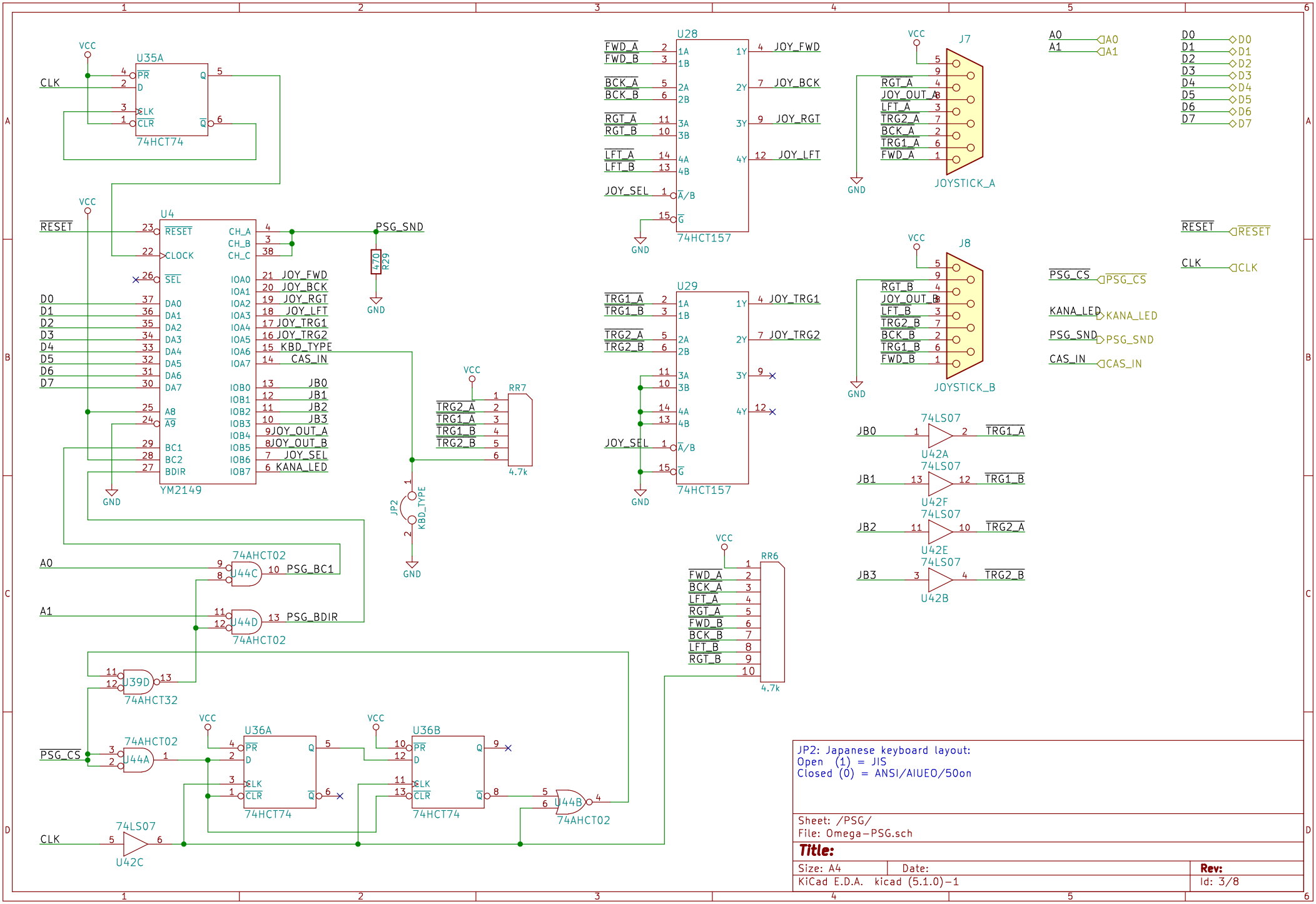

JP2: Japanese keyboard layout:
Open (1) = JIS
Closed (0) = ANSI/AIUEO/50on

Sheet: /PSG/
File: Omega-PSG.sch

Title:

Size: A4	Date:	Rev:
KiCad E.D.A. kicad (5.1.0)-1		Id: 3/8

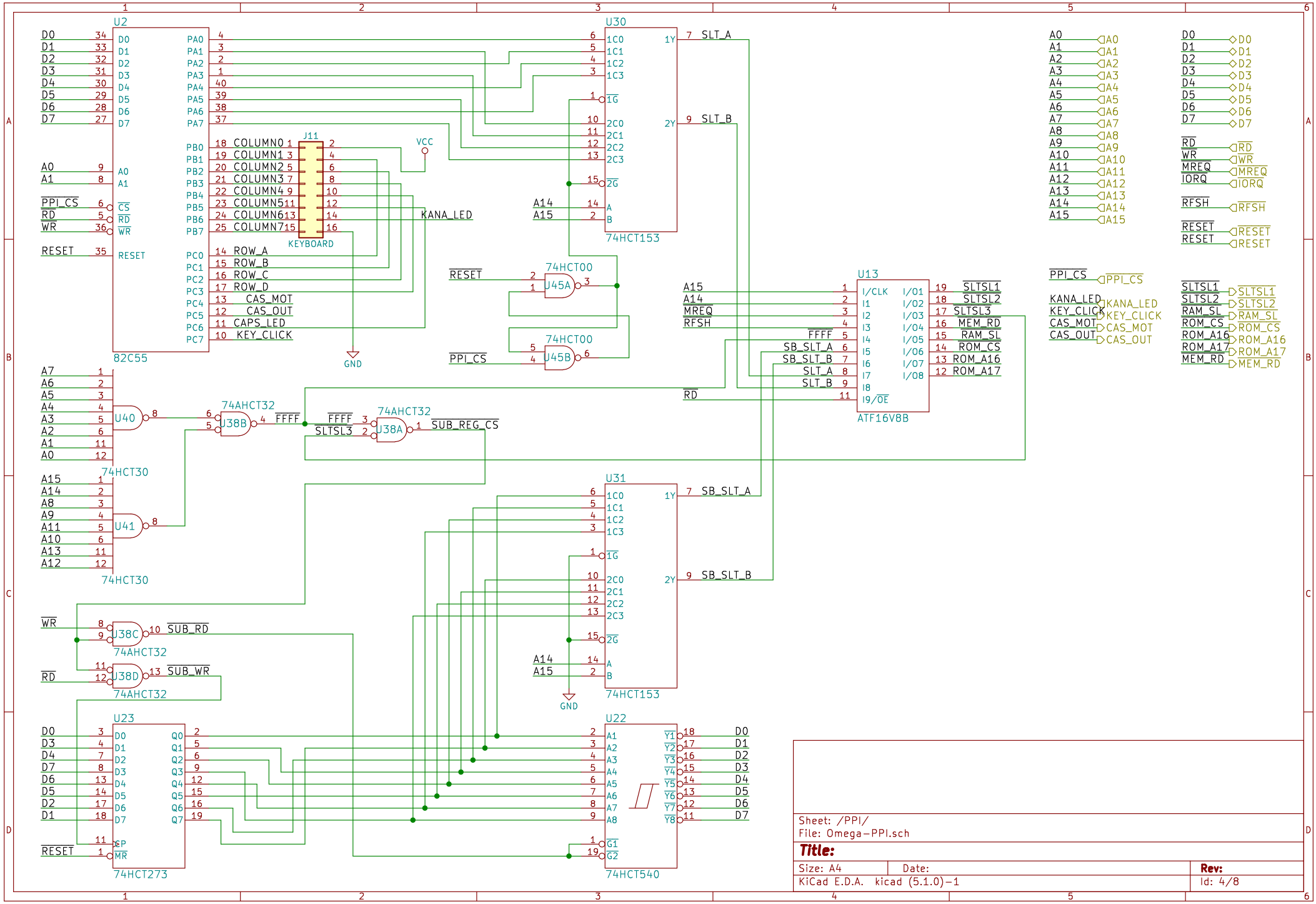
U2
82C55
D0 D1 D2 D3 D4 D5 D6 D7
A0 A1
PPI_CS RD WR
RESET
PA0 PA1 PA2 PA3 PA4 PA5 PA6 PA7
PB0 PB1 PB2 PB3 PB4 PB5 PB6 PB7
PC0 PC1 PC2 PC3 PC4 PC5 PC6 PC7
COLUMN0 COLUMN1 COLUMN2 COLUMN3 COLUMN4 COLUMN5 COLUMN6 COLUMN7
ROW_A ROW_B ROW_C ROW_D
CAS_MOT CAS_OUT CAPS_LED KEY_CLICK
J11
KEYBOARD
VCC
GND
KANA_LED
U30
74HCT153
SLT_A SLT_B
U45A U45B
74HCT00
U13
ATF16V8B
SLTSL1 SLTSL2 SLTSL3 MEM_RD RAM_SL ROM_CS ROM_A16 ROM_A17
FFFF SB_SLT_A SB_SLT_B SLT_A SLT_B
MREQ RFSH
U40 U41
74HCT30
U38B U38A U38C U38D
74AHCT32
SUB_REG_CS SUB_RD SUB_WR
U31
74HCT153
U23
74HCT273
U22
74HCT540
Sheet: /PPI/
File: Omega-PPI.sch
Title:
Size: A4
Date:
Rev:
KiCad E.D.A. kicad (5.1.0)-1
Id: 4/8

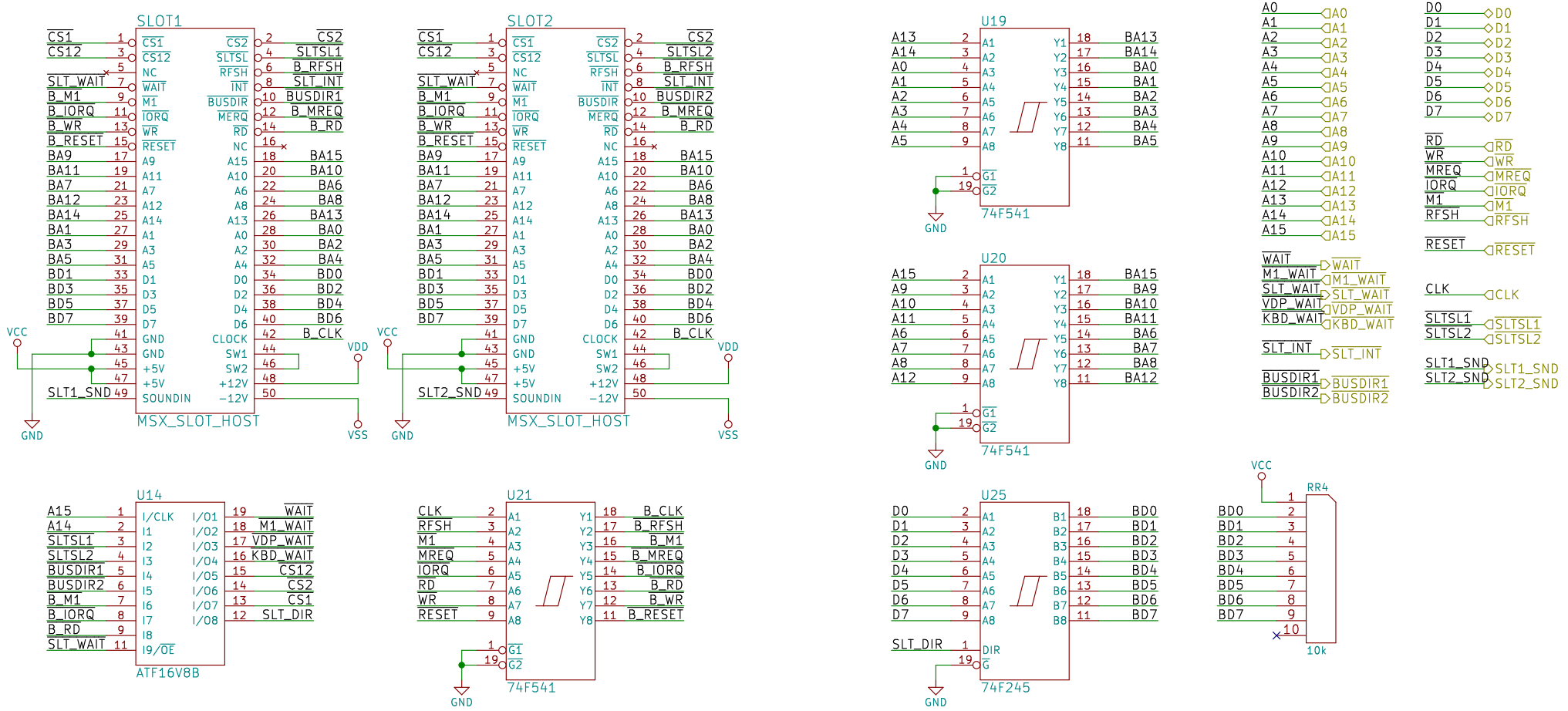

Sheet: /Slots/
File: Omega-Slots.sch

Title:

Size: A4	Date:	Rev:
KiCad E.D.A. kicad (5.1.0)-1		Id: 5/8

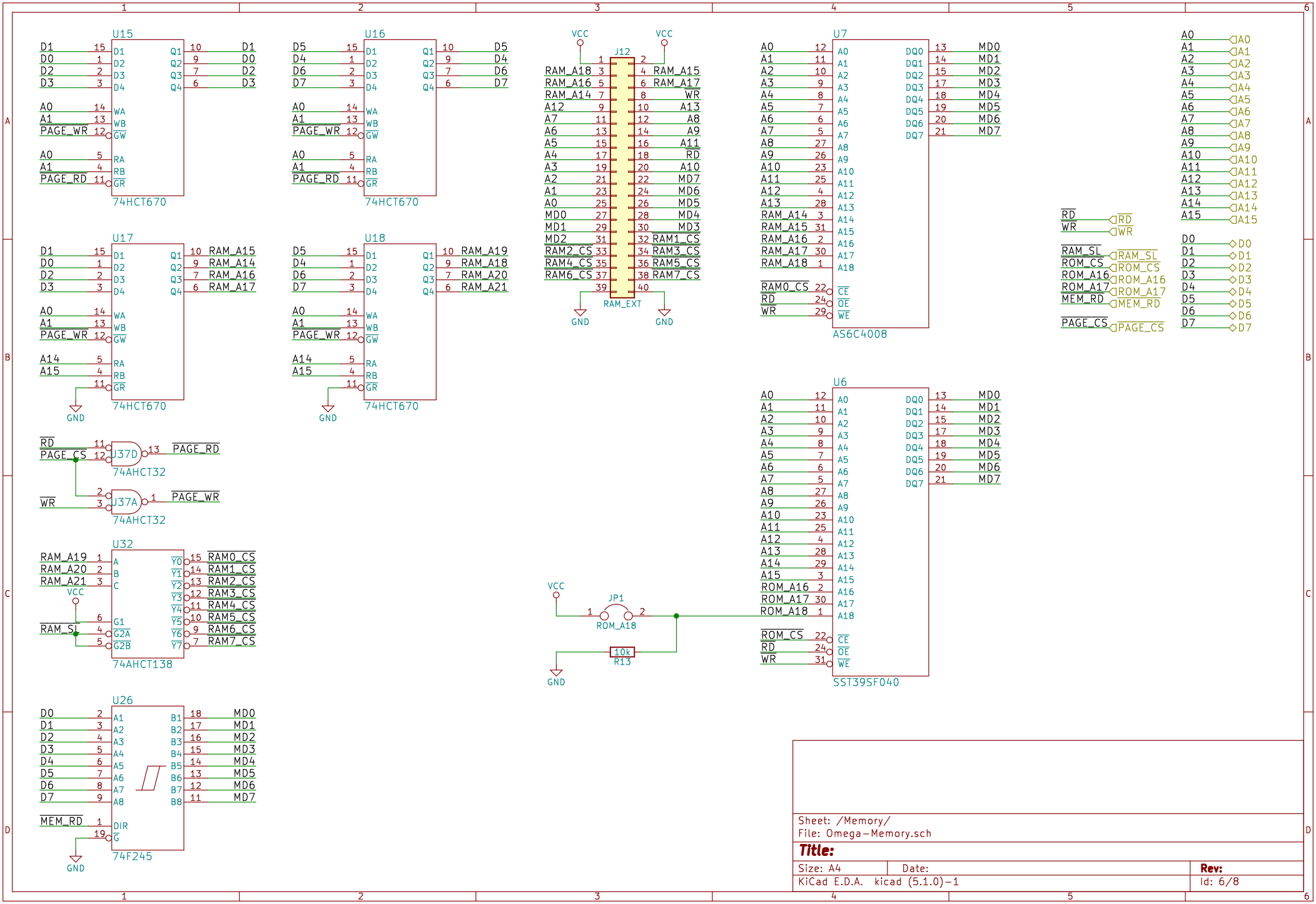

Sheet: /Memory/
File: Omega-Memory.sch

Title:

Size: A4	Date:	Rev:
KiCad E.D.A. kicad (5.1.0)-1		Id: 6/8

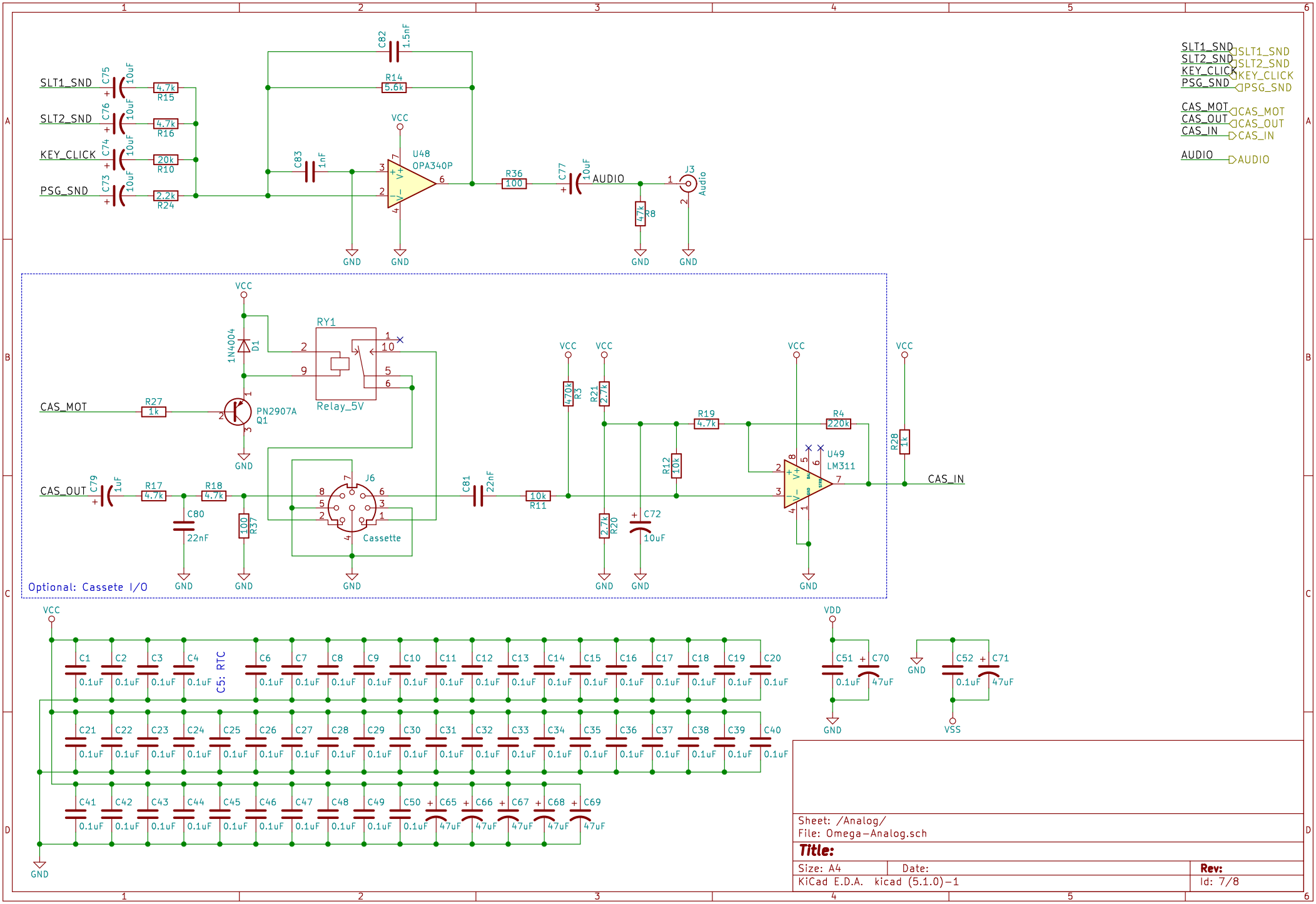
SLT1_SND
SLT2_SND
KEY_CLICK
PSG_SND
C75 10uF
C76 10uF
C74 10uF
C73 10uF
R15 4.7k
R16 4.7k
R10 20k
R24 2.2k
C82 1.5nF
R14 5.6k
C83 1nF
VCC
U48
OPA340P
R36 100
C77 10uF
AUDIO
J3
Audio
R8 47k
GND
SLT1_SND
SLT2_SND
KEY_CLICK
PSG_SND
CAS_MOT
CAS_OUT
CAS_IN
AUDIO
RY1
Relay_5V
1N4004
D1
PN2907A
Q1
R27 1k
CAS_MOT
CAS_OUT
C79 1uF
R17 4.7k
R18 4.7k
C80 22nF
R37 100
J6
Cassette
C81 22nF
R11 10k
R3 470k
R21 2.7k
R20 2.7k
C72 10uF
R12 10k
R19 4.7k
R4 220k
U49
LM311
R28 1k
CAS_IN
Optional: Cassete I/O
VDD
C1 C2 C3 C4 C5: RTC C6 C7 C8 C9 C10 C11 C12 C13 C14 C15 C16 C17 C18 C19 C20
C21 C22 C23 C24 C25 C26 C27 C28 C29 C30 C31 C32 C33 C34 C35 C36 C37 C38 C39 C40
C41 C42 C43 C44 C45 C46 C47 C48 C49 C50 C65 C66 C67 C68 C69
0.1uF
47uF
C51 C70
C52 C71
VSS
Sheet: /Analog/
File: Omega-Analog.sch
Title:
Size: A4
Date:
Rev:
KiCad E.D.A. kicad (5.1.0)-1
Id: 7/8

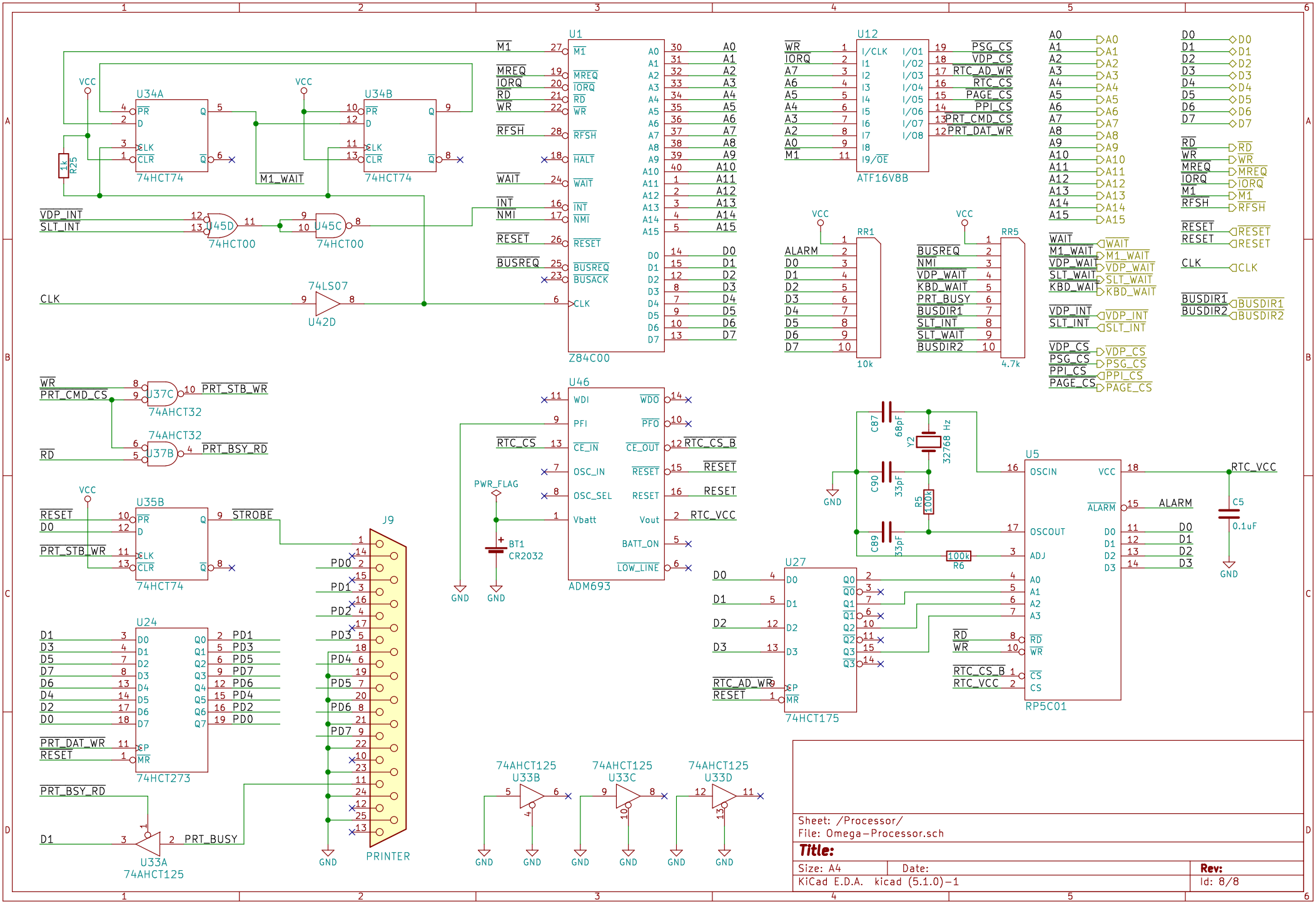
U1
Z84C00
U12
ATF16V8B
U34A
74HCT74
U34B
74HCT74
U45D
74HCT00
U45C
74HCT00
74LS07
U42D
RR1
10k
RR5
4.7k
U37C
74AHCT32
U37B
74AHCT32
U46
ADM693
U35B
74HCT74
U24
74HCT273
J9
PRINTER
U33A
74AHCT125
U33B
74AHCT125
U33C
74AHCT125
U33D
74AHCT125
U27
74HCT175
U5
RP5C01
Y2
32768 Hz
BT1
CR2032
PWR_FLAG
GND
VCC
RTC_VCC
ALARM
Sheet: /Processor/
File: Omega-Processor.sch
Title:
Size: A4
Date:
Rev:
KiCad E.D.A. kicad (5.1.0)-1
Id: 8/8