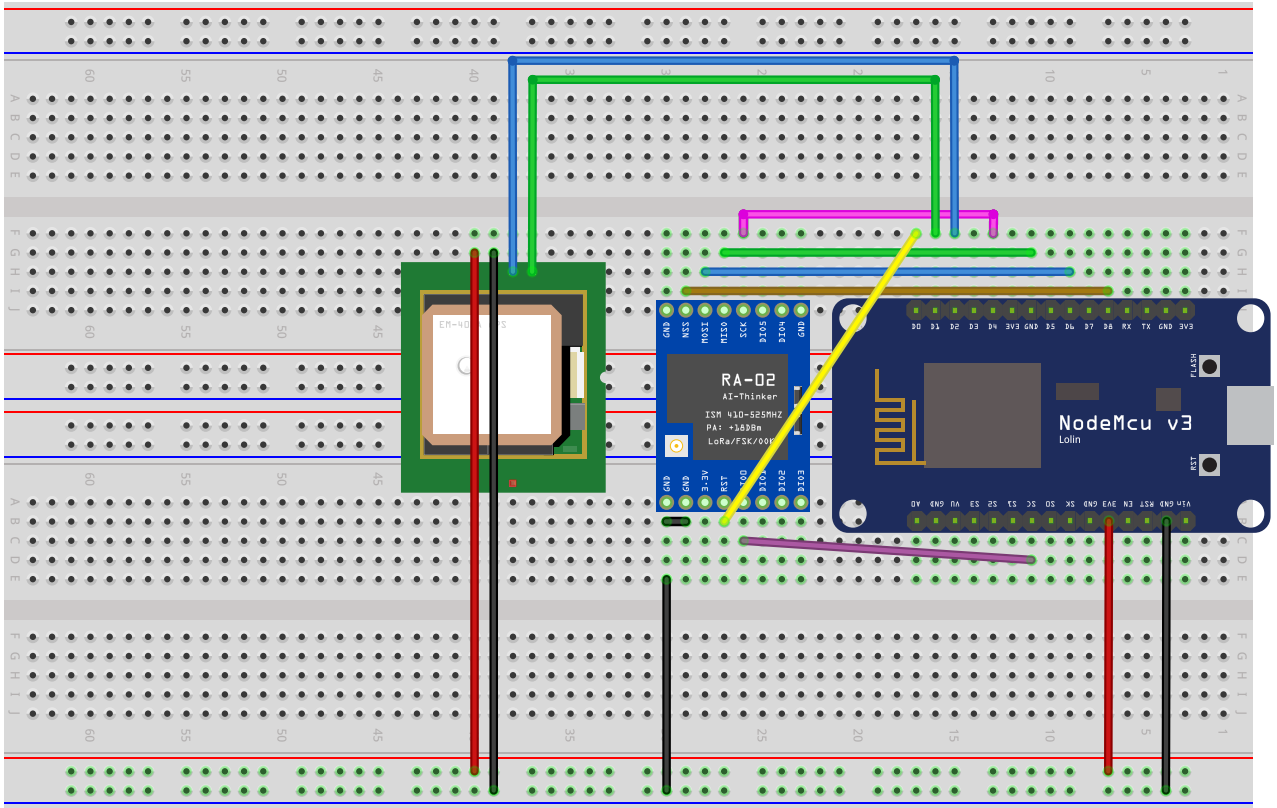
RA-02
AI-Thinker
ISM 410-525MHZ
PA: +18DBm
LoRa/FSK/OOK
NodeMcu v3
Lolin
FLASH
RST

fritzing