Prototype: Everywhere = Nowhere = Now

By Hubert Sia and Emma Beldick

Presented to Elio Bidinost

Concordia University

CART 360

Tangible Media & Physical Computing

Winter 2026 CART 360 /4 AA 10th March 2026

Concept & Narrative

Think of a context and an environment where you would like to intervene. Where will you present your project? Who is it made for?

Our project will be presented in a public space designed for anyone who needs an outlet to release their emotions safely and in a nonjudgmental environment.

Think about the kind of relationship you wish to foster among and between your users and the artifact or installation. What will your project afford users, and how would the experience make them reflect on themselves, their environment, society and your intentions?

It would allow them to safely release the feelings they keep to themselves, as we are implicitly taught to withhold our emotions, which is unsafe and unhealthy. The project would give users emotional security, without being judged or treated differently for expressing them.

Think about the notion of empowerment. Is your artifact really helping or challenging users?

Our project would be helping the user to look after their health and wellbeing, as keeping our emotions to ourselves actually causes a lot of harm to our mental health, and in time can be detrimental to ourselves and our relationships with others.

Think about how to successfully communicate your intentions - what Interaction Design Strategies will you employ? What are you trying to tell us?

We will create a design that is easy to carry around and easily accessible to the user. We are trying to tell you that it is okay to have feelings and that it's okay and safe to express them without fear of judgment.

Design and Documentation

Non-technical Evaluation of Sensors and Affordance

The project's function is that when you speak into the microphone, the device registers the level of the projection, which correlates with the lights, and then shows the number of times you have used it. When used, the device will respond empathetically to the voice.

Interaction Design strategy

1. **Input - Expression**
    - User produces sound (like speaking, exhaling, screaming)
    - Sound sensor detects loudness
2. **Processing -**
    - Pico counts sound events over one-second intervals
    - Thresholds translate sound into states: SILENT = non, CALM = low, AGITATED = medium, RELEASE = high
3. **Design and Documentation**
    - Corresponding LED lights up to indicate energy level
    - LCDs an emotionally supportive message from a randomized string

4. Reflection Phase

- 3 seconds later, the LED's fade
- LCD post-message (" You are centred" / "Release complete")
- Device returns to standby (ready for next expression)

Level of interaction

1. Physical: Handled, tactile, visible light cues
2. Cognitive: Reading reflective text and interpreting colours
3. Temporal: Rhythm of expression to reflection to reset fosters mindfulness

Journey Map, Diagram and visual documentations

Documents can be found on the following GitHub:

Fritzing Diagram and Journeymap PDF:

https://github.com/HubertSia/cart360/tree/main/prototype_everywhere-nowhere-now/prototype_documentations

Videos:

https://github.com/HubertSia/cart360/tree/main/prototype_everywhere-nowhere-now/prototype_documentations/videos

Photos:

https://github.com/HubertSia/cart360/tree/main/prototype_everywhere-nowhere-now/prototype_documentations/photos

Image version of them

Diagram

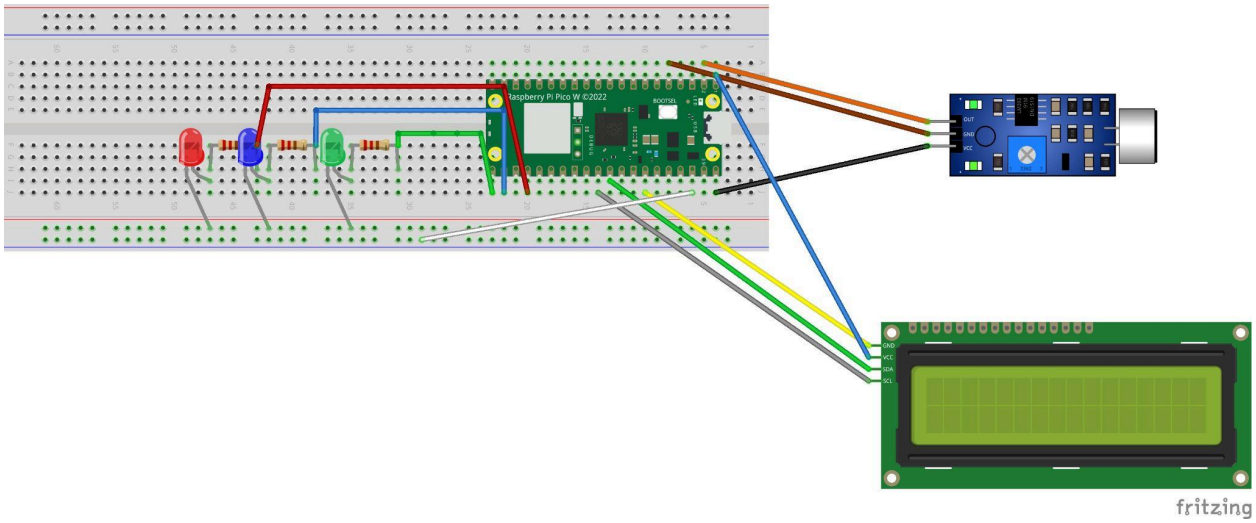

Journeymap

User steps	Discover	Awareness	Activation	Expression	Reflection	Closure
User actions	The person has the voice rage box around their body	User reads the instructions of how to use the device	User leans toward the box's opening, where a microphone waits to capture their voice	User yells or vocalize into the box	User pauses after using the voice rage box	User closes the device and puts it away
User Thoughts	The user may think "Can this device actually help me?"	"So i can just yell or shout and it will register that I had did that?"	"Alright let's see if this works"	"Finally I can get this off my chest"	"I feel a lot better now"	"That really work, I wasn't expecting it too"
Emotions	The user may feel skeptical or hesitant of using it.	Feel interested or intrigued	hesitant but willing to try it	From anger or frustration → Relief	Relieved and Calm	More Relaxed and Satisfied
System Response	The device will have a light indicator light up once the device registers the voice at a certain decibels.	The screen glow slowly, saying messages that is ready to use.	Device would display on screen the amount of time the device was used and a light would display if it is in a certain decibels	Device would show either a green light, yellow light, or red light depending how loud the voice is.	Device will retain the user times of used.	LEDs change slowly to indicate sustained interaction fading in and out as voice intensity stabilizes. The lcd screen is on stand by

Implementation Summary

Hardware

- Raspberry Pi Pico W microcontroller
- Sound Sensor Module
- 3 LED's (green/yellow/red, GPIO 16-18)
- 16x2 I²C LCD (GP8-9)
- Wires
- Breadboard
- 3x 220Ω Resistor

Software

Written in MicroPython, the main script handles:

- GPIO Setup, LED control
- I²C LCD text rendering
- Emotional message selection
- Sensor data to emotional mapping logic
- Cycling timing structure for the phase

Core Loop Rare: ~1 Hz emotional sample with 3s reflection.

Session tracking: Counts each completed expression.

Project Inspiration

POP! By Gentilhomme: https://www.youtube.com/watch?v=wb3FABDbDY4

An audiovisual installation that engages with themes of joy, anxiety, and catharsis through playful visuals and dynamic sound design. The audience engages with an animated environment that responds enthusiastically to their movement and presence, transforming everyday actions into dynamic displays of colour and sound. The audiovisual installation effectively showcases the use of responsive design to create emotion and movement in tangible ways.

Scream Room By Kylin O'Brien:
https://www.mtpr.org/montana-news/2018-05-01/scream-room-gives-the-flathead-a-chance-to-vent-some-emotions

The installation offers participants a soundproof room where they can express their emotions by screaming freely, without criticism or judgment. The concept focuses on the therapeutic benefits associated with screaming in a soundproof room. The simplicity of this design, consisting of a small enclosed space, shows how interaction can lead to a powerful emotional response.

Scream Now By Valérie Hallier: https://www.youtube.com/watch?v=Wldve6V0HRo

This project invites users to record their screams, which are then visualized through digital animations and soundscapes. The captured audio becomes part of a growing collective archive of voices, transforming individual expressions into a shared emotional landscape. This piece explores catharsis, connection, and the relationship between personal emotion and communal experience through digital media.

Role assigned for this assignment:

Hubert Sia: Implementation, Hardware, Software, Interaction Design, Photos and Videos

Emma Beldick: Concept and Narrative, Project inspiration, Journey Map, Non-technical Evaluation of sensor and affordance.

Check the github:

https://github.com/HubertSia/cart360/tree/main/prototype_everywhere-nowhere-now