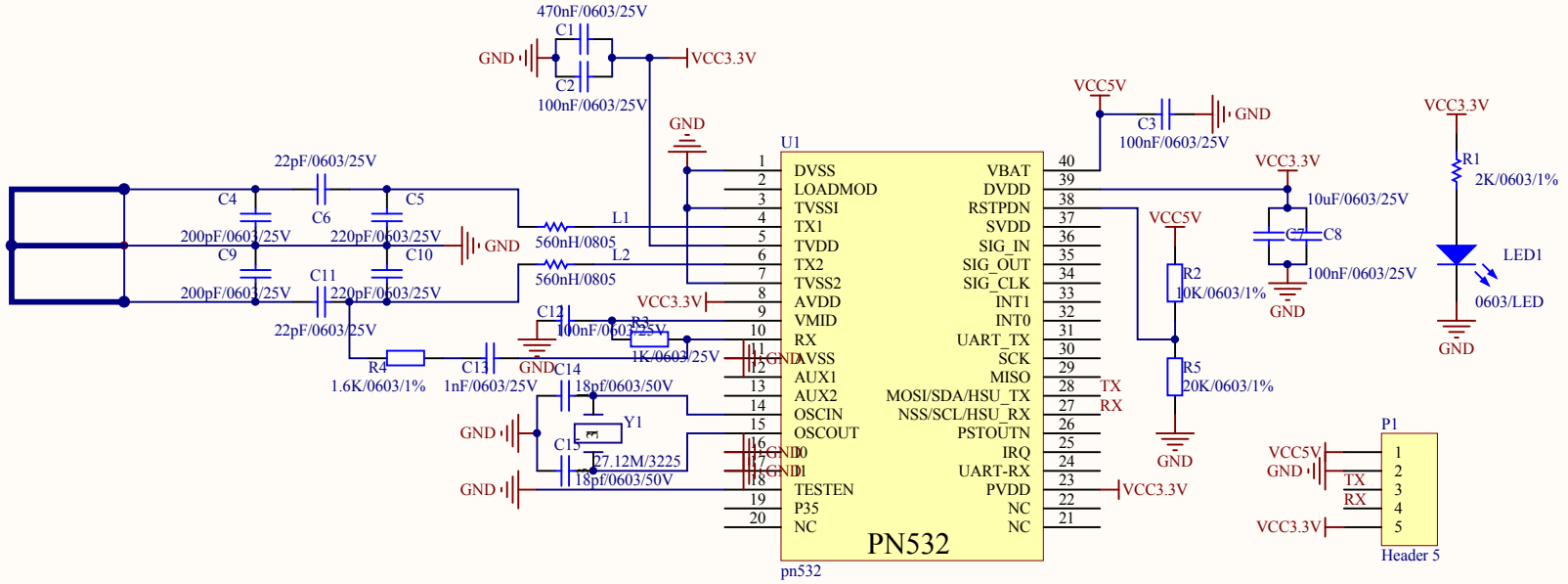

Title		
Size A4	Number	Revision
Date: 2016/3/4		Sheet of
File: F:\AD \PN532 - v1.0\pn532.SchDoc		Drawn By: