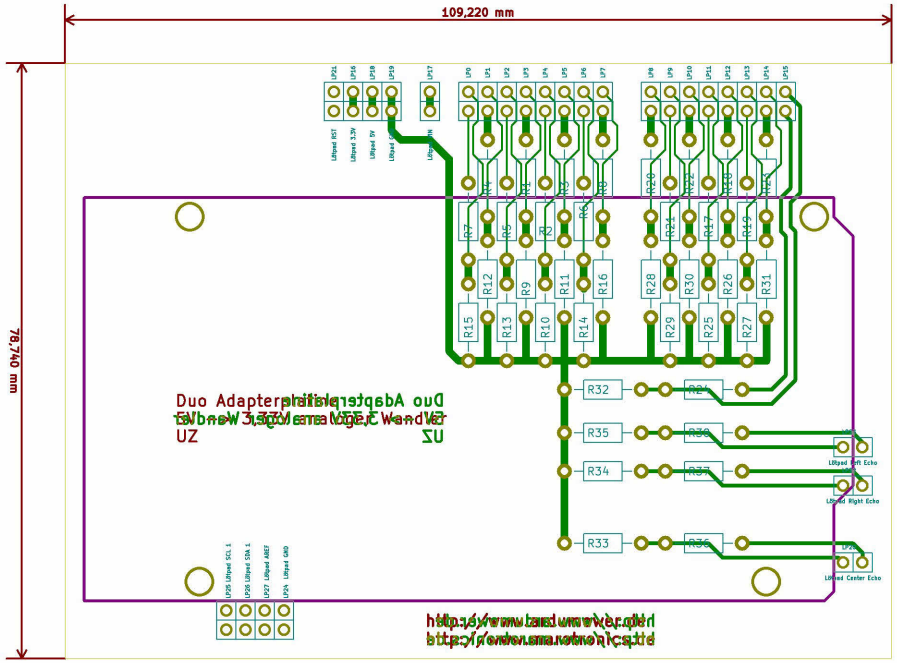

Sheet:
File: Duo_Adapter_V0.5.kicad_pcb

Title: Ardumower VCN PCB

Size: A4	Date: 23 Dez 2014	**Rev: 0,05**
KiCad E.D.A. kicad (2015-01-23 BZR 5386)-product		Id: 1/1