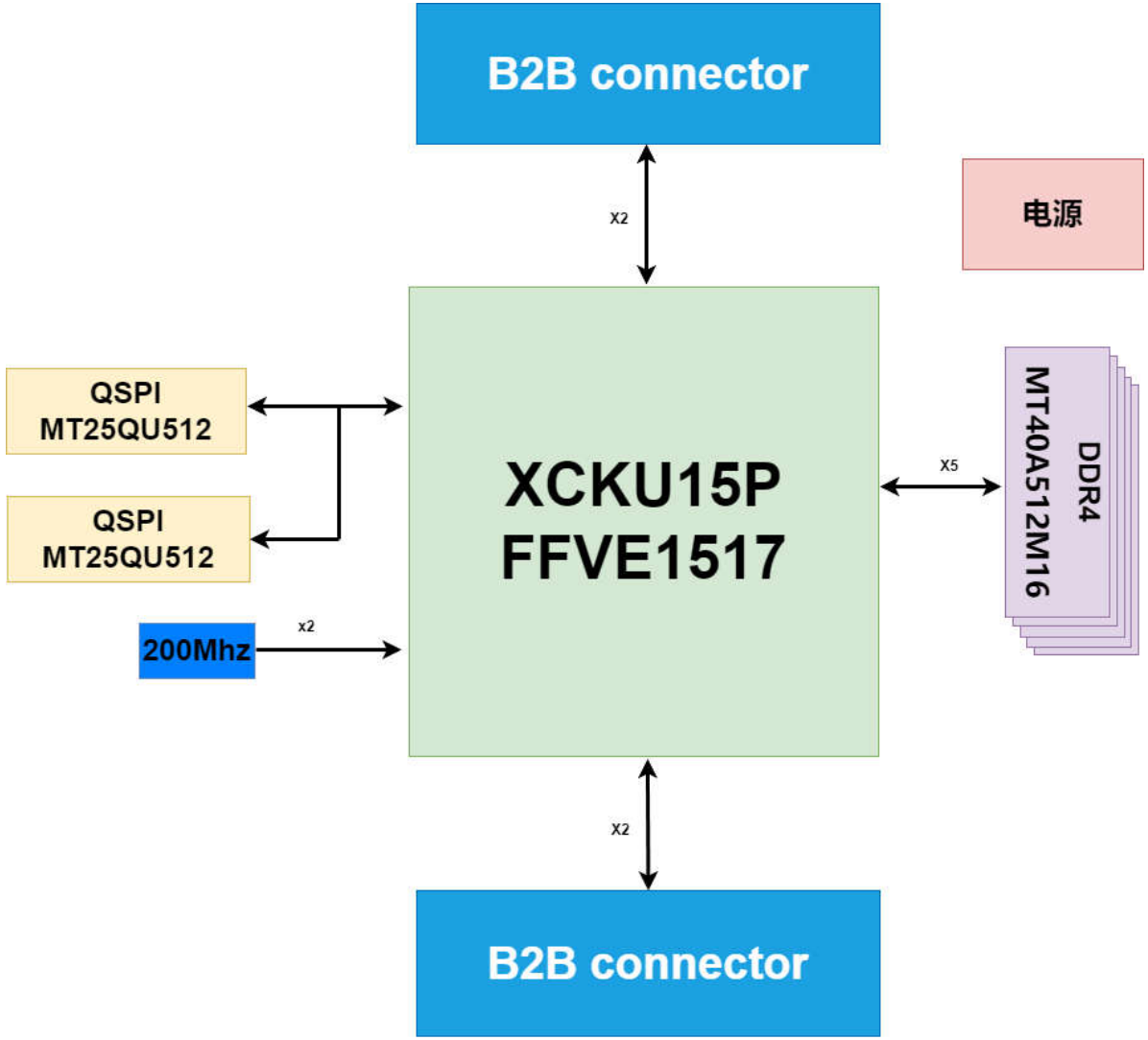

ALINX http://www.alinx.com

Title: PAGE01 BLOCK DIAGRAM

Size | Document Number: ACKU15核心板 Schematics | Rev 1.0

Date: Wednesday, November 08, 2023 | Sheet 1 of 23

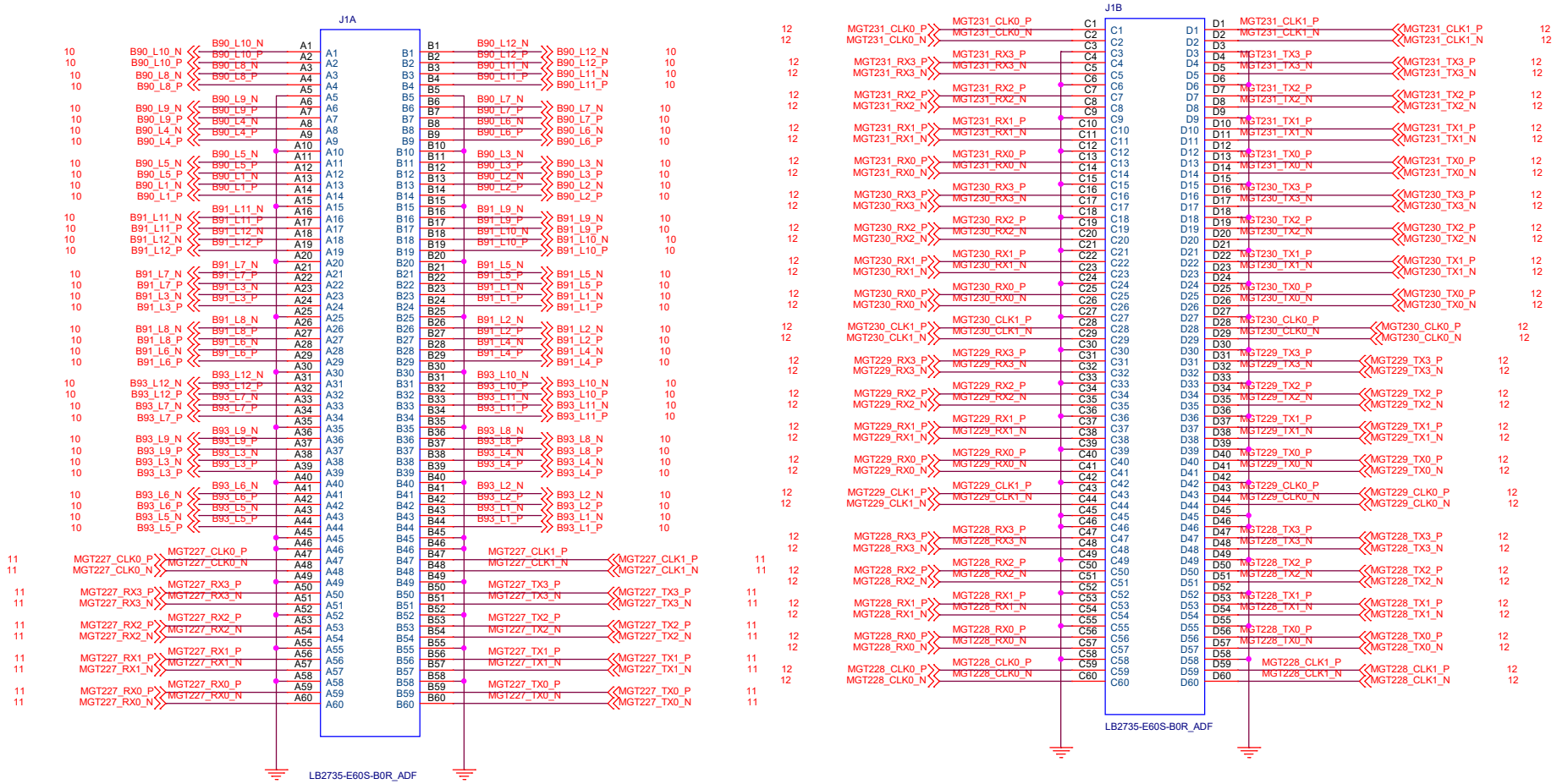

ALINX Confidential

ALINX http://www.alinx.com

Title: PAGE02 BTB Connector1

Size | Document Number: ACKU15核心板 Schematics | Rev 1.0

Date: Wednesday, November 08, 2023 | Sheet 2 of 23

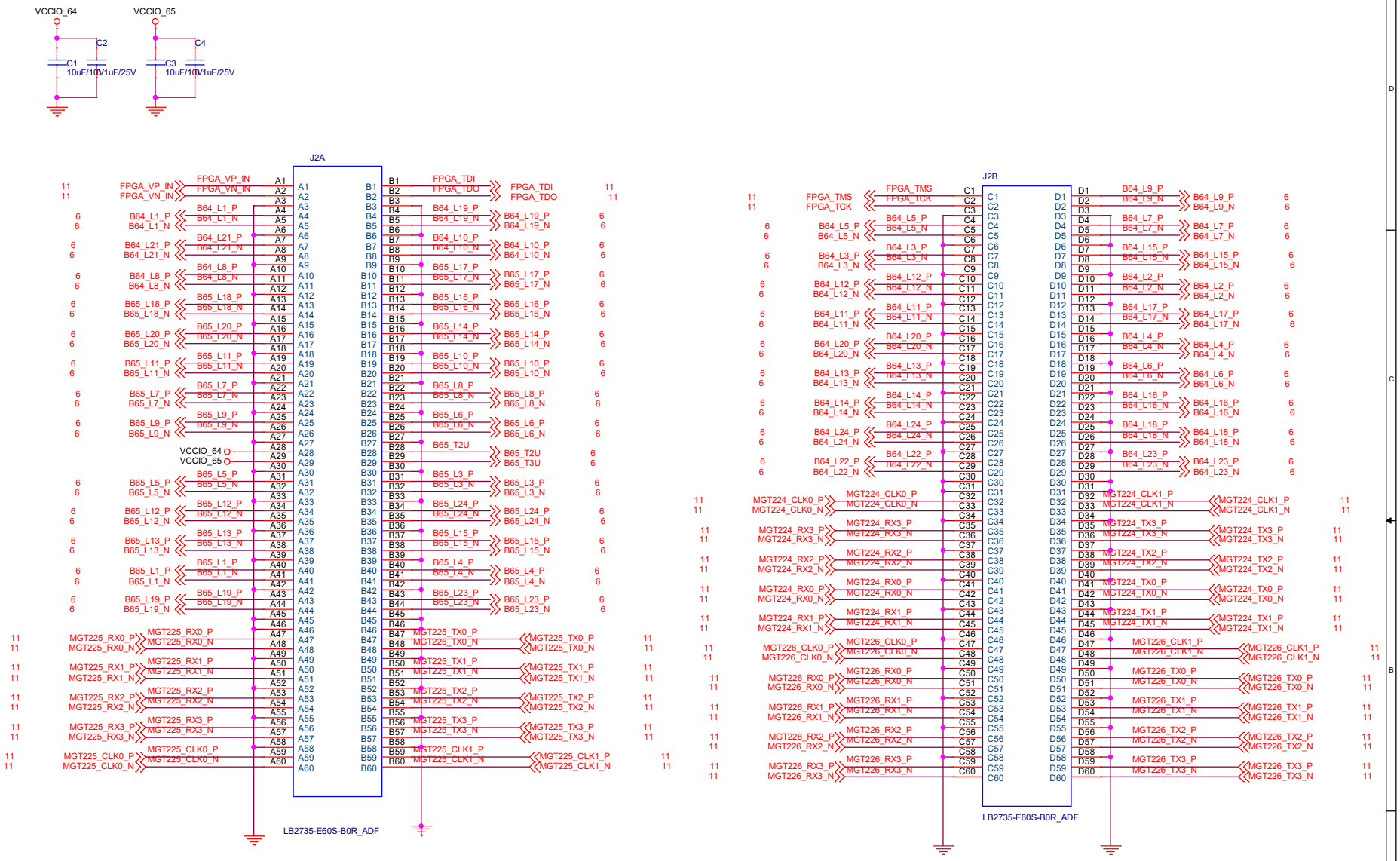

ALINX Confidential

ALINX	http://www.alinx.com
Title	PAGE03 BTB Connector2
Size / Document Number	ACKU15核心板 Schematics
Rev	1.0
Date:	Wednesday, November 08, 2023
Sheet	3 of 23

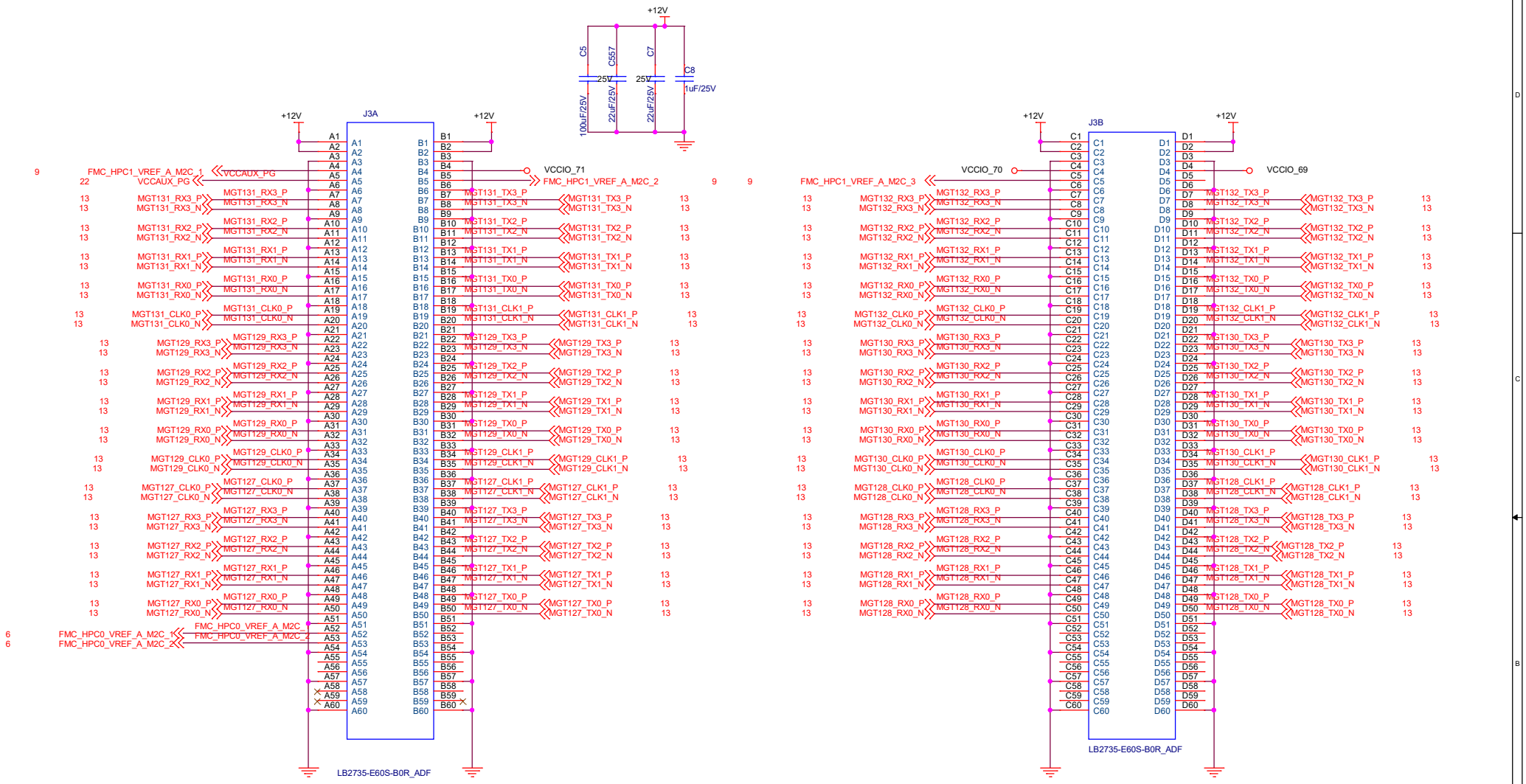

ALINX Confidential

ALINX Http://www.heijin.org

Title: PAGE04 BTB Connector3

Size | Document Number: ACKU15核心板 Schematics | Rev 1.0

Date: Wednesday, November 08, 2023 | Sheet 4 of 23

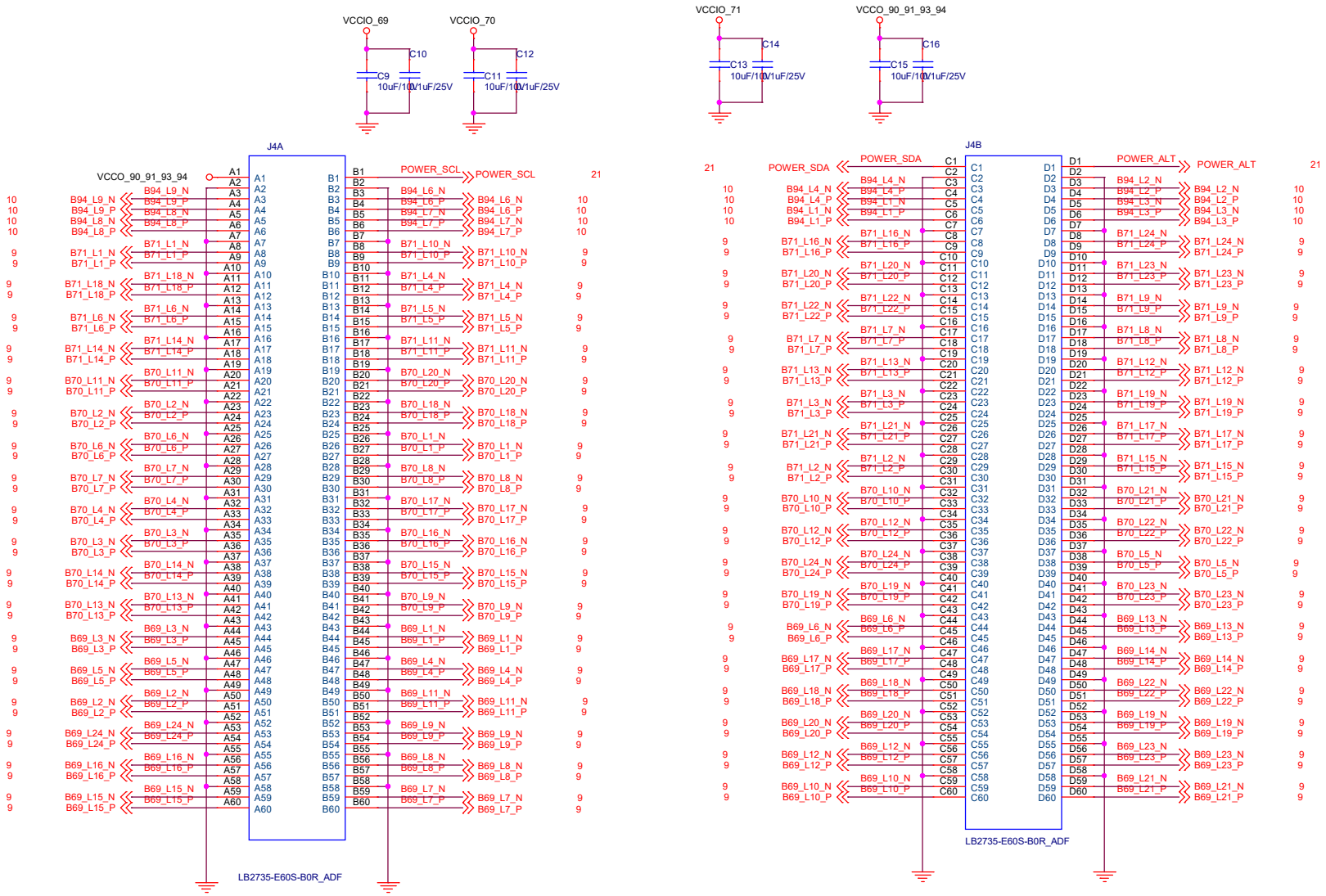

ALINX Confidential

ALINX Http://www.heijin.org

Title	PAGE05 BTB Connector4
Size	
Document Number	ACKU15核心板 Schematics
Rev	1.0
Date:	Wednesday, November 08, 2023
Sheet	5 of 23

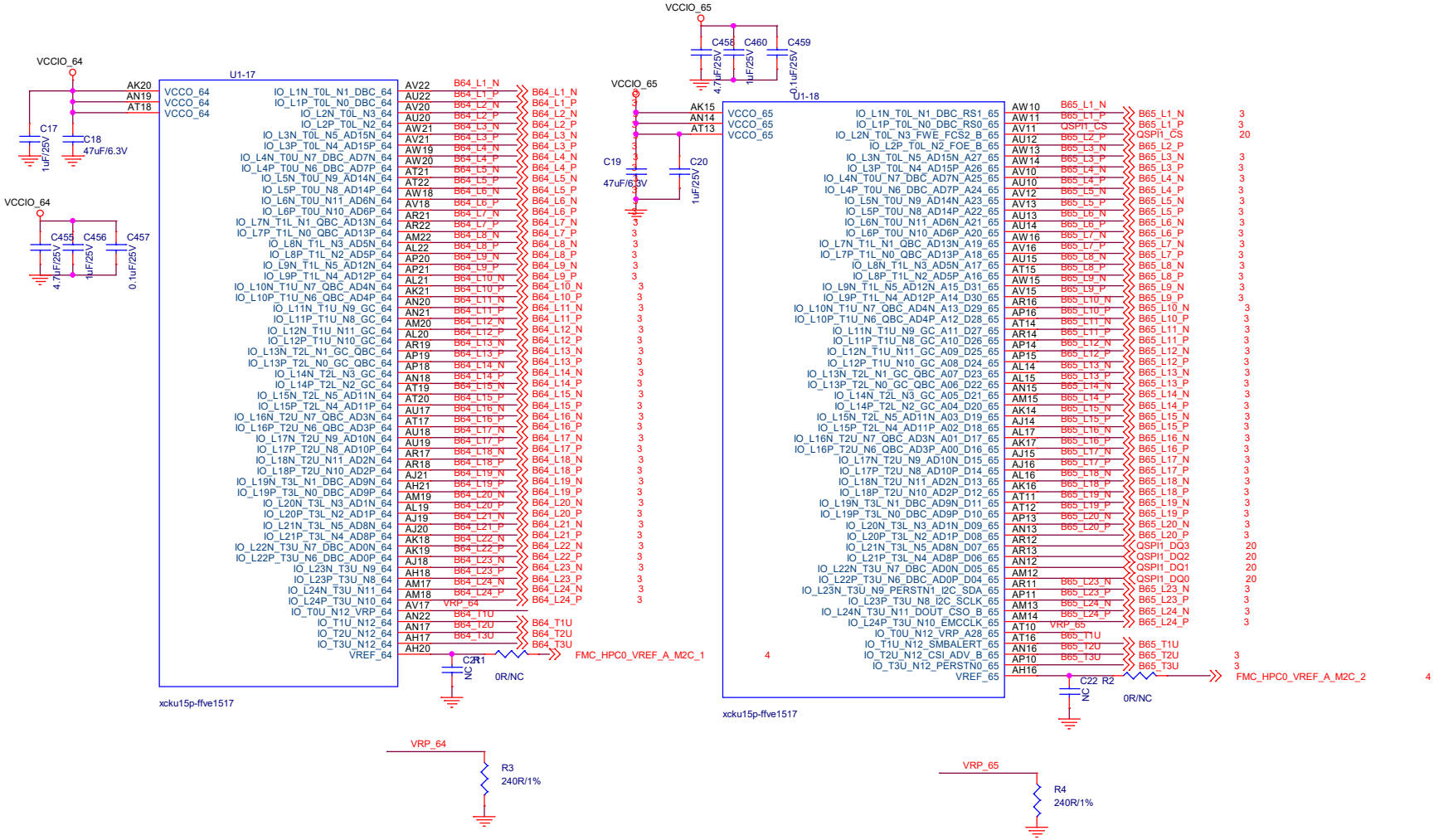
U1-17
xcku15p-ffve1517
VCCIO_64
VCCIO_64
VCCIO_64

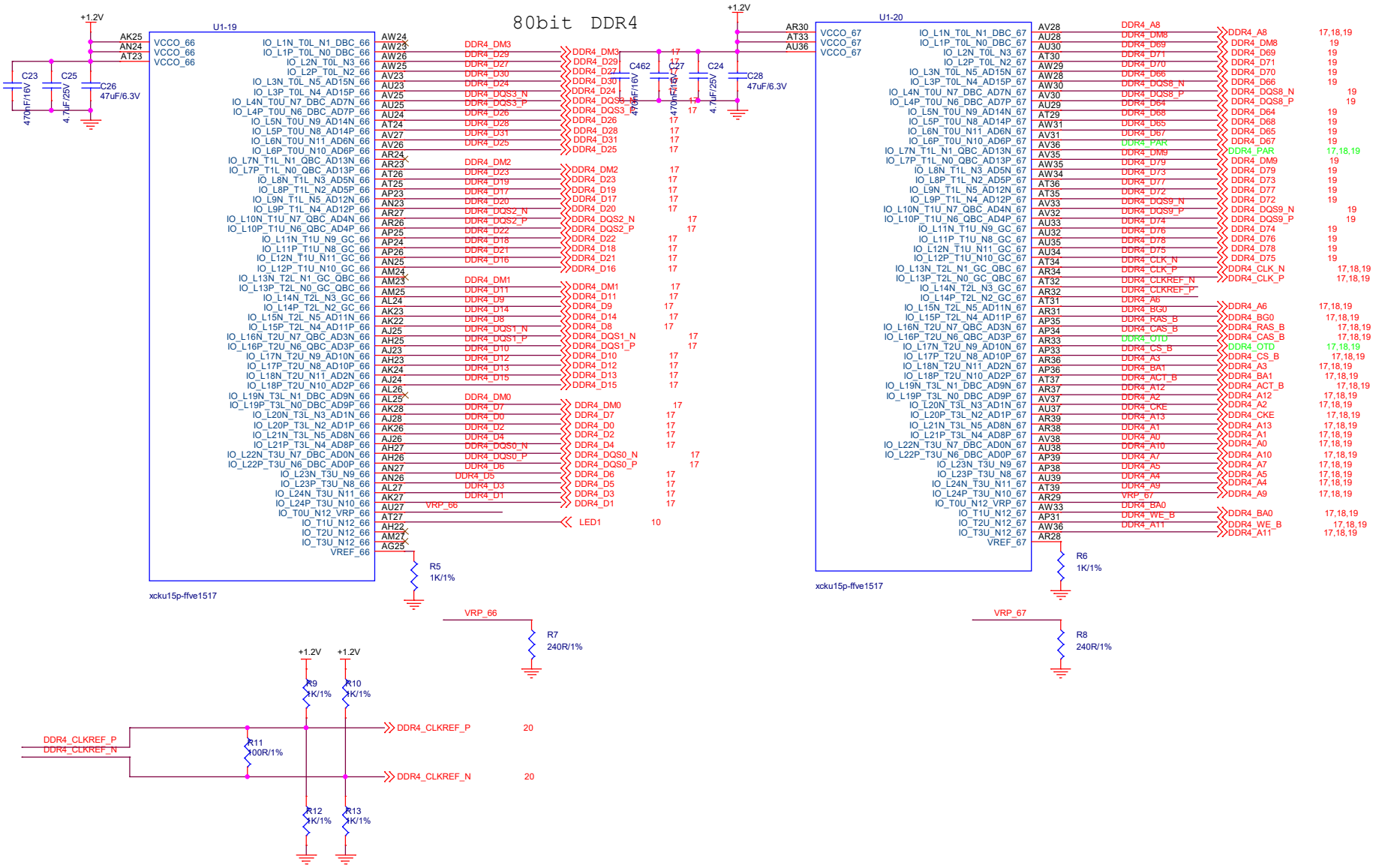

ALINX Confidential

ALINX Http://www.alinx.com.cn

Title	PAGE07 FPGA_BANK66_67	
Size	Document Number	Rev 1.0
Date: Wednesday, November 08, 2023	Sheet 7 of 23	

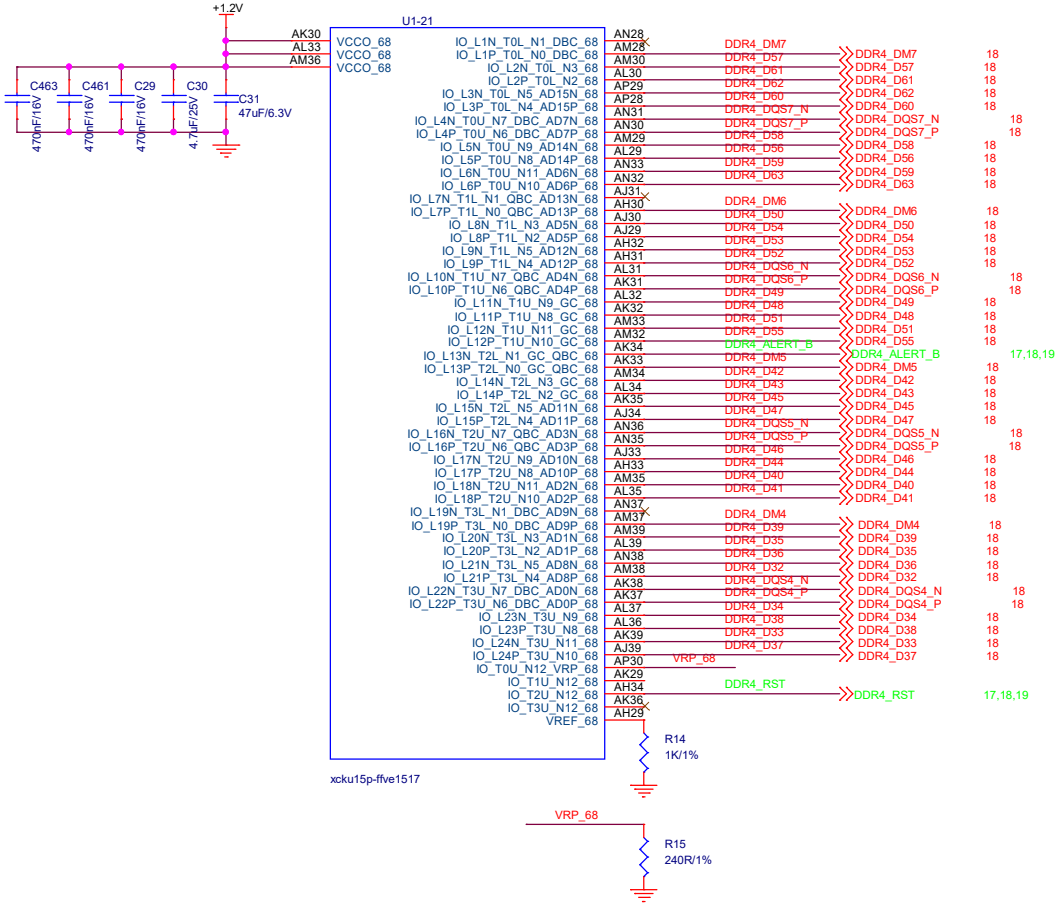

ALINX Confidential

ALINX Http://www.alinx.com.cn

Title: PAGE08 FPGA_BANK68

Size | Document Number | Rev 1.0

Date: Wednesday, November 08, 2023 | Sheet 8 of 23

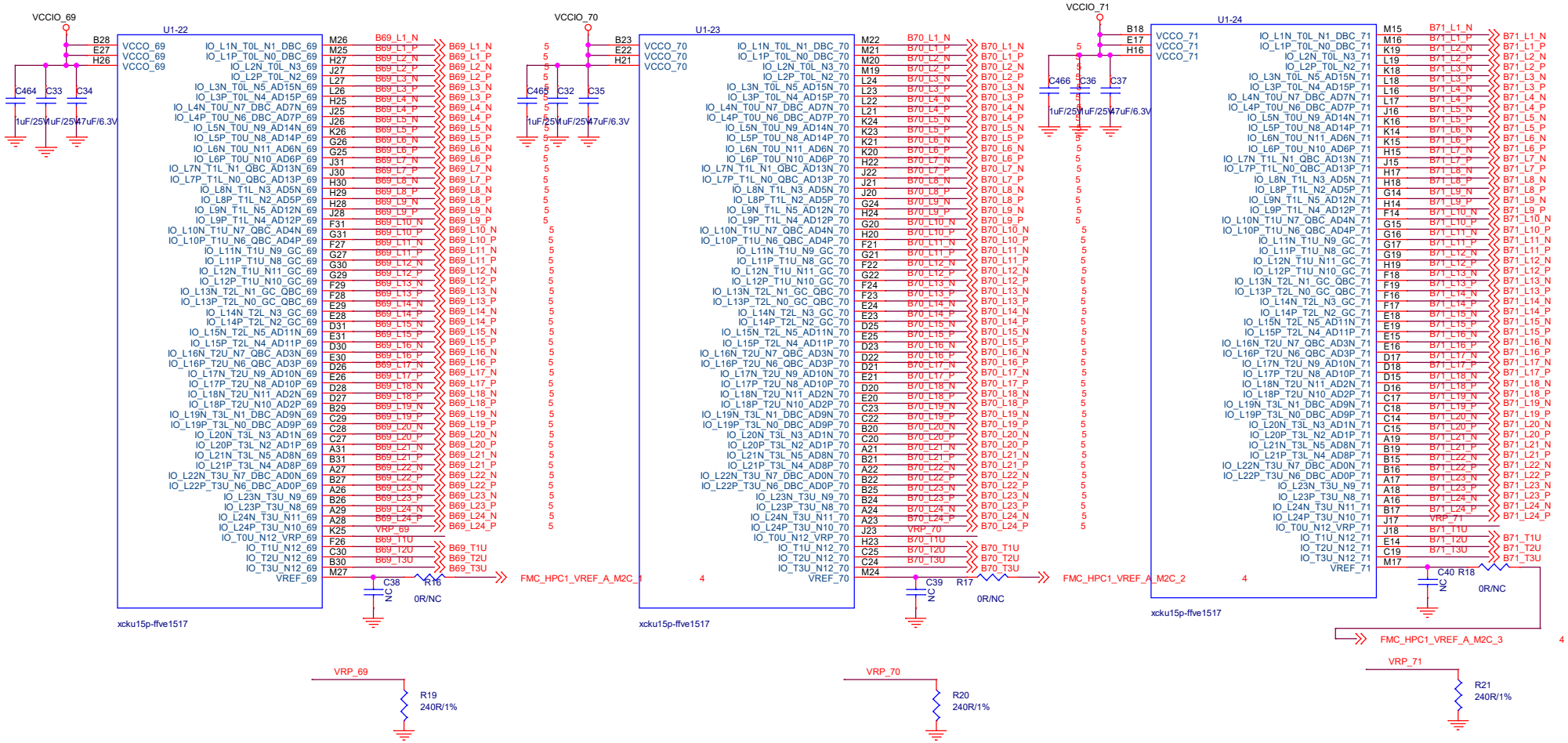

ALINX Http://www.alinx.com.cn

Title: PAGE09 FPGA_BANK69_70_71

Size	Document Number	Rev
		1.0

Date: Wednesday, November 08, 2023 Sheet 9 of 23

ALINX Confidential

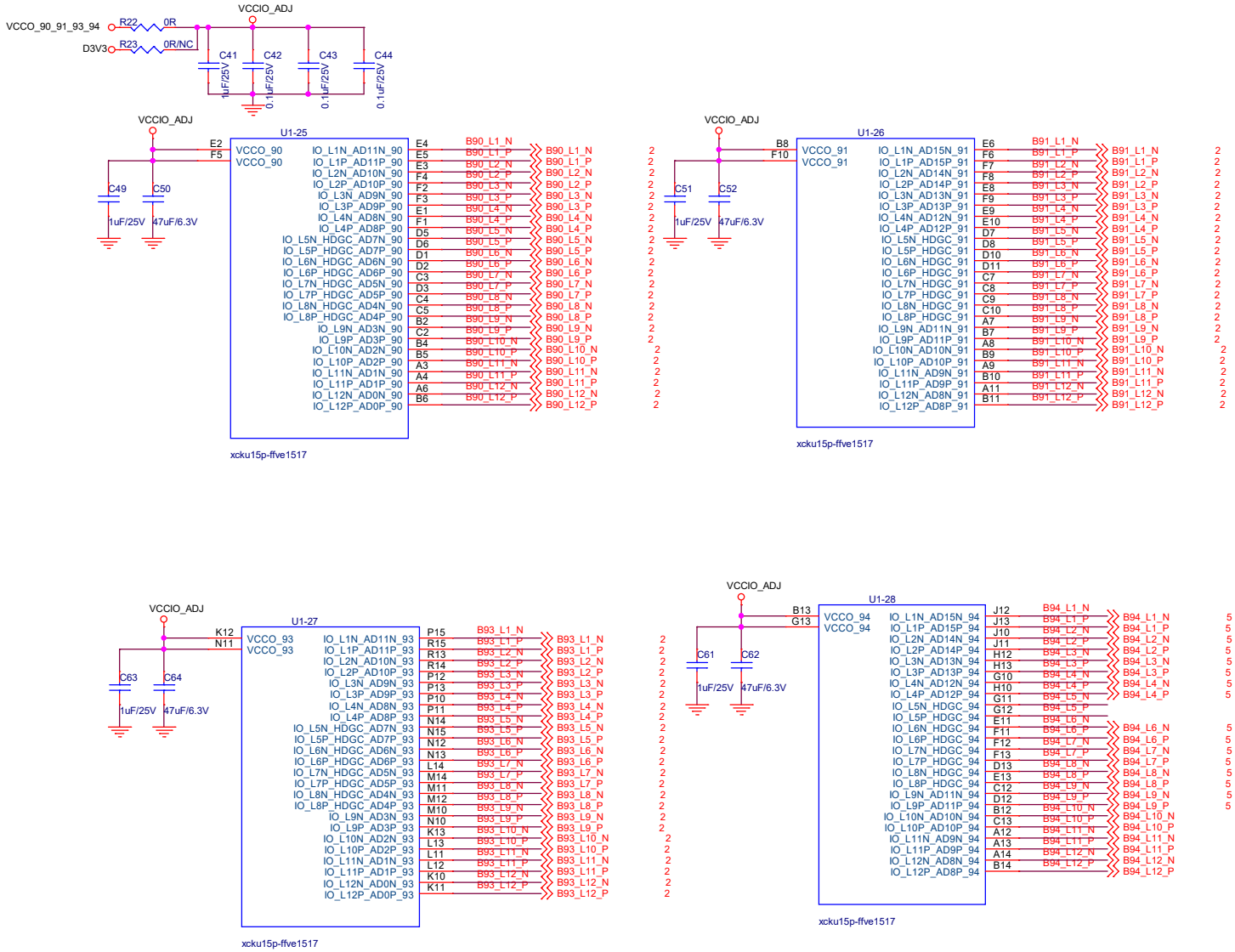

ALINX Http://www.alinx.com.cn

Title: PAGE10 FPGA_BANK90_91_93_94

Size	Document Number	Rev
		1.0

Date: Wednesday, November 08, 2023 Sheet 10 of 23

ALINX Confidential

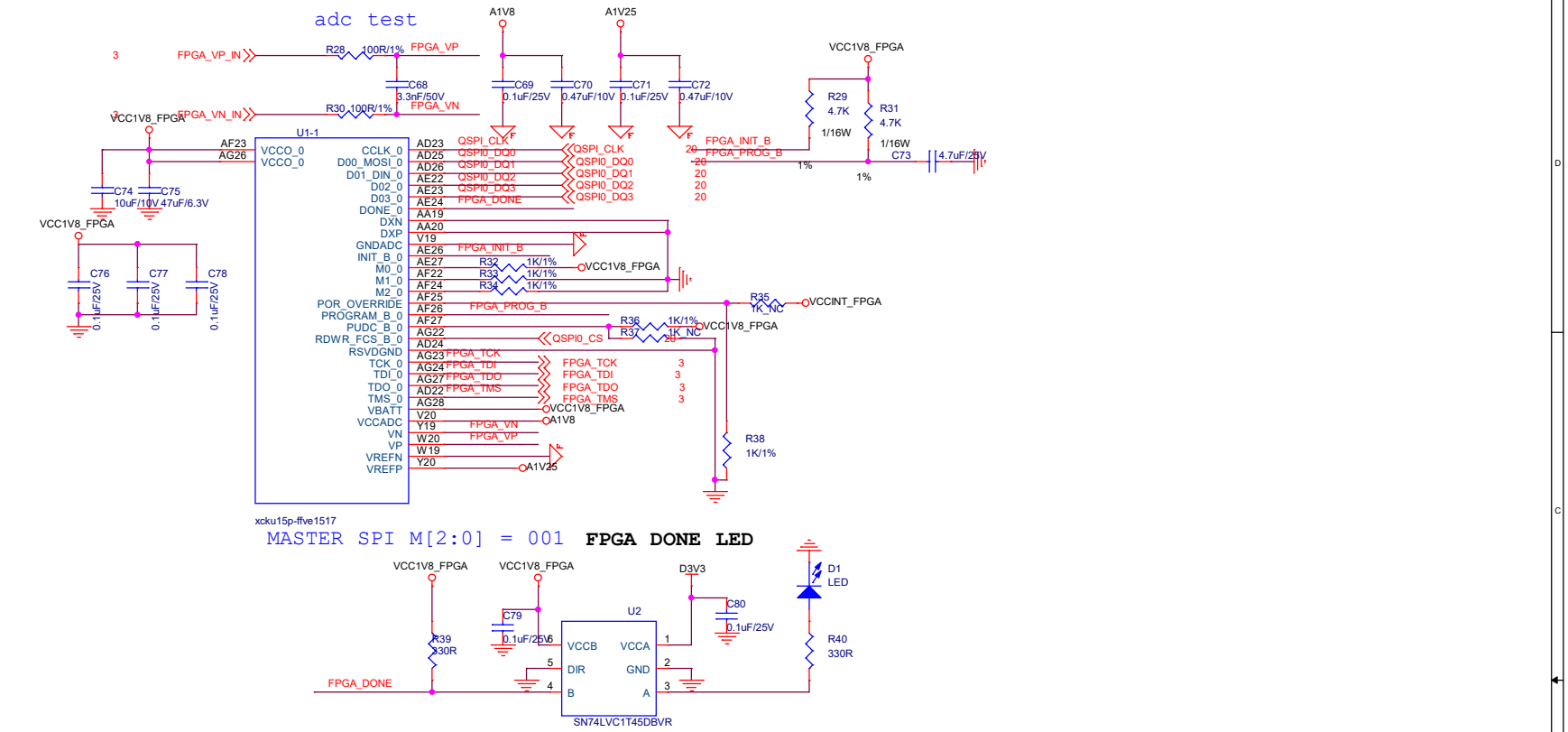

MASTER SPI M[2:0] = 001 **FPGA DONE LED**

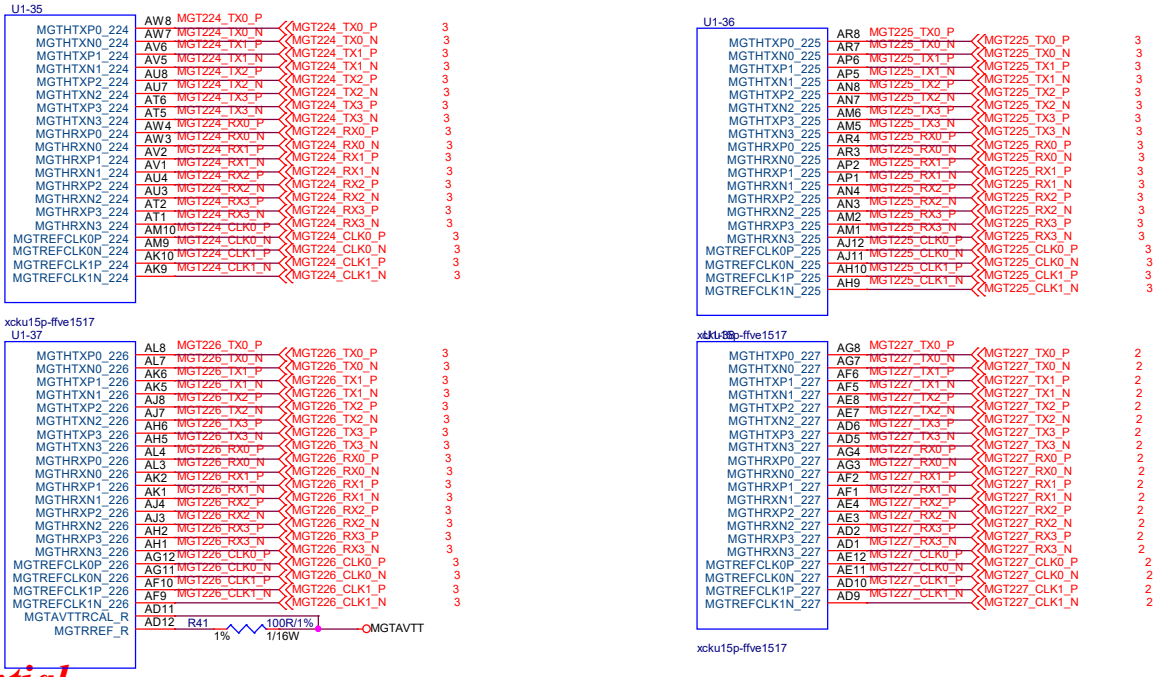

ALINX Http://www.alinx.com.cn

Title: PAGE11 FPGA_GTH_224~227_CFG

Size	Document Number	Rev
		1.0

Date: Wednesday, November 08, 2023 Sheet 11 of 23

ALINX Confidential

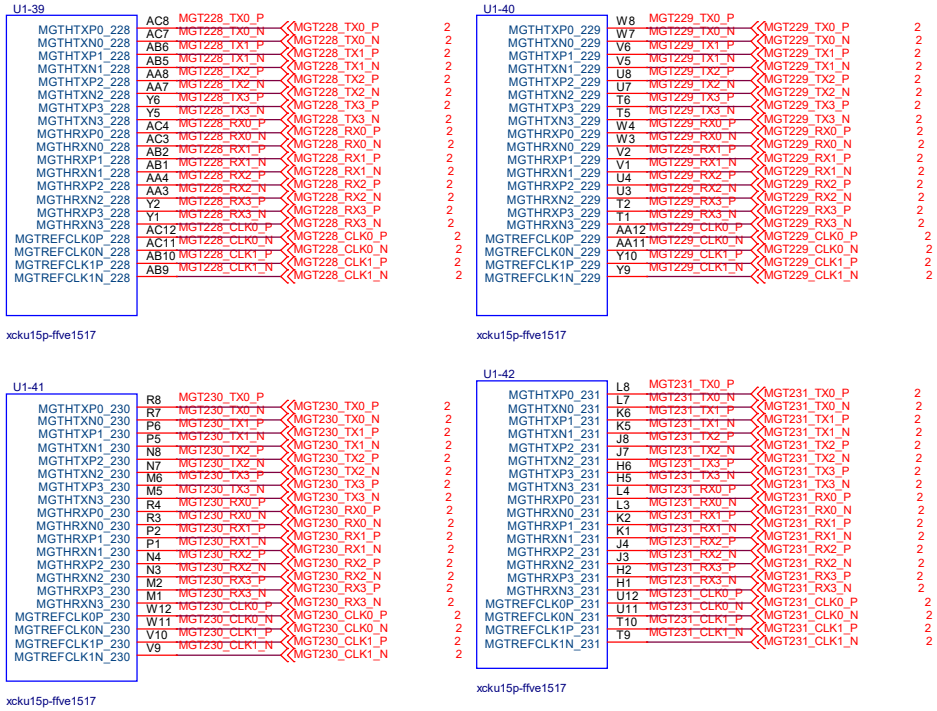

ALINX Http://www.alinx.com.cn

Title
PAGE12 FPGA_GTH_228~231

Size	Document Number	Rev
		1.0

Date: Wednesday, November 08, 2023 Sheet 12 of 23

ALINX Confidential

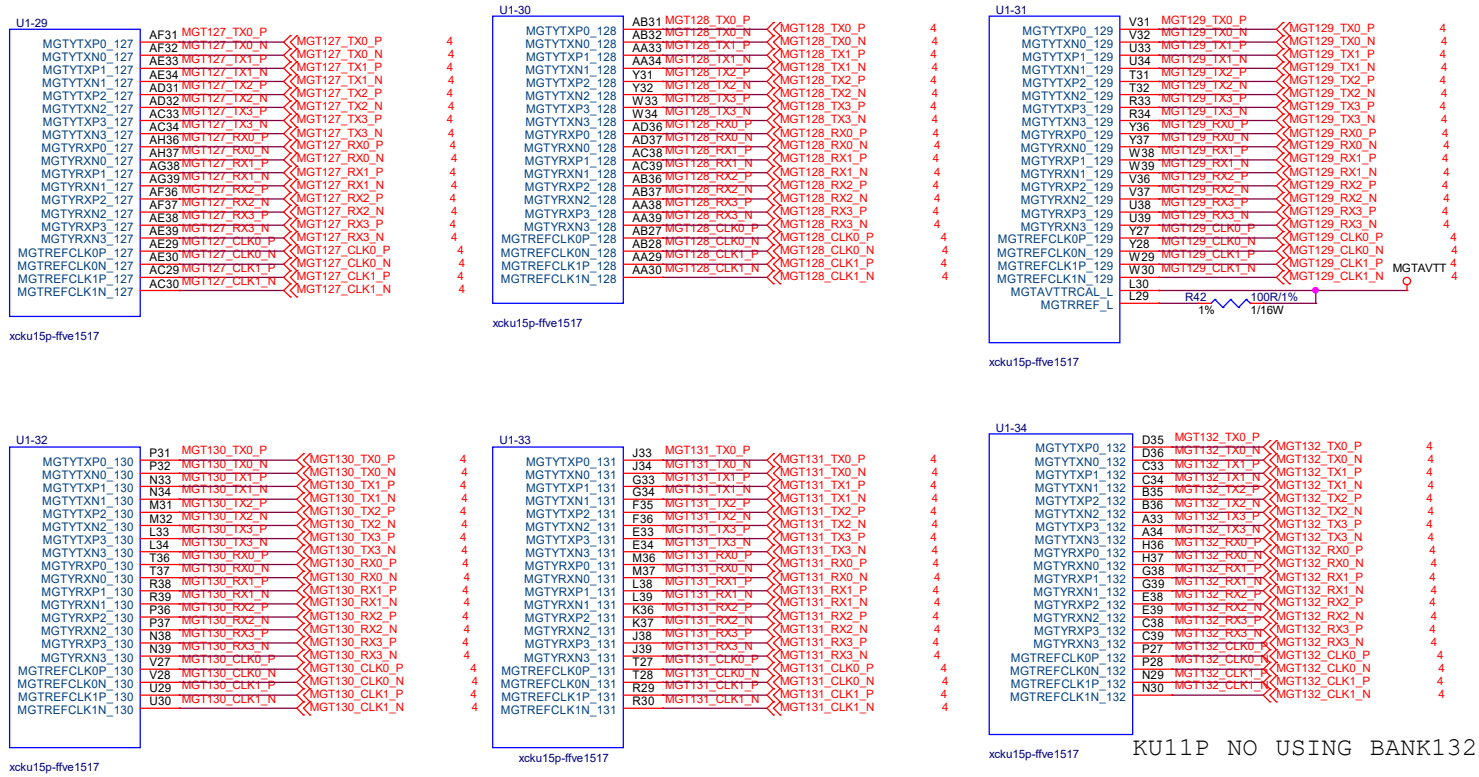

ALINX Http://www.alinx.com.cn

Title
PAGE13 GTY127~132

Size	Document Number	Rev
		1.0

Date: Wednesday, November 08, 2023 Sheet 13 of 23

ALINX Confidential

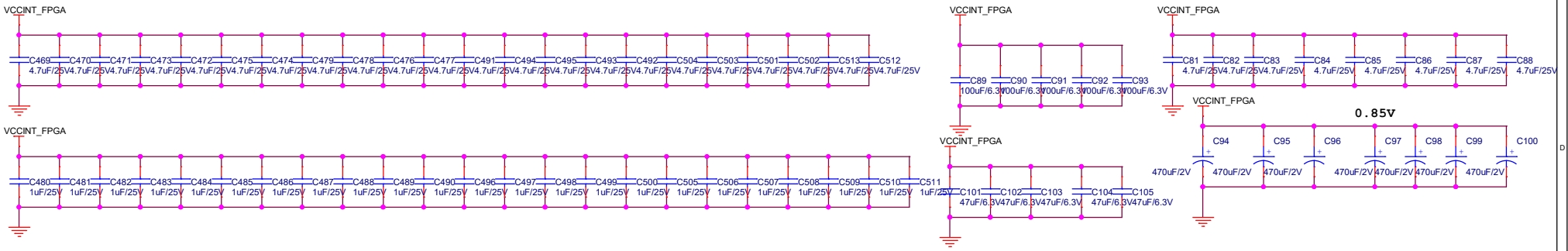

VCCINTIO_BRAM_FPGA 0.85V@3A

VCCINT/VCCINT_IO/VCC_BRAM together @20~30A

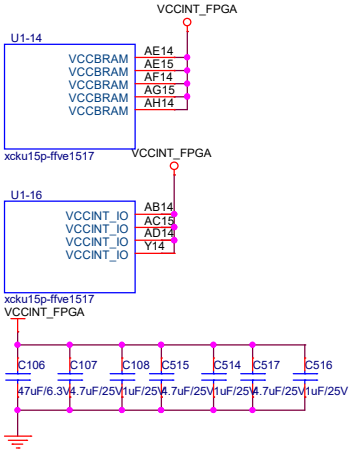

VCCAUX 1V8@3A

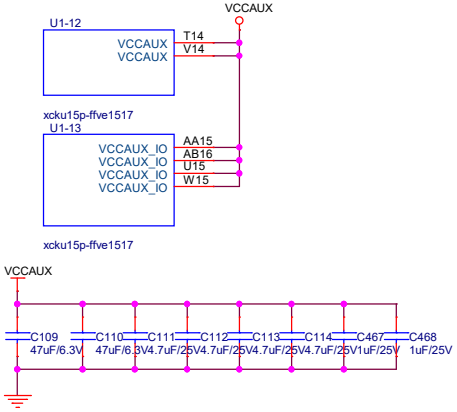

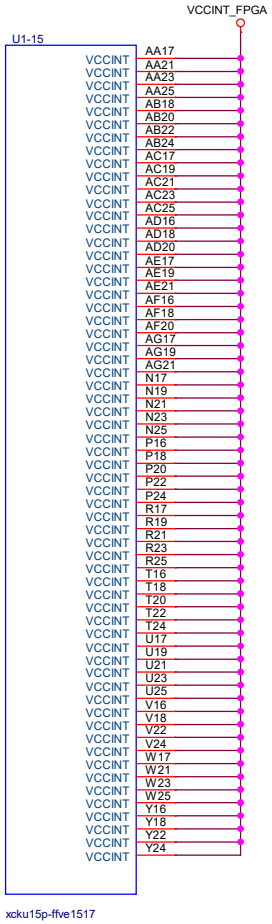

ALINX Http://www.alinx.com.cn

Title	PAGE14 FPGA_POWER	
Size	Document Number	Rev 1.0
Date: Wednesday, November 08, 2023	Sheet 14 of 23	

ALINX Confidential

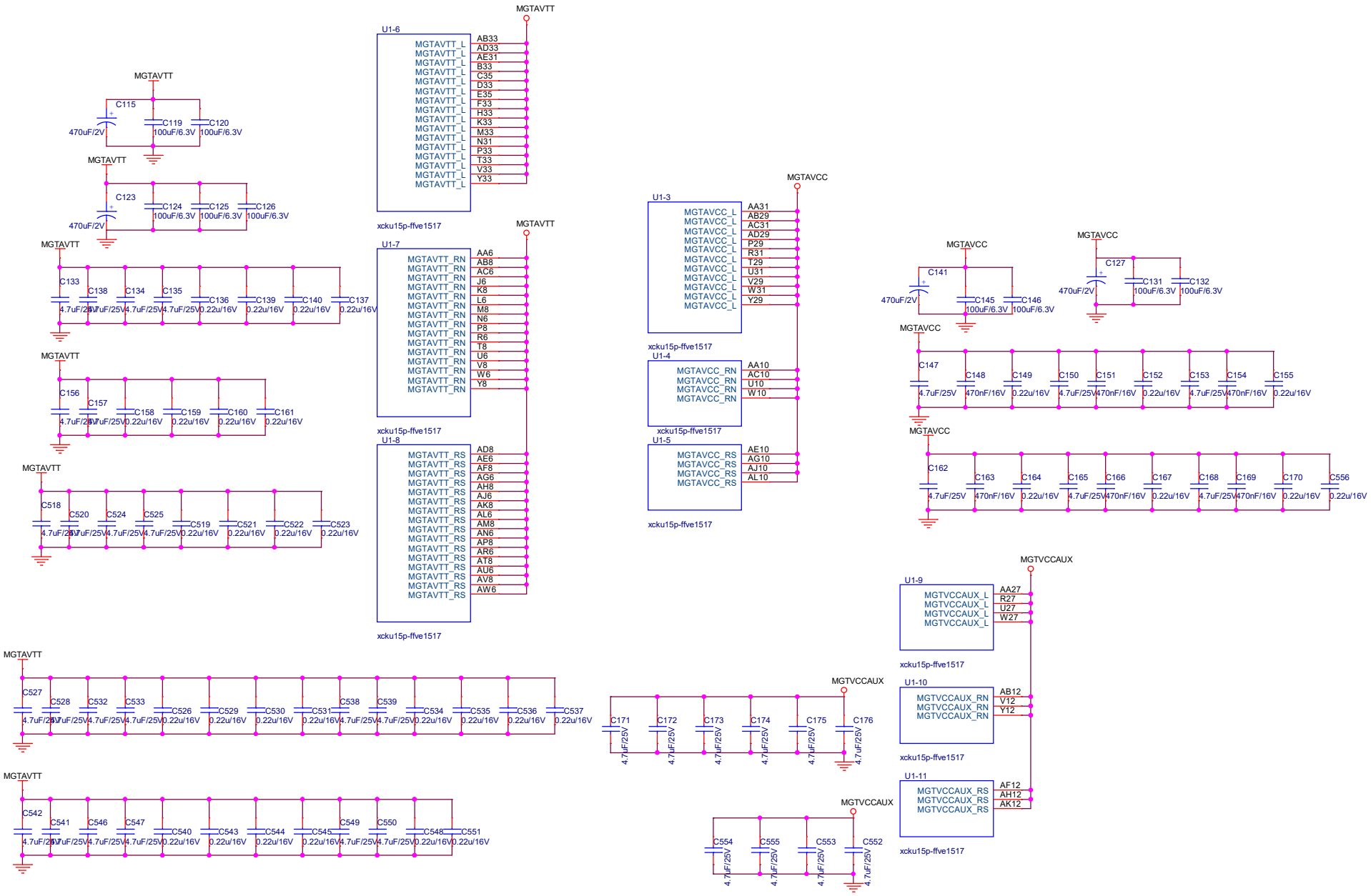

ALINX Confidential

ALINX Http://www.alinx.com.cn

Title	PAGE15 FPGA_POWER_MGT	
Size	Document Number	Rev 1.0
Date: Wednesday, November 08, 2023	Sheet 15 of 23	

SCHEMATIC1

ALINX Http://www.alinx.com.cn

Title

PAGE16 FPGA_GND

Size	Document Number	Rev
		1.0

Date: Wednesday, November 08, 2023 Sheet 16 of 23

ALINX Confidential

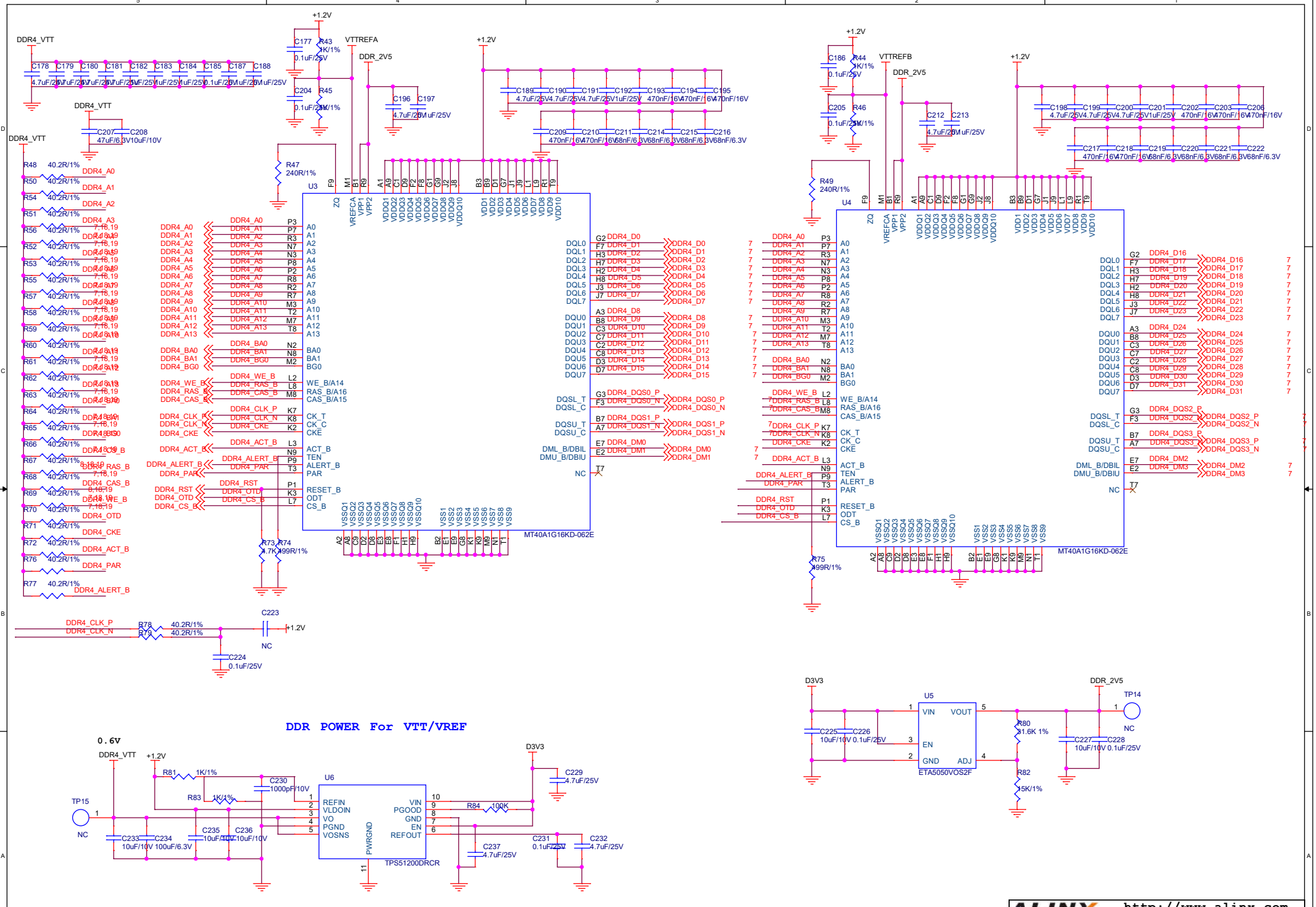

ALINX http://www.alinx.com

Title: PAGE17 DDR4_1

Size | Document Number: ACKU15核心板 Schematics | Rev 1.0

Date: Wednesday, November 08, 2023 | Sheet 17 of 23

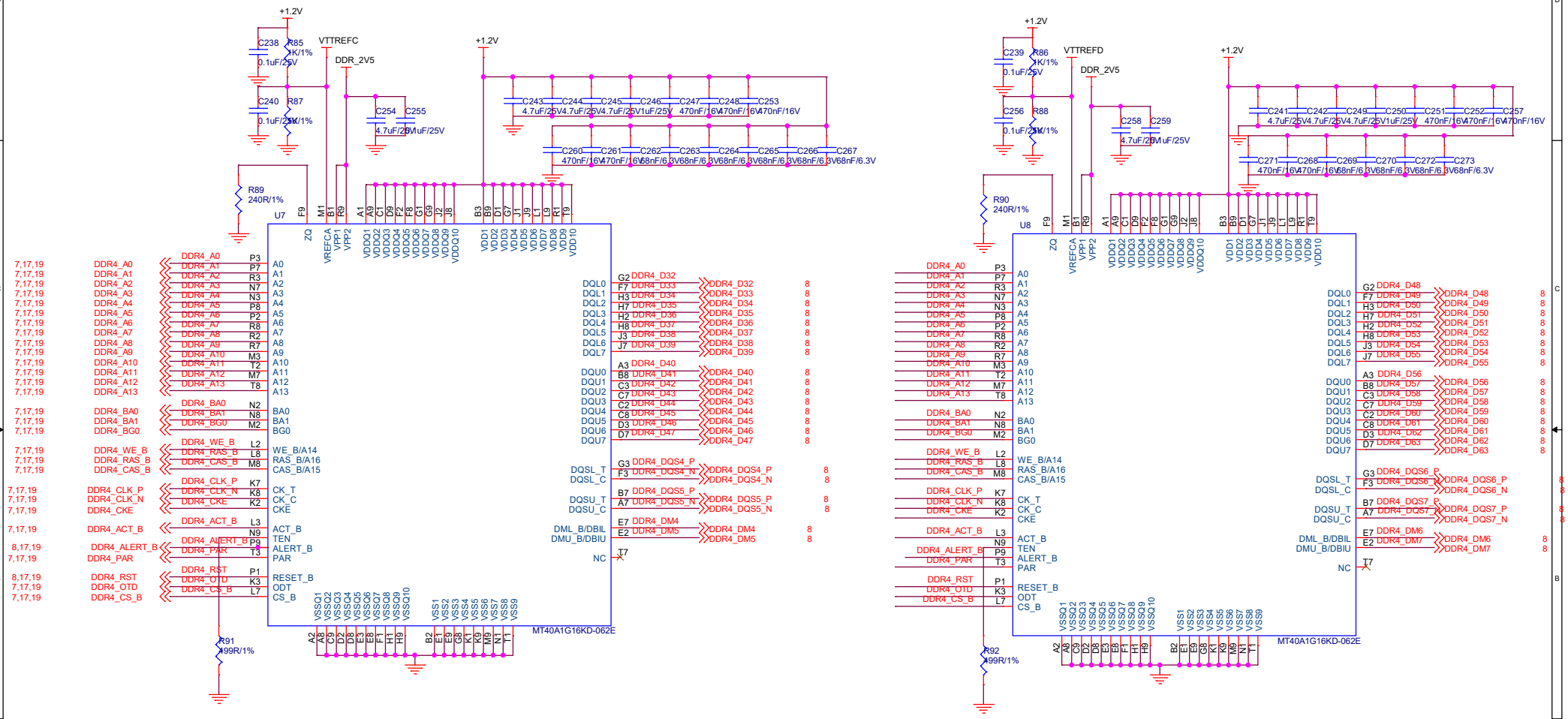

ALINX Confidential

ALINX www.alinx.com

Title: PAGE18 DDR4_2

Size | Document Number: ACKU15核心板 Schematics | Rev 1.0

Date: Wednesday, November 08, 2023 | Sheet 18 of 23

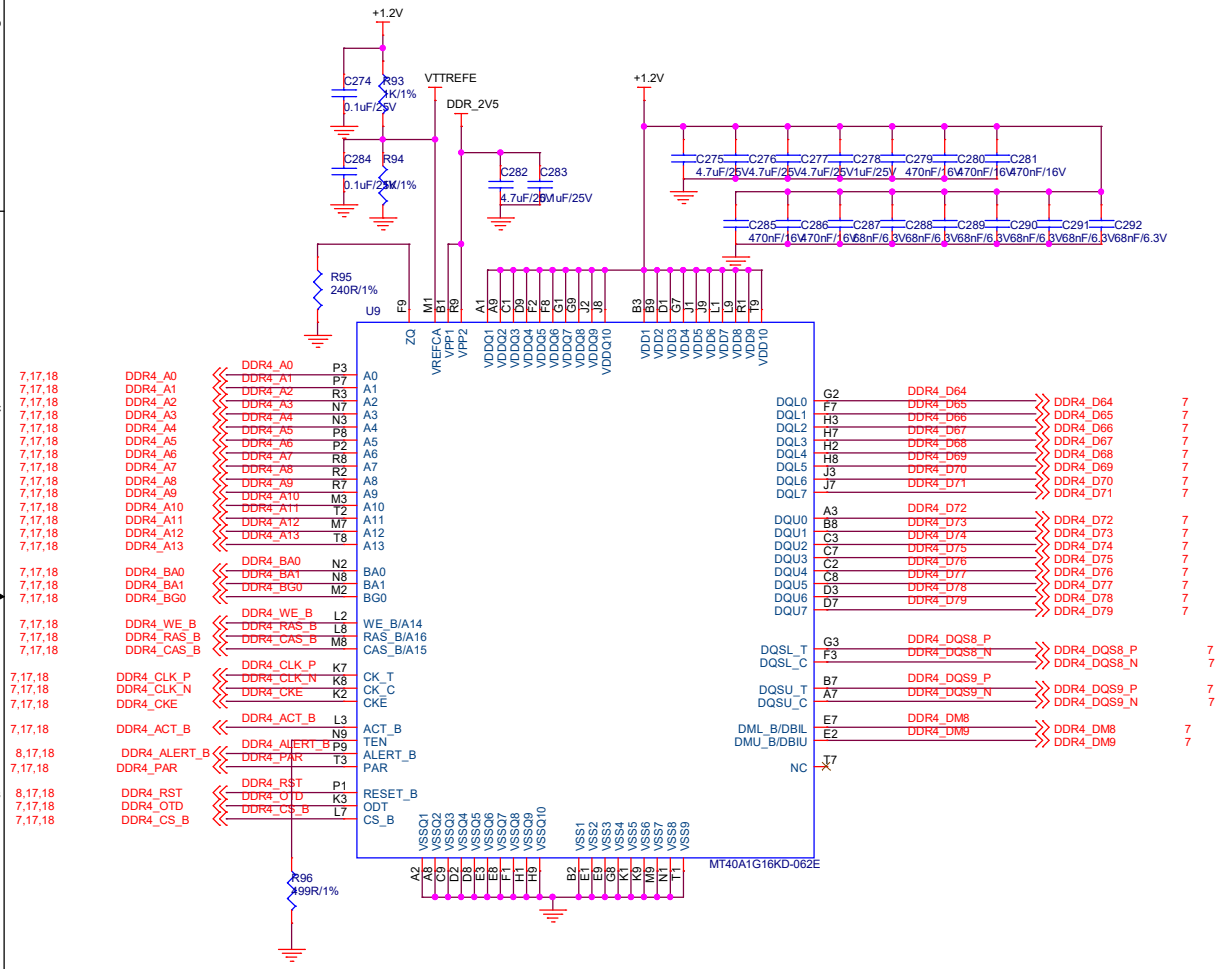

ALINX Confidential

ALINX	www.alinx.com	
Title	PAGE19 DDR4_3	
Size	Document Number ACKU15核心板 Schematics	Rev 1.0
Date: Wednesday, November 08, 2023	Sheet 19 of 23	

FPGA CONFIG SPI

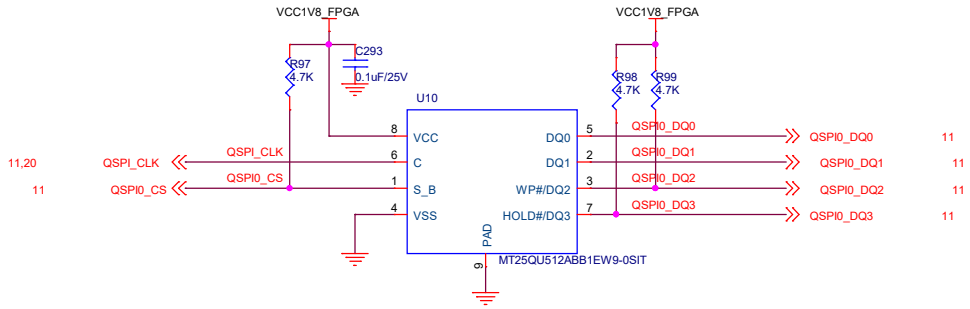

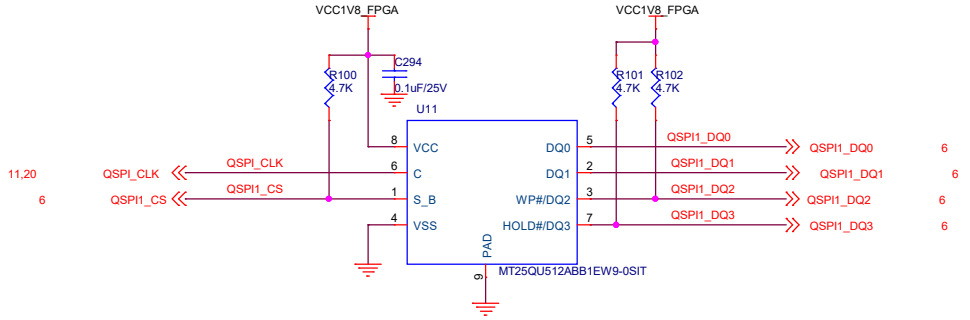

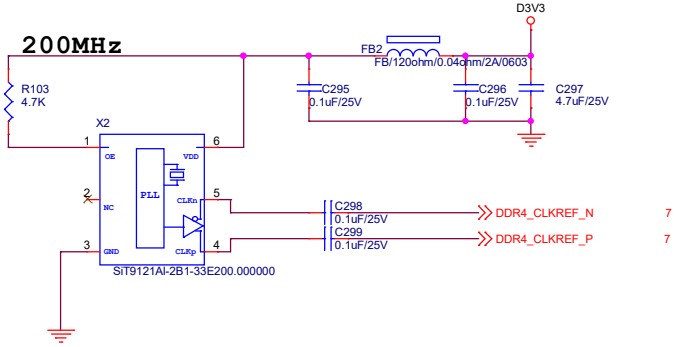

ALINX Http://www.alinx.com.cn

Title	PAGE20 QSPI_CLOCK	
Size	Document Number	Rev 1.0
Date: Wednesday, November 08, 2023	Sheet 20 of 23	

+12V POWER INPUT

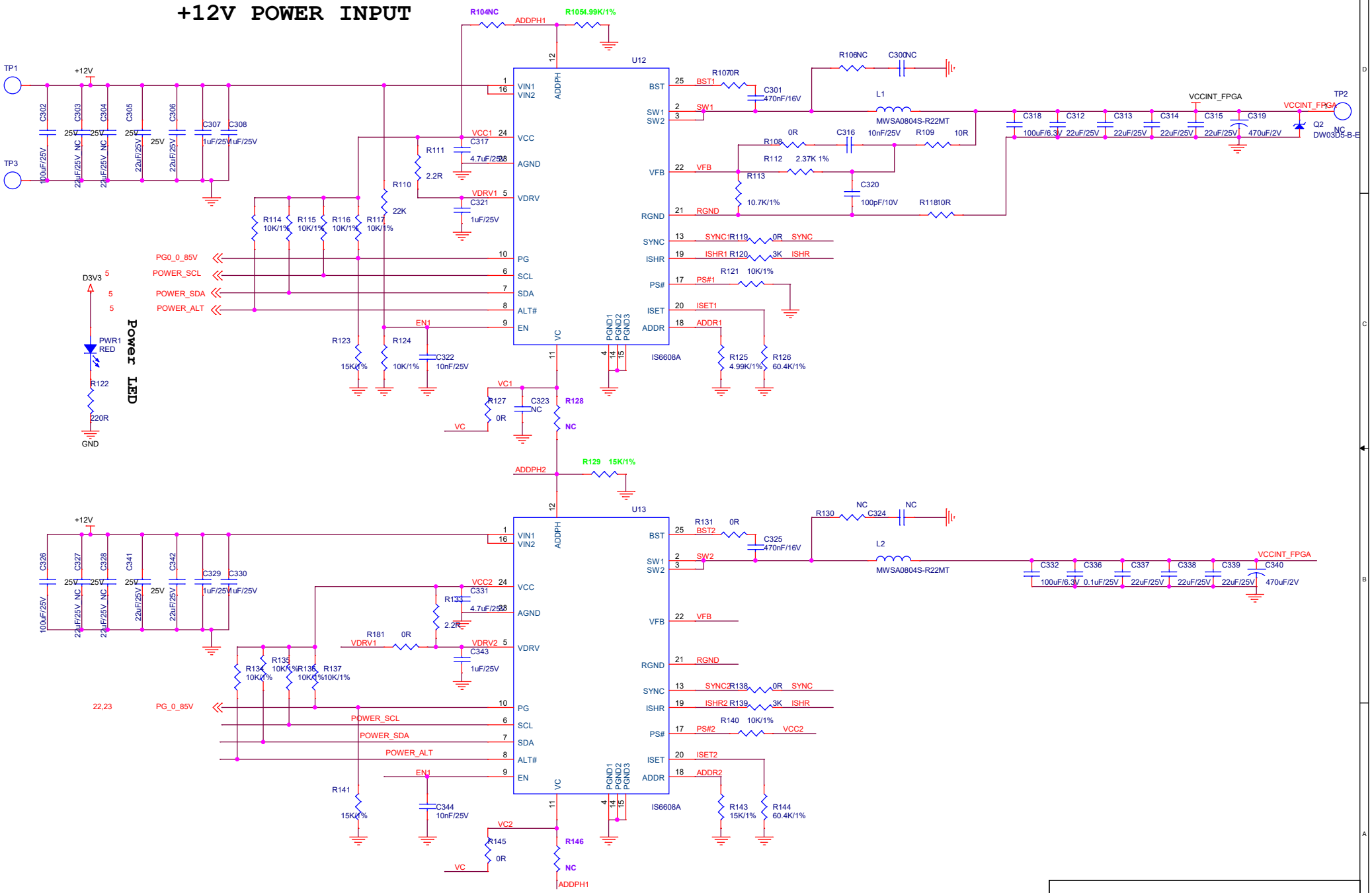

Title	PAGE21 POWER_VCCINT
Size	Document Number
Rev	1.0
Date:	Wednesday, November 08, 2023
Sheet	21 of 23

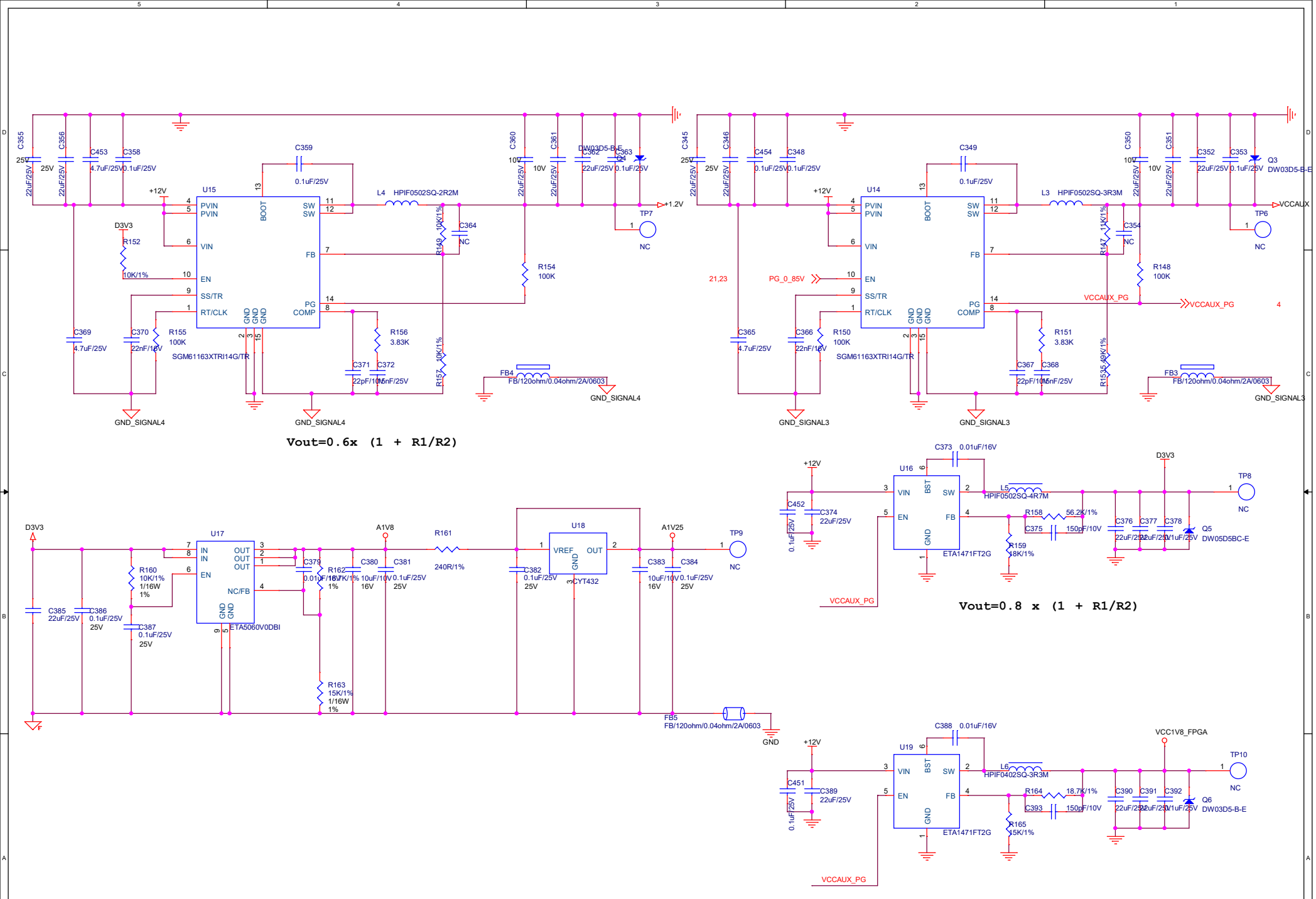

Title
PAGE22 POWER_VCCAUX_IO

Size	Document Number	Rev
		1.0

Date: Wednesday, November 08, 2023 Sheet 22 of 23

VCCINT>MGTAVCC(0.9V)>MGTAVTT(1.2V)

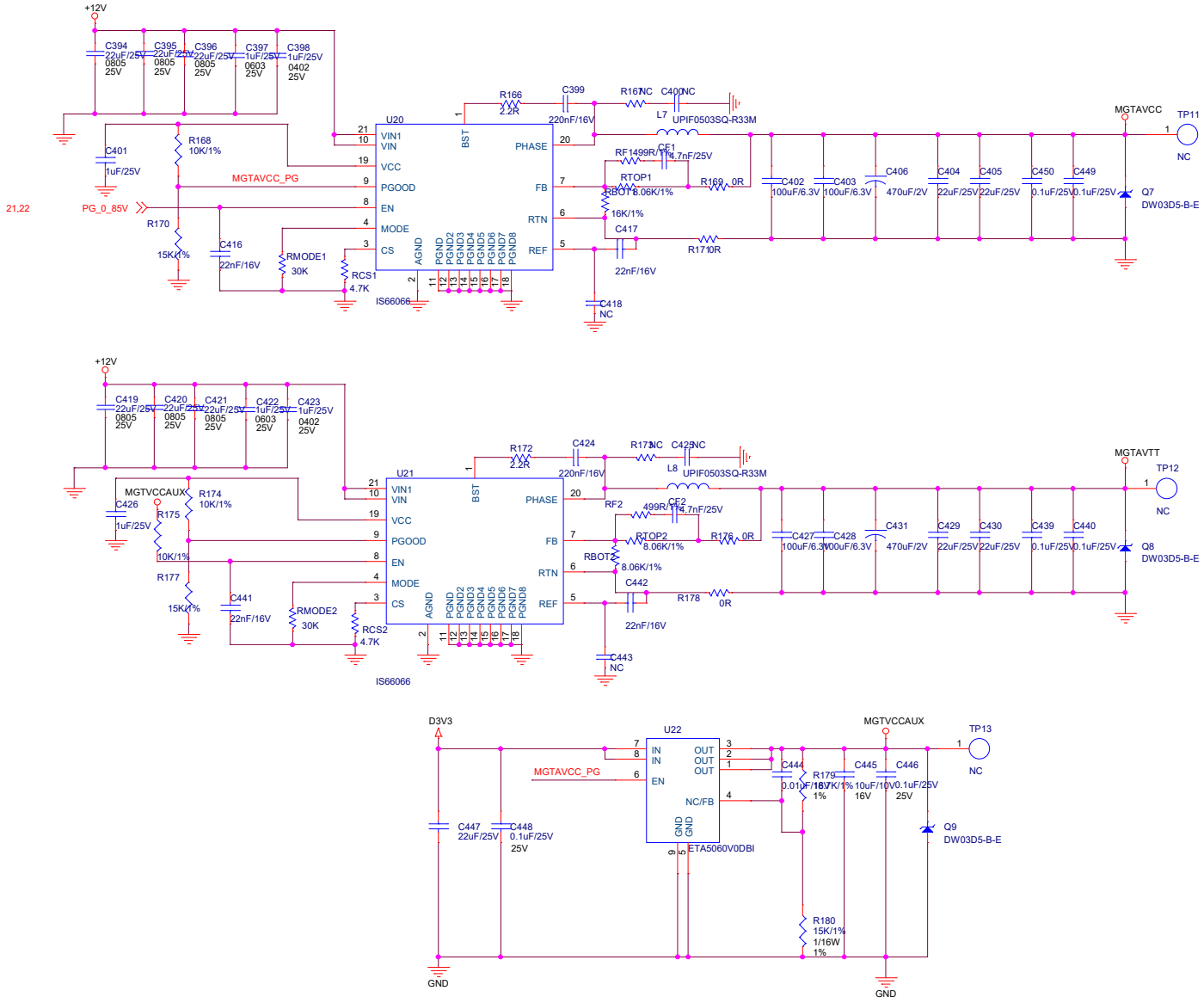

Title	PAGE23 POWER_MGT
Size	Document Number
Rev	1.0
Date:	Thursday, November 09, 2023
Sheet	23 of 23