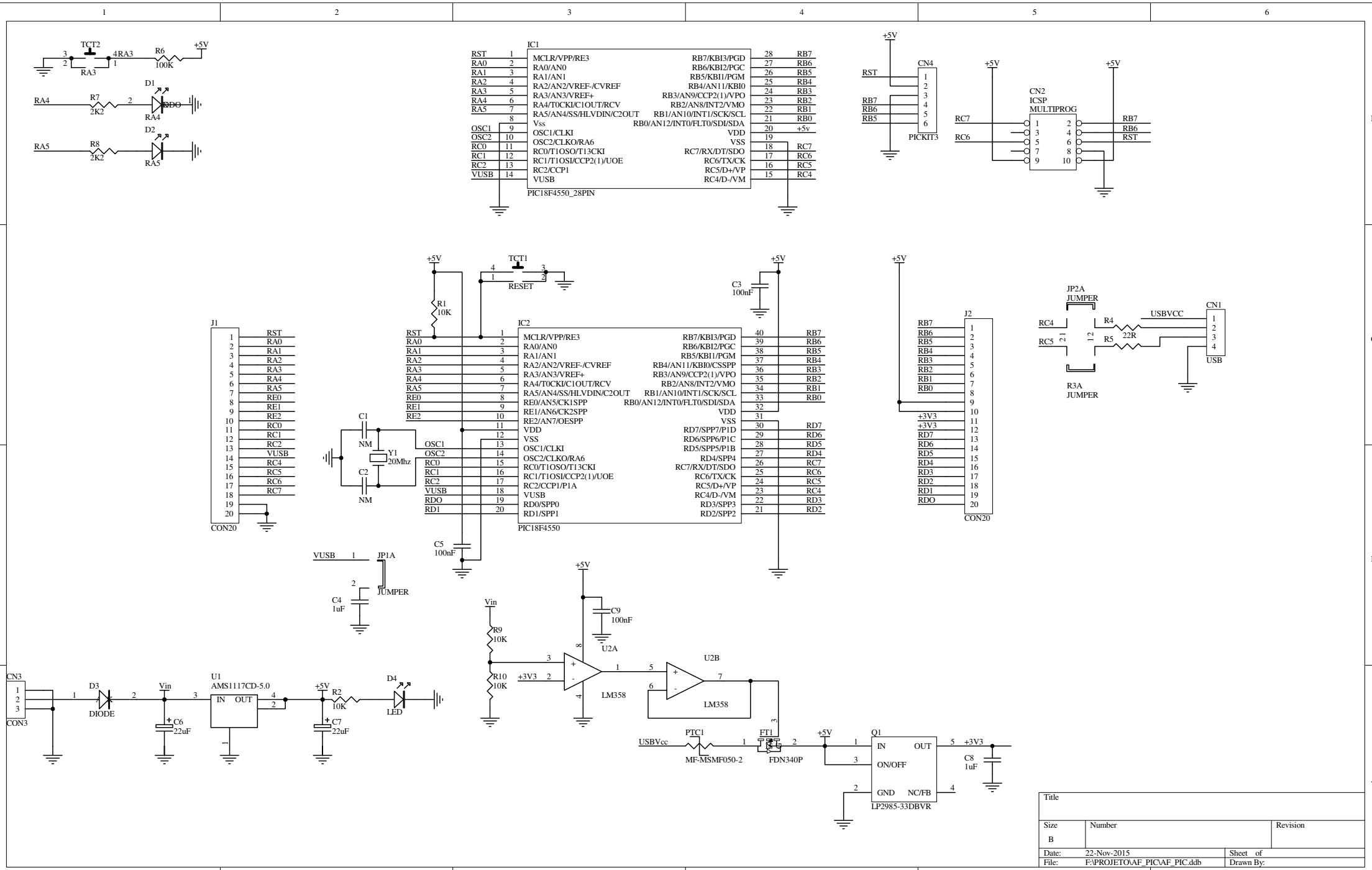
TCT2
RA3
4RA3
R6
100K
+5V
D1
RA4
R7
2K2
RDO
D2
RA5
R8
2K2
IC1
MCLR/VPP/RE3
RA0/AN0
RA1/AN1
RA2/AN2/VREF-/CVREF
RA3/AN3/VREF+
RA4/T0CKI/C1OUT/RCV
RA5/AN4/SS/HLVDIN/C2OUT
Vss
OSC1/CLKI
OSC2/CLKO/RA6
RC0/T1OSO/T13CKI
RC1/T1OSI/CCP2(1)/UOE
RC2/CCP1
VUSB
RB7/KBI3/PGD
RB6/KBI2/PGC
RB5/KBI1/PGM
RB4/AN11/KBI0
RB3/AN9/CCP2(1)/VPO
RB2/AN8/INT2/VMO
RB1/AN10/INT1/SCK/SCL
RB0/AN12/INT0/FLT0/SDI/SDA
VDD
VSS
RC7/RX/DT/SDO
RC6/TX/CK
RC5/D+/VP
RC4/D-/VM
PIC18F4550_28PIN
CN4
PICKIT3
CN2
ICSP
MULTIPROG
TCT1
RESET
R1
10K
C3
100nF
J1
CON20
IC2
PIC18F4550
C1
NM
C2
NM
Y1
20Mhz
C5
100nF
VUSB
JP1A
JUMPER
C4
1uF
J2
CON20
JP2A
JUMPER
R3A
JUMPER
CN1
USB
USBVCC
R4
22R
R5
Vin
R9
10K
R10
10K
C9
100nF
U2A
LM358
U2B
LM358
CN3
CON3
D3
DIODE
U1
AMS1117CD-5.0
IN
OUT
C6
22uF
R2
10K
C7
22uF
D4
LED
PTC1
MF-MSMF050-2
FT1
FDN340P
Q1
ON/OFF
GND
NC/FB
LP2985-33DBVR
C8
1uF
+3V3
Title
Size
B
Number
Revision
Date:
22-Nov-2015
Sheet of
File:
F:\PROJETO\AF_PIC\AF_PIC.ddb
Drawn By: