Voltage Control and PV Hosting Capacity of Distribution Networks

REPORT PREPARED FOR ENDEAVOUR ENERGY

January 2022

Amin Rajabi

Sean Elphick

APQRC AUSTRALIAN POWER QUALITY AND RELIABILITY CENTRE

UNIVERSITY OF WOLLONGONG AUSTRALIA

About This Report

Title: Voltage Control and PV Hosting Capacity of Distribution Networks

Authors: Amin Rajabi, Sean Elphick.

Reference: Rajabi A., Elphick S., (2022). Voltage Control and PV Hosting Capacity of Distribution Networks: Report prepared for Endeavour Energy, *Australian Power Quality and Reliability Centre*, University of Wollongong, Australia.

Disclaimer & Acknowledgement:

This report was prepared for Endeavour Energy as part of the Future Power Systems Research Position activities of the Australian Power Quality and Reliability Centre Agreement, and is not designed to be used for any other purpose. This report in its current format is provided for internal use only.

Table of Contents

1 List of Abbreviations 6
2 Introduction 7
3 Research Methodology 9
3.1 Industry and government publications 9
3.2 Technical papers 10
4 Impacts of Distributed PV on Distribution Networks 11
4.1 Background 11
4.2 Impact of PV generation on distribution networks 12
4.2.1 Voltage-related impacts 12
4.2.2 Overload effects 14
4.2.3 Reverse power flow impacts 14
4.2.4 System protection impacts 15
4.2.5 Other management issues for DNs 15
5 PV Hosting Capacity 16
5.1 Deciding on the use case 18
5.2 Performance indices 19
5.3 Hosting capacity quantification methods 20
5.3.1 Deterministic methods 21
5.3.2 Stochastic methods 21
5.3.3 Quasi-static time-series methods 22
5.3.4 Comparison of methods 23
5.3.5 Streamlined method 24
5.3.6 Iterative method 24
5.3.7 Hybrid-DRIVE method 25
5.4 Implementation considerations 25
5.5 Locational hosting capacity 25
6 Hosting Capacity Enhancement Strategies 27
6.1 Conventional approaches 27
6.1.1 Reconductoring and network reinforcement 27
6.1.2 On-load tap changer at the zone substation 27
6.1.3 Off-load tap changers 28
6.1.4 Capacitor banks 28
6.2 Emerging techniques 28
6.2.1 Control of PV inverters 28
6.2.2 Distributed energy storage systems 29
6.2.3 Low voltage regulators 29
6.2.4 FACTS devices 30

6.3 Other approaches ... 32
6.3.1 Network reconfiguration ... 32
6.3.2 Conservation voltage reduction ... 32
6.3.3 Harmonic reduction ... 32
6.3.4 Flexible interconnections ... 32
6.4 Advanced network management approaches ... 32
6.5 Existing practices ... 33
7 Advanced control of smart inverters and related challenges ... 35
7.1 Smart inverter functions ... 35
7.1.1 Active/ reactive power priority mode ... 36
7.1.2 Volt/VAr function with hysteresis ... 37
7.1.3 Dynamic reactive current function ... 37
7.1.4 Advanced methods for voltage control using smart inverters ... 37
7.2 Advantages of using smart inverters ... 38
7.3 Challenges of using PV inverters ... 38
7.4 Dynamic settings for smart inverters ... 41
8 Other Discussions on Active Grid Voltage Management ... 43
8.1 Voltage Control schemes ... 43
8.2 Voltage control objectives ... 44
8.3 Measurement-based (data-driven) methods for voltage control ... 44
8.4 Coordinated voltage control between TNSPs and DNSPs ... 45
8.5 Impact of high PV penetration on operation of voltage regulators ... 46
9 International Projects on Hosting Capacity ... 47
9.1 Hawaiian Projects ... 47
9.1.1 Background ... 47
9.1.2 Project specifications ... 47
9.1.3 Main results ... 47
9.2 Pacific Gas and Electric Company Studies ... 48
9.2.1 Background ... 48
9.2.2 Main results ... 48
10 Australian Projects on Hosting Capacity ... 49
10.1 Distributed energy resources hosting capacity study by CitiPower and Powercor [10] [70] ... 50
10.1.1 Project description ... 50
10.1.2 Main results ... 52
10.1.3 Further observations from this project ... 52
10.2 Advanced planning of PV-rich distribution networks by the University of Melbourne [122] [17] [18] [123] [124] ... 54
10.2.1 Background ... 54
10.2.2 Project description ... 54

10.2.3 Main results ... 56
10.2.4 Further observations from this project ... 58
10.3 Demonstration of three dynamic grid-side technologies by Jemena and AusNet [125] [126] ... 58
10.3.1 Background ... 58
10.3.2 Project specifications ... 59
10.3.3 Main Results ... 61
10.3.4 Further observations from this project ... 61
10.4 Distributed energy resources feasibility study by Dynamic Limits [93] ... 61
10.4.1 Background ... 61
10.4.2 Main Specifications of the project ... 62
10.4.3 Key components of the control scheme ... 62
10.4.4 Main results ... 63
10.4.5 Further observations from this project ... 63
10.5 Evolve Project: On the calculation and use of dynamic operating envelopes [129] ... 63
10.5.1 Background ... 63
10.5.2 Project description ... 63
10.5.3 Results ... 65
10.5.4 Further observations from this project ... 65
10.6 Solar Enablement Initiative [130] [131] ... 66
10.7 Other projects ... 67
11 AER Guidelines on Determining Customer Export Curtailment Value ... 69
11.1 Background ... 69
11.2 presentation of business case ... 69
11.2.1 DER integration strategy ... 69
11.2.2 Format of the business case ... 69
11.2.3 Input assumptions ... 70
11.2.4 Options analysis ... 70
11.3 Hosting Capacity Analysis ... 70
11.4 Value of DER methodology ... 70
12 Conclusions ... 73
12.1 Summary of project accomplishments ... 73
12.2 Future directions for expanding this study ... 74
13 References ... 76
14 Appendix ... 82
14.1 A list of useful references ... 82

1 List of Abbreviations

Term	Definition
AMI	Advanced Metering Infrastructure
BESS	Battery Energy Storage System
Capex	Capital Expenditures
CECV	Customer Export Curtailment Value
CPPAL	CitiPower and Powercor
CVR	Conservation Voltage Reduction
DER	Distributed Energy Resources
DG	Distributed Generation
DMS	Distribution Management System
DN	Distribution Network
DNSP	Distribution Network Service Provider
DOE	Dynamic Operating Envelopes
DR	Demand Response
DSS	Distribution Substation
D-STATCOM	Distributed Static Compensator
DVR	Dynamic Voltage Restorer
ESS	Energy Storage System
EV	Electric Vehicle
FACTS	Flexible AC Transmission System
FCAS	Frequency Control Ancillary Services
HC	Hosting Capacity
LRMC	Long-Run Marginal Costs
LTC	Load Tap Changer
LVR	Low Voltage Regulator
MC	Monte-Carlo
NEM	National Electricity Market
NREL	National Renewable Energy Laboratory
Opex	Operating Expenses
PDF	Probability Distribution Function
PMU	Phasor Measurement Unit
PVHC	PV Hosting Capacity
QSTS	Quasi-Static Time Series
TN	Transmission Network
TNSP	Transmission Network Service Provider
SoC	State of Charge
SRMC	Short-Run Marginal Costs
UPFC	Unified Power Flow Controller
VaDER	Value of DER
VPP	Virtual Power Plant
VR	Voltage Regulator
VSG	Virtual Synchronous Generator
ZSS	Zone Substation

2 Introduction

The Australian electricity supply sector has been experiencing significant changes over the last two decades. Australia is one of the leading countries in the world for the adoption of renewable energy, standing fifth in the world for renewable power capacity per capita (not including hydropower) [1]. In particular, the uptake of photovoltaic (PV) panels by residential dwellings has significantly increased the share of solar generation. During 2019, 3.7 GW of new PV capacity was added in Australia, bringing the total capacity to 14.7 GW and the share of solar generation to 7.8 % of total generation [1]. Around 2.6 million households are equipped with small scale generation and household battery capacity is now more than 1 GWh. Wind power generation was the largest source of renewable generation in 2019 accounting for 8.5 % of Australian electricity generation. In states such as South Australia, Victoria, and New South Wales, the share of wind power generation is far higher - between 20-30 % of annual generation.

It is forecasted that by 2027 over 40% of Australian electricity customers will use an on-site distributed energy resource (DER) [2]. This is comprised of 29 GW of PV and 34 GWh of behind-the-meter battery energy storage.

These rapid changes in generation mix have introduced challenges and opportunities for Australian distribution and transmission network service providers (NSPs). Stability problems, PV hosting capacity (HC), voltage management, and network upgrades are examples of these challenges. Opportunities include enhanced demand management, implementation of fringe of grid and off-grid networks, local control of active and reactive power and deferral of network augmentation.

In recent years, various demonstrations and trial projects such as demand response (DR) programs, virtual power plants (VPPs), microgrids, and blockchain energy trading have been implemented across Australia to embrace novel technologies and trail new approaches for network management. In addition, a wide range of policies, programs and initiatives have been introduced by the federal government and other jurisdictions to promote clean energy and the use of newer technologies in the Australian grid [3].

This report is dedicated to voltage management of distribution networks (DNs), PV hosting capacity (PVHC) and a review of relevant international and Australian projects investigating voltage management and PVHC. The main goal is to review the key features and progresses in the international as well as Australian power systems and identify important areas which can improve network management. The report is structured as follows.

- Section 3 explains the research methodology which has been followed for the selection of related industry and academic studies. A wide range of documents from different organisations and companies and various technical papers were used in the preparation of this report.
- Section 4 reviews the impact of distributed solar PV generation on DNs.
- Section 5 discusses the main HC concepts, HC quantification methods, and HC analysis implementation considerations.
- Section 6 explains the main traditional and novel approaches for HC enhancement.
- Section 7 is dedicated to detailed discussions about smart inverters including different static and dynamic settings for inverters, and the challenges associated with smart inverters.
- Section 8 covers more advanced methods for voltage regulation of DNs such as voltage control schemes, coordinated voltage control between the NSP and customer’s devices, and data-driven approaches for voltage control.

- Sections 9 and 10 review several international and Australian projects on hosting capacity assessment and enhancement and discuss their main features and outcomes.
- Section 11 briefly covers the recently published requirements and guidelines by the Australian Energy Regulator (AER) for conducting HC studies.
- Section 12 presents the conclusions and research gaps.

3 Research Methodology

In this section, the methodology for conducting this literature review is explained. The literature review has been completed by investigating the following sources:

- Academic outputs
- Industry outputs such as white papers or application guides
- Regulatory position papers and publications from government and other agencies
- Any other relevant sources in the public domain

3.1 INDUSTRY AND GOVERNMENT PUBLICATIONS

To have a reasonable understanding of the state-of-the-art with respect to future power systems in the Australian context and to ensure that the literature review is as comprehensive as possible, the following industrial and government websites were explored thoroughly, and the relevant publications were selected and sorted based on the subject matter. The procedure implemented is shown in Fig. 3-1.

Fig. 3-1 The procedure for selection of industry outputs

The created database made it easy for the next steps which required a broad understanding of the current situation of Australian networks as well as summarizing and reporting the outcomes.

The list of websites and the number of publications that were selected from each are shown in Table 3-1.

Table 3-1 Selected industry publications

Name of organisation/Company	No. of selected Publications
Governmental/Councils/Organisations	
Australian Energy Market Commission (AEMC)	17
Australian Energy Market Operator (AEMO)	26
Australian Energy Regulator (AER)	12
Australian Renewable Energy Agency (ARENA)	148
Clean Energy Council	4
Council of Australian Governments (COAG) Energy Council	8
Commonwealth Scientific and Industrial Research Organisation (CSIRO)	36
Energy Networks Australia (ENA)	10
Smart Energy Council	4
Australian Distribution Network Service Providers (DNSPs)	
NSW DNSPs: Ausgrid and Endeavour Energy	13
QLD DNSPs: Energex and Ergon	6
WA DNSPs: Western Power and Horizon Power	6
VIC DNSPs: United Energy and Citipower and Powercor	7
International resources	
National Renewable Energy Laboratory (NREL)	28
Electric Power Research Institute (EPRI)	7
Miscellaneous	
Other relevant documents	17
Total	338

3.2 TECHNICAL PAPERS

The guidelines proposed by Kitchenham et al. [4] [5] were adopted for the selection of the research papers and accomplishing the literature review as shown in Fig. 3-2.

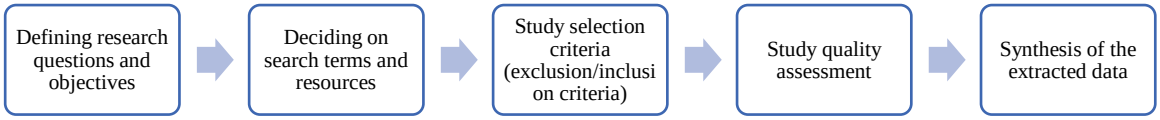

Fig. 3-2 Systematic literature review process

The "Web of Science" database was used for searching for relevant publications. Based on the defined "search queries" and "exclusion" and "inclusion" criteria, different studies from a variety of publishers such as IEEE, Elsevier and Springer were selected.

Since studies on the selected topics (including tens of thousands of publications) address a wide range of problems (e.g. technologies, business models, planning and operation) it would be impossible to explore each of these areas in detail. Therefore, publications were effectively assessed and sorted based on the publication date, title, abstract and conclusion and a quick review of the paper contents. In the next step, those publications providing insights by reporting and summarizing current practices, challenges, trends, testbeds, prototypes and other similar themes were considered for further analysis and review.

4 Impacts of Distributed PV on Distribution Networks

4.1 BACKGROUND

Low voltage DNs were constructed many years ago with mostly radial topology and designed for unidirectional power flow from the substation to end customers. All voltage regulating devices including transformer on-load and off-load tap changers (LTCs), capacitors and line voltage regulators (LVRs) operate based on this philosophy to provide customers, especially those at the end of feeders, with acceptable voltage levels.

Introduction of distributed energy resources (DERs), mainly solar PV generation, has altered the traditional operating behaviour of DNs. Fig. 4-1 shows the annual PV installations in Australia from 2009 to 2021[6].

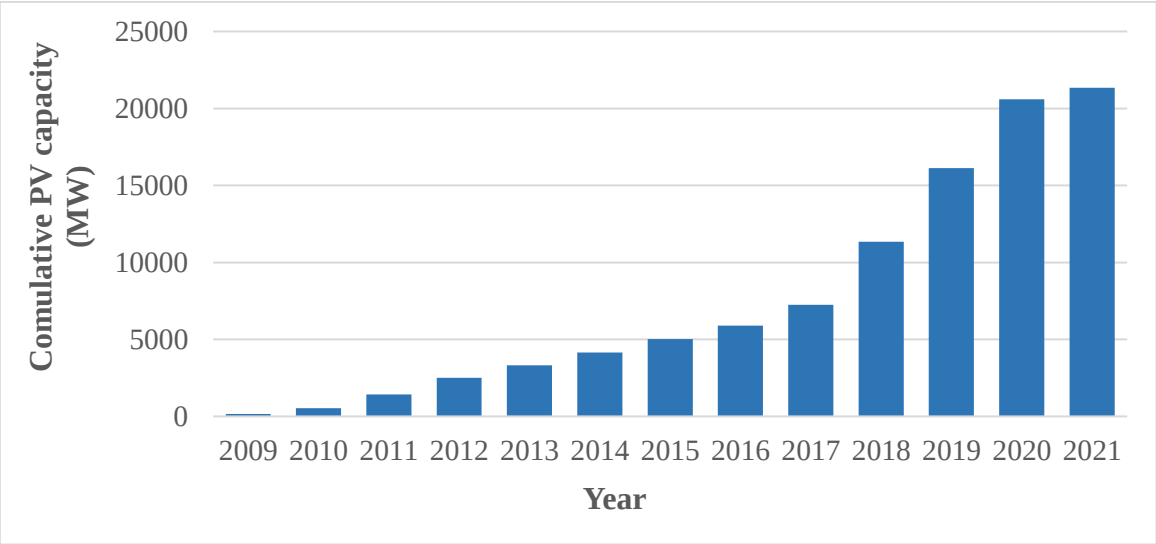

Fig. 4-1 Annual PV installations in Australia [6]

Fig. 4-2 displays the percentage of residential buildings equipped with PV systems across Australia on a state by state basis [7].

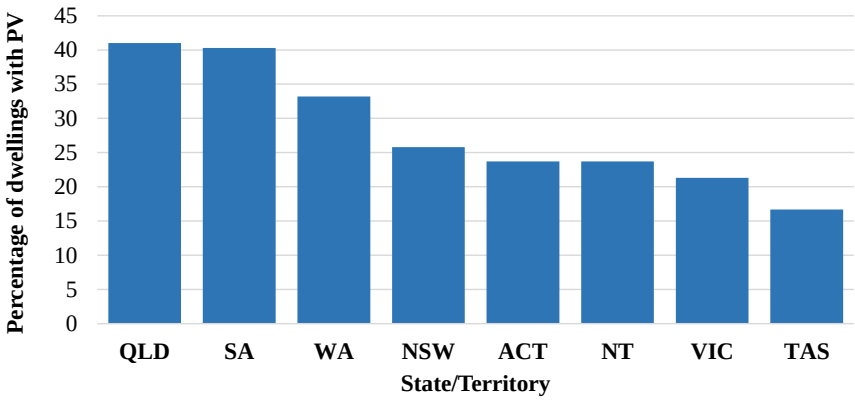

Fig. 4-2 Percentage of dwellings with a PV system by state/territory [7]

Such high levels of PV penetration affects the operation of distribution networks and can cause serious problems in terms of voltage management, reverse power flows, overloading feeders and transformers, and the operation of voltage management control in the network [8] [9]. Other issues

such as reduced power quality, involuntary PV curtailment and delaying or refusing PV connections by DNSPs are also among the concerns [10].

Therefore, DNSPs around the world are seeking innovative approaches to accommodate the highest amount of distributed PV in their networks while keeping the adverse effects to a minimum. These include novel proposals for voltage management using the coordination of traditional and newer technologies. In addition, DNSPs need to study the impact of PV installations on the network and estimate the maximum amount of PV that can be allowed on distribution feeders. In the following sections, some of the well-known problems of DNs caused by the increasing PV levels are briefly reviewed.

4.2 IMPACT OF PV GENERATION ON DISTRIBUTION NETWORKS

4.2.1 Voltage-related impacts

Voltage rise: voltage rise is presently considered to be the main adverse effect of PVs on DNs. In particular, the power injected by PV generators can lead to overvoltage at the end of long feeders. This is in contrast with traditional DNs that usually experience voltage drop at the end of feeders and try to keep the voltage at its acceptable range using on-load and off-load tap changers, LVRs and capacitor banks.

Fig. 4-3 and Fig. 4-4 demonstrate the effect of installed PV on a simple DN [11].

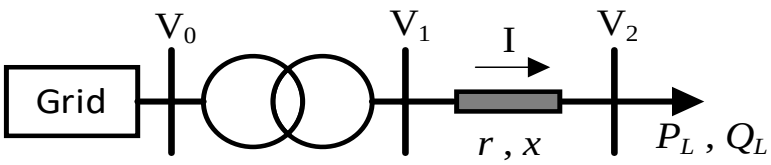

Fig. 4-3 Voltage drop in a distribution system

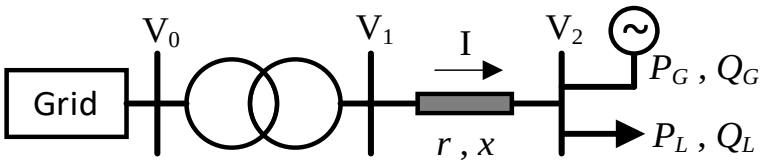

Fig. 4-4 Distribution system with load and renewable generation

According to Fig. 4-3, the voltage drop across the feeder can be written as:

$$\Delta \boldsymbol{U} = \boldsymbol{V_1} - \boldsymbol{V_2} = \boldsymbol{I}(r + jx) = \Delta \boldsymbol{V_{re}} + \Delta \boldsymbol{V_{rm}}$$

DN feeders have a higher R/X ratio compared with transmission networks which makes the voltage magnitude more sensitive to active power than reactive power [9]. Therefore, the imaginary part in the above equation is small and the voltage phase difference between two adjacent nodes can be also neglected. Therefore, the voltage drop can be simplified as follows:

$$|\Delta \boldsymbol{V}| \approx |\Delta \boldsymbol{V_{re}}| = \frac{r.P_L + x.Q_L}{|\boldsymbol{V_2}|}$$

When a DER installed at node 2, the voltage equation takes the form of:

$$|\Delta \boldsymbol{V}| \approx \frac{r(P_L - P_G) + x(Q_L - Q_G)}{|\boldsymbol{V_2}|}$$

This simple example shows the effect of active and reactive power injection on the voltage magnitude and the voltage drop along the feeder. If the active power produced by DER is higher than the load at node 2, it can cause voltage rise at the end of the feeder and the increased voltage may violate the voltage limits. The complete relationship depends on the R/X ratio and the amount of active and reactive power production by the DER.

Grid codes specify different voltage limits for LV networks. For example, in Australia, the voltage must remain within $-6\%/+10\%$ of the nominal level of 230 Volts at the point of connection between the LV installation and the DN. Table 4-1 shows some of the defined limits in standards [12].

Table 4-1 Voltage limits in different standards [12]

Standards	Limit	Remarks
EN 50160 Voltage characteristics of electricity supplied by public distribution systems	Low Voltage: ±10% (0.9 pu to 1.1pu) for 95% of week, mean 10 min RMS values	▪ Defined for voltage magnitude variation, not to be confused with rapid voltage changes or voltage dip ▪ LV means the RMS value not exceeding 1000 ▪ Limits as percentages of nominal voltage (1pu)
ANSI Standard. C84.1 Electric power systems and equipment-voltage ratings	Range A: ±5% (0.95 pu to 1.05 pu) Range B: 91.7% for minimum voltage (0.91 pu), 105.8% for maximum voltage	▪ Range A is optimal voltage range ▪ Range B is acceptable but not optimal ▪ The nominal voltage range is between 120 and 600 V
IEC 60038 Voltage Standard	Low Voltage: ±10% for the nominal voltage of 230/400 V	

Voltage unbalance: Voltage unbalance can generally result from either structural causes such as non-transposed lines and unequal feeder impedances or operational problems such as unbalanced loading on different phases [12]. The adverse effects of voltage unbalance are the overheating of motors, transformers, and customer devices, vibration of motors, and thermal ageing of equipment. Voltage unbalance can be characterised in different ways. The most common approach in standards (for example, used by IEEE 1159 and EN standard 50160) is to define the voltage unbalance as the ratio of negative sequence component of the voltage to the positive sequence component.

Table 4-2 shows some of the voltage unbalance indices in different standards [12].

PV installation in DNs can exacerbate voltage unbalance [13] [14] [15]. The location and phase of PVs and the feeder characteristics determine the extent of this impact.

Voltage fluctuations: The generation of intermittent renewable resources such as PVs are affected by weather conditions such as the amount of radiation or cloud cover variations. This can result in voltage fluctuations [16].

Table 4-2 Voltage unbalance indices in different standards [12]

Standard	Indices definition	Limits
IEEE Standard 112™-2017: IEEE Standard Test Procedure for Poly-phase Induction Motors and Generators	$PVUR_{IEEE112}\% = \frac{max\ deviation\ from\ mean\ of\ \{V_{an}, V_{bn}, V_{cn}\}}{mean\ of\ \{V_{an}, V_{bn}, V_{cn}\}} \times 100$	Where, V_{an}, V_{bn}, V_{cn} are the phase to neutral voltages. Limit 0.5%
IEEE Standard 1159™_2009: IEEE Recommended Practice for Monitoring Electric Power Quality	$VU_{TD} = \frac{Negative\ sequence\ voltage\ (V_-)}{Positive\ sequence\ voltage\ (V_+)} \times 100$	Where, V_- and V_+ are negative and positive sequence voltages respectively. Limit 2%
ANSI C84.1_2011 (NEMA): The American National Standard for Electric Power Systems and Equipment	$LVUR\% = \frac{max\ deviation\ from\ mean\ of\ \{V_{ab}, V_{bc}, V_{ca}\}}{mean\ of\ \{V_{ab}, V_{bc}, V_{ca}\}} \times 100$	Where, V_{ab}, V_{bc}, V_{ca} are phase to phase voltages. Limit 3%
IEC/TR6100-3-14(-13-15)	$VUR\% = \xi_h^U = \frac{\lvert\vec{U}_h^2\rvert}{\lvert\vec{U}_h^1\rvert} \times 100$	Where, $\vec{U}_h^2$ and $\vec{U}_h^1$ are negative and positive sequences respectively. h is the harmonic order. Limit: below 2% (99 percentile of weekly measurements for very short 3 s intervals)
EN 50160: Voltage Characteristics in Public Distribution Systems	$VUR\% = \frac{V_{neg}}{V_{pos}} \times 100$	Where V_{neg} and V_{pos} are negative and positive sequence voltage components. Limit: below 2% (95 percentile of the weekly measurement for short intervals 10 min)
CIGRE	$VUR\% = \sqrt{\frac{1-\sqrt{3-6\beta}}{1+\sqrt{3-6\beta}}} \times 100$ where $\beta = \frac{\lvert V_{AB}\rvert^4 + \lvert V_{BC}\rvert^4 + \lvert V_{CA}\rvert^4}{(\lvert V_{AB}\rvert^2 + \lvert V_{BC}\rvert^2 + \lvert V_{CA}\rvert^2)^2}$	Where V_{AB}, V_{BC}, V_{CA} are the phase to phase voltages.

4.2.2 Overload effects

High PV generation can cause possible overloads of feeders and transformers. The location of PV can have a significant impact on loadings of different parts of the feeder. In particular, this can be a major problem during periods with light loads and high solar PV production [13] [17] [18].

Masked load is another important issue that should be considered for the operation and planning of systems with high PV penetrations. Masked load refers to the load that is hidden from upstream components due to the PV production [16]. The total native load (without PV) of the feeder/transformer can be much higher compared to the measured load (with PV production). Therefore, significant overloads might occur if PV generation disconnects unexpectedly.

Cold load pickup, which refers to energising the feeder after a long outage, can also cause overload issues on the feeder. Due to loss of load diversity, cold load pickup can result in high current levels which can be exacerbated if PV systems are not reconnected back automatically.

4.2.3 Reverse power flow impacts

DNs are traditionally designed for unidirectional power flow from the upstream grid to customer loads. LVRs can correct the voltage drop by adjusting their taps. LVRs operating in constant-voltage

mode are able to decrease the voltage rise caused by DER to a certain point. However, the voltage rise at the PV connection point can increase and violate the voltage limits if the number of taps is not sufficient to accommodate the voltage rise or the set-point is decided based on the assumption of unidirectional power flow where there is a distance between the DER and LVR. For the cases when LVR acts in the line-drop compensation mode, the situation can be worse since the LVR will increase the voltage rise at the secondary side [9].

4.2.4 System protection impacts

PVs can change the fault current levels of the network and also necessitate reviewing of network protection coordination [16].

4.2.5 Other management issues for DNs

The share of EV fleet in distribution networks is anticipated to increase significantly over the next decades. While this is not currently an urgent problem for DNSPs, possible scenarios for EV adoption and management need to be considered for the future planning and management of networks. If uncontrolled, EVs charging could significantly change the shape of load patterns in the network and potentially cause serious voltage drops and overloads in DNs. In this regard, developing comprehensive approaches which model the effect of PVs, storage units and EVs is necessary.

5 PV Hosting Capacity

Hosting capacity (HC) is generally referred to as the amount of DERs that can be integrated into the network, without imposing any changes to the existing system before any violation in network performance indices occur [19] [20]. For DNs, HC is mostly used for the assessment of PV levels that can be installed on a distribution feeder that causes the first violation of the operating indices.

Various factors affect the amount of DER that can be hosted on the DN including the DER location, load curve of the feeder, feeder characteristics and DER technology [21]. A statistical examination of 16 distribution feeders by NERL shows the most significant parameters are [19]:

- Feeder primary voltage
- Feeder maximum load in megawatts
- Farthest customer distance from substation
- Load-weighted average of primary X/R
- Sum of regulator and capacitor counts
- Total reactive power rating of capacitors

However, since LV feeder characteristics differ vastly, more comprehensive studies are required to understand the effect of such parameters on HC.

Some recent studies analysed a large number of feeders and used sensitivity studies to determine the effect of different parameters on HC levels, for example [13], which evaluates the impact of some key factors including PV power factor, circuit conductor parameters and voltage magnitude of the system on PV HC.

The study presented in [22] follows a different approach by using data mining techniques to automatically identify those DNs that can better accommodate DGs. A large number of features including grid features, graph features, and simulation features are defined. Grid features include the sum of rated transformer powers and the proportion of intermeshing in a DN. Graph features are defined based on the structure of the grid. The features are extracted for 300 rural and suburban LV grids and used to train a support vector machine (SVM) classifier. The results give suggestions on the most important features affecting the ability of a grid to host more DGs.

HC quantification and HC enhancement are important issues for DNSPs. PV HC studies are usually undertaken for a range of probable scenarios of loads, PV locations and PV sizes and the minimum amount is selected as the PV HC. The steps for performing a HC study are shown in Fig. 5-1 and illustrated in Sections 5.1 to 5.4.

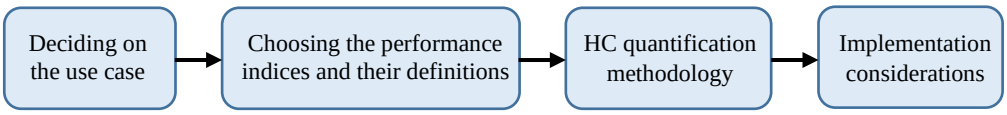

Fig. 5-1 Hosting capacity assessment procedure

HC enhancements strategies are usually decided based on the HC studies. HC enhancement can be achieved through various solutions including those techniques that are explained in Section 6. As shown in Fig. 5-2, higher levels of distributed generation can be accommodated into the system by using HC enhancement methods.

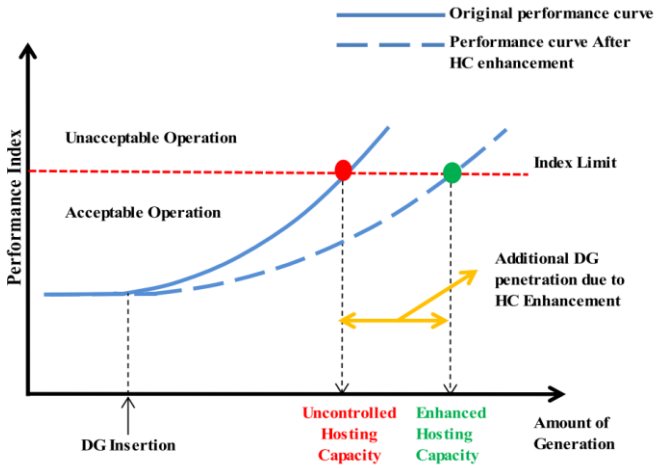

Fig. 5-2 HC concept and HC enhancement impact [20]

Fig. 5-3 shows a sample combined HC assessment and enhancement procedure.

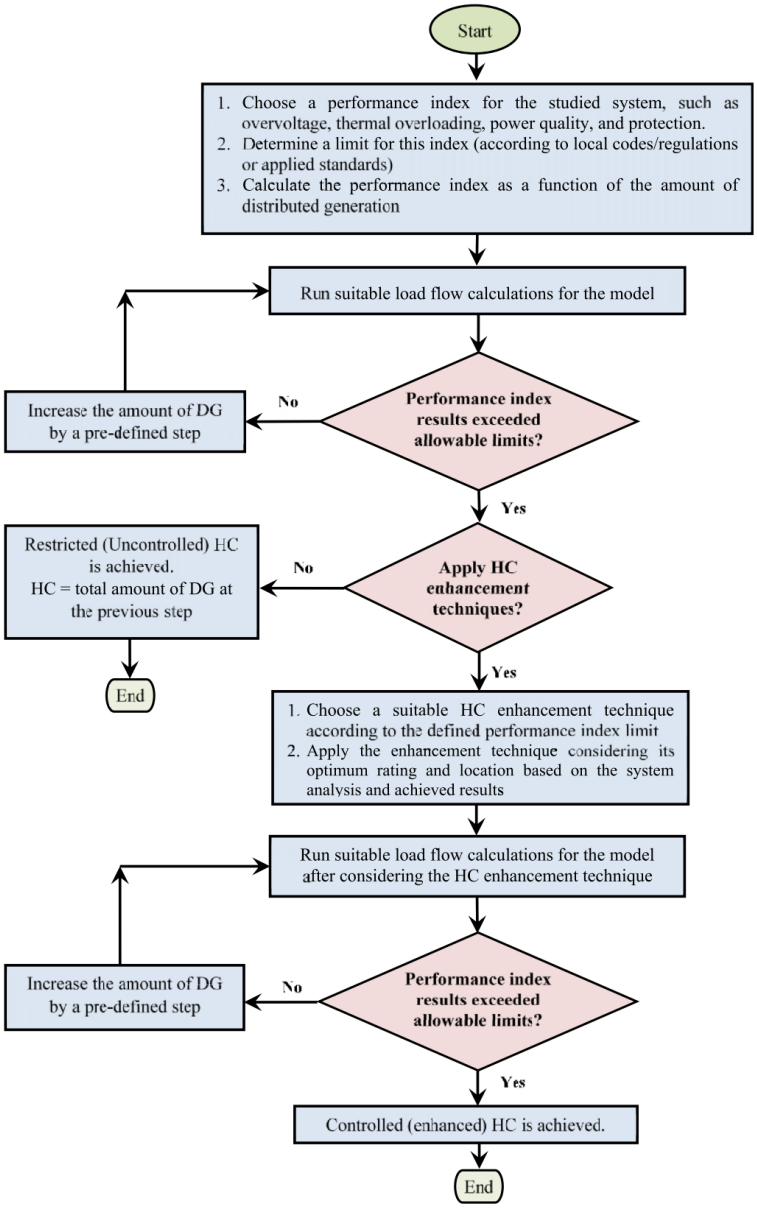

Fig. 5-3 HC assessment and enhancement procedure [20]

In the following sections, the most important concepts related to PV HC studies are explained.

5.1 DECIDING ON THE USE CASE

HC analysis involves different challenges and is undertaken for several different purposes. Some of the main aspects are summarized in this section [21] [23].

i) **Purpose of study:** There are two main reasons to undertake a HC analysis: streamlining DER connections and robust DN planning. Fig. 5-4 and Fig. 5-5 show the processes for these two use cases [21].

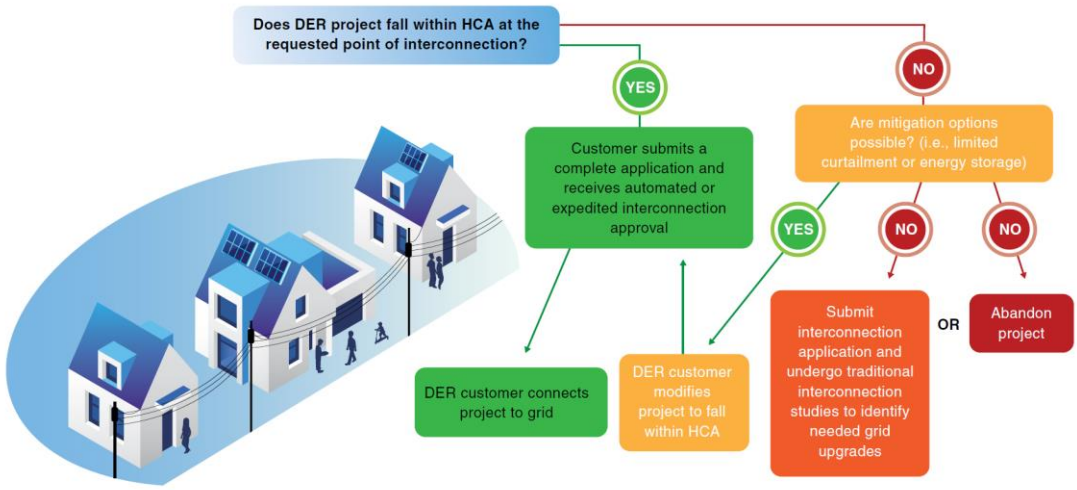

Fig. 5-4 DER connection use case for HC analysis [21]

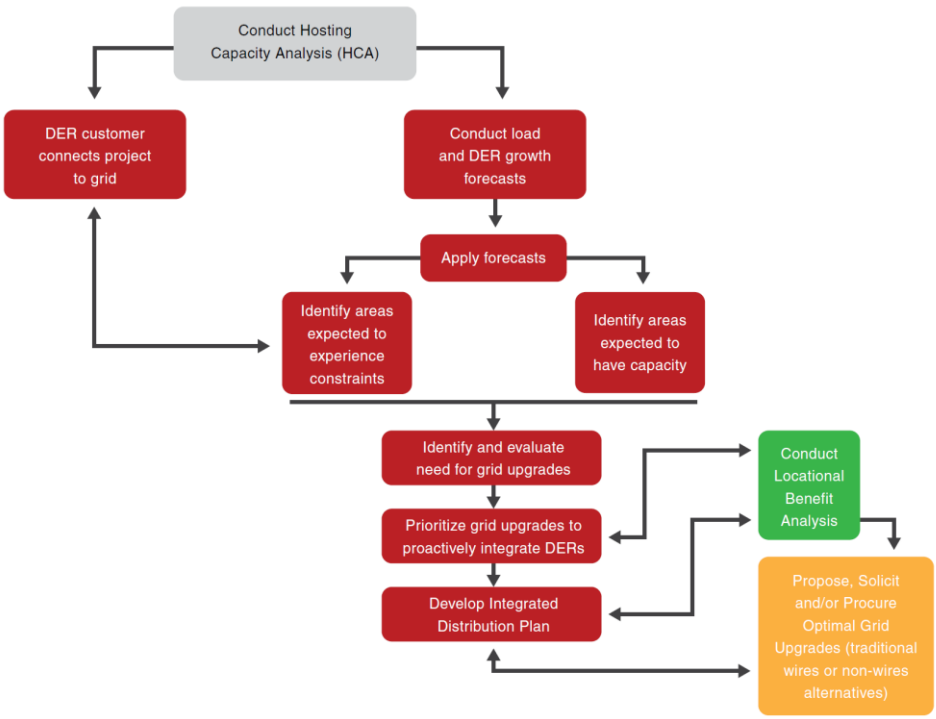

Fig. 5-5 Planning use case for HC analysis [21]

Providing information to investors about the network condition and locational value of DERs is another purpose of HC studies. Identifying the intended use determines the level of accuracy which is needed for the study.

ii) **Analysis method:** Several HC analysis methods are highlighted in Section 5.3 and other techniques are still developing. Selection of the appropriate method needs consideration with respect to the use cases as well as incurred costs. For instance, a method that best suits fast-tracking interconnections may not be suitable for DN planning studies.

iii) Considerations about the level of scalability and granularity: Identifies that either HC studies should be carried out for the entire distribution network or only the specified feeders and also, what level of details should be considered in each study.

5.2 PERFORMANCE INDICES

Various operational indices are considered in HC studies including voltage and frequency excursions, thermal overload, power quality issues and protection problems [24] [25]. A complete list of indices suggested by EPRI's distributed PV (DPV) tool includes [26]:

- Primary system overvoltage/undervoltage
- Primary system voltage deviation
- Regulator voltage deviation
- Secondary system voltage deviation
- Secondary system overvoltage/undervoltage
- Sympathetic breaker tripping
- Breaker reduction of reach
- Breaker/fuse coordination
- Element fault current
- Thermal overload

Therefore, before performing any HC study, performance indices and their acceptable ranges must be decided. For example, an overvoltage violation can be flagged if a nodal voltage above 1.1 p.u. occurs. Therefore, the final HC depends not only on the selected operational indices but also their definitions (based on the preferred standard and/or operational requirements) and their acceptable limits. Two examples from the performed studies are reported in Table 5-1 (based on US requirements).The study presented in [12] provides a comparison of the main definitions for over/under voltage, voltage unbalance, and harmonics and their thresholds based on different standards.

Overvoltage and loading are by far the most important indices which are considered in the HC studies in the literature. Different works have indicated overvoltage problems as the most important factor that limits the HC of distribution feeders. In [13], a comprehensive study has been carried out by analysing 50,000 LV systems from a Brazilian distribution utility. The operational indices considered in this study include the over/under voltage issues, voltage unbalance, thermal capacity of conductors and transformer overload. Consistent with similar studies, they identified the overvoltage and conductor thermal capacity as the main factors where the first violation happens on the feeders (Fig. 5-6).

Table 5-1 Sample performance indices and their limits for HC studies

Ref.	Performance indices and their definitions
[13]	▪ **Over/Under voltage:** Voltage must be below 1.05 p.u. and above 0.92 p.u. A violation is flagged if there are nodal voltages between 1.05 and 1.06 p.u. or between 0.87 and 0.92 p.u. for more than 3% of the monitored period (more than 3 not necessarily consecutive 15-minute snapshots in a 24-hour simulation). A violation is also flagged if any voltage is above 1.06 p.u. or below 0.87 p.u. at any 15- minute snapshot. ▪ **Voltage unbalance:** Must be lower than 3.0%. A violation is flagged if the maximum voltage unbalance of the circuit exceeds 3.0% for more than 5% of the monitored period (more than 4 not necessarily consecutive 15-minute snapshots in a 24-hour simulation). ▪ **Conductor thermal capacity**: Conductor currents must be below the conductor thermal limits. A violation is flagged if the maximum branch current of the circuit exceeds the conductor thermal limit for more than 1 hour (more than 4 consecutive 15-minute snapshots in a 24-hour simulation). ▪ **Transformer overload:** Transformer loading must be lower than 187.5% of transformer rated capacity. A violation is flagged if transformer loading exceeds 187.5% of its capacity for more than 1 hour (more than 4 consecutive 15-minute snapshots in a 24-hour simulation).
[27]	The limits specified by NEMA ANSI Standard C84.1–2011. ▪ **Voltage magnitude:** ±5% deviation from nominal value ▪ **Voltage unbalance:** 3 %

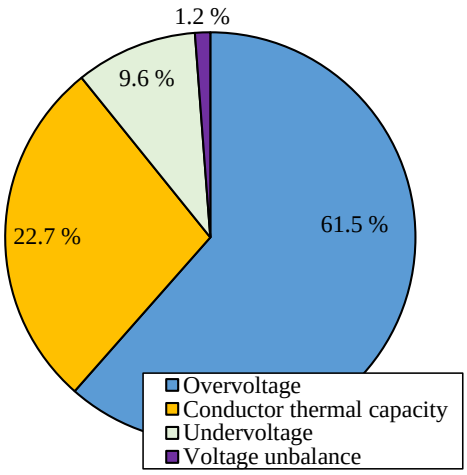

Fig. 5-6 Incidence of the operational limit first violated by PV penetration in the 50,000 DNs [13]

5.3 HOSTING CAPACITY QUANTIFICATION METHODS

After selecting the performance indices, the quantification method for the HC needs to be determined. This is done based on the data availability and the required accuracy.

Traditionally, some rules of thumbs were used to define the volume of DERs that can be connected to a DN, for example, by requiring the total DER installation on a feeder to be less than 20% of the feeder peak load. These rules were generally defined based on thermal limit, short circuit capacity and load percentage considerations. A list of such rules for different countries is reported in [20].

Conversely, as a common procedure among distribution companies, a general rule of thumb, was to require detailed HC studies only for those feeders which have PV interconnection requests higher than a certain value [19]. For example, California Rule 21 Interconnection [28] and the Federal Energy Regulatory Commission's Small Generator Interconnection Agreements and Procedures [29], which are used by many states in the US as guidelines for developing interconnection procedures, both suggest a rule of thumb based on 15% of the feeder peak load. There are also different procedures

and rules among different Australian DNSPs for PV installations which are outlined in their connection standards. For example, Ausgrid studies the impact of PV and the possible voltage rises for all installations [30]. On the other hand, Ergon Energy necessitates the studies only if the size of PV is bigger than 3.5 kVA [31]. Some DNSPs limit the size of PV installations on a feeder to a specific limit whereas some others consider the transformer rating as the determining factor [31].

However, these rules of thumb are outdated and cannot reflect the true nature of distribution systems and the significant diversity among various distribution feeders. For instance, a study by EPRI [26] shows that there is not a strong correlation between the peak load and the HC of a feeder. Therefore, both research studies and industry practices have increasingly considered mathematical methods for quantifying PVHC. Various methods have been proposed in the literature and used by electricity service providers that are categorised under different names. For example, [20] and [21] categorise the HC determination methodologies into the streamline, iterative and stochastic approaches and analytic, stochastic and streamlined methods respectively. In its recent report [32], EPRI characterises the main HC assessment methods as stochastic, iterative, streamlined and hybrid-DRIVE and explains their features. As highlighted in this report, the HC quantification methods are rapidly evolving and differentiating between the various approaches is difficult.

In the following, firstly, using the terminology in [24], the three main methods for HC calculation, which are utilised in scholarly publications, including deterministic, stochastic, and time series methods are briefly described. These methods can be seen as the basis for other sophisticated methods used by industry. Therefore, in the next sub-sections, several practical methods that are utilised by DNSPs are further highlighted.

5.3.1 Deterministic methods

Deterministic methods are based on predefined values for system parameters such as given grid data, PV input parameters and customer models and usually consider the worst-case scenario to evaluate the effect of uncertain parameters [12]. Uncertainties include a range of technical and economic parameters such as user energy consumption, PV production and economic incentives. By ignoring the intrinsic characteristics of uncertain variables, these methods may result in overestimations or underestimations of HC.

Deterministic methods can consider the different PV values by increasing or decreasing the PV values at DN nodes in steps. This can be performed using forward, backward or forward-backward methods [24]. In forward algorithms, the PV size is increased in steps starting from the first node and moving down towards the end of the feeder. Backward methods, on the other hand, start from the last node and move towards the first node. Forward-backward methods use a combination of these two techniques. In all of the three methods, grid indices such as overvoltage and loading are monitored until the first violation happens which indicates the HC.

While the use of deterministic techniques may be good enough for large DG installations, their application for a very large number of distributed PVs can be limited since there are a large number of uncertainties including the size and locations of individual PVs.

5.3.2 Stochastic methods

Stochastic methods consider the uncertainties in the network by using various methods and result in a probabilistic model of the network and a probabilistic power flow problem. Therefore, modelling of the uncertain input parameters and the use of proper computational algorithms are necessary. Various methods are introduced for uncertainty modelling. The study presented in [33] provides an overview of such techniques including probabilistic approaches, robust optimisation, interval analysis and information gap decision theory techniques.

In probabilistic approaches, the input variables can be represented by probability distribution functions (PDFs) which are created based on historical data. For example, [34], [35], and [36] respectively use a beta PDF for the solar irradiance, a uniform PDF for location and size of the PV system and a binomial PDF for the PV system reliability. Algorithms for solving the probabilistic problems are generally divided into two categories including numerical and analytical methods. The most famous numerical methods are Monte-Carlo (MC) simulation algorithms such as sequential and non-sequential MC [12]. This method is a useful tool and can be used as the benchmark for comparison with other algorithms. However, it may also suffer from computational burdens since it evaluates a large number of scenarios. Sample reduction or quasi MC techniques can be used to solve this problem. Analytical algorithms obtain the PDF of output variables from the PDFs of input variables by an analytic method such as linearization-based [37] and approximation-based [33] methods.

Different HC estimation tools are developed based on the stochastic analysis. EPRI DPV tool [26] is one of the major tools which evaluates a wide range of spatial and sizing scenarios by considering thousands of randomly selected scenarios of size and location. EPRI has also proposed another method which needs fewer scenarios for decreasing computational burden [38]. Several other computational platforms have been also developed by research efforts and industry [19].

While stochastic methods can improve the accuracy of HC studies, it can still suffer from some problems. Mainly, it cannot capture the relationship between system variables over time. Furthermore, the impact of PV production variations in time scales of minutes or less on voltage regulating elements such as transformer tap-changers are not usually considered [24].

5.3.3 Quasi-static time-series methods

With the increasing use of newer technologies such as DGs, ESS units, smart inverters and EVs, distribution system analysis increasingly requires Quasi-static time series (QSTS) analysis. The IEEE Std 1547.7 [39] defines QSTS simulations as "Quasi-static simulation refers to a sequence of steady-state power flow, conducted at a time step of no less than 1 second but that can use a time step of up to one hour. Discrete controls, such as capacitor switch controllers, transformer tap changers, automatic switches and relays may change their state from one step to the next. However, there is no numerical integration of differential equations between time steps."

QSTS solves a series of sequential steady-state power flows. Each solution in each time step depends on the previous solutions obtained at previous time steps which provide the information about the regulator taps, capacitor controllers, feeder state, etc. [40]. Without applying QSTS, many probable impacts of DGs on system performance such as the time periods with voltage violations or the increase in tap operations, might not be captured correctly.

The existing methods of PV HC usually concentrate on modelling critical periods such as the peak and minimum load periods. Therefore, generalizing the results to the whole year and all time periods will be difficult and the impact of PVs on voltage regulating devices and voltage profile cannot be fully captured. QSTS analysis uses the time series data of load and PV generation to accurately estimate the PV HC.

Different studies have demonstrated the importance of HC based on the QSTS analysis. However, it should be noted that the high-resolution data requirements and computational burden of QSTS are the main barriers to applying such analysis to all HC studies [24]. Actual measurements of load and production or alternatively, the time-series data generated by different techniques such as autoregressive moving average (ARMA) are needed in QSTS studies. Measurements is required for long periods, for instance, several years and the generated time-series data suffers from huge

computational burdens. Also, it has been shown that the time resolution of data affects the HC results [41].

In addition to commercial software, there are some useful tools for performing PV studies using QSTS simulations. One such tool is developed by Sandia National Laboratories [42] to simulate the effect of PVs on the DN. It comprises a MATLAB toolbox which is interfaced with OpenDSS, thereby, combining the simulation abilities of OpenDSS with advanced functionalities of MATLAB.

5.3.4 Comparison of methods

The selection of a method for a particular HC study depends on various factors mainly the desired accuracy of HC analysis, the availability of data, and computational tools. Table 5-2 shows some of the advantages and disadvantages of these methods [24].

Table 5-2 Advantages and disadvantages of each of HC quantification methods [24]

Method	Advantages	Disadvantages
Deterministic	• Uses few input parameters. • Required input parameters are readily available. • Fast and easily implemented. • Basic method in use by most NSPs. • Presents a quick overview of grid performance under solar PV penetration.	• Assumes fixed values and does not consider the intermittent nature of solar PV. • Does not consider uncertainties. • HC obtained is an estimate of the worst-case scenario and not the true value. The impact is overestimated and the hosting capacity underestimated.
Stochastic	• Considers uncertainties in the network, power consumption and solar PV production. • Presents a realistic overview of the network performance under solar PV penetration based on probability distribution functions or possibility theory. • The method simulates realistic network scenarios. • Less time burden than time series methods. • The method accommodates all PDFs. • Comparatively easy to execute.	• Large computational time and storage required with the increase in uncertainties considered in large distribution grids. • Does not assess the time-related operation of control elements and grid performance. • Complexity increases with the number of uncertain parameters. • Requires use of probability distributions functions which can affect the accuracy of the result.
Time series	• Considers time correlation in the network, power consumption and solar PV production. • Considers time-varying impacts of solar PV on the grid and operations of control elements in HC determination. • Presents a realistic overview of the grid performance under solar PV penetration based on the time-varying nature of power consumption and production. • Can provide information related to the 'when' and 'how' of the HC quantification.	• Requires a large amount of measurement data • Might require a lot of generated data. • Some performance indices may require resolution down to 1 s and pose a computational challenge. • The method is very time-consuming for high-resolution simulations.

Table 5-3 reports sample studies which have used the illustrated methods.

Table 5-3 Studies with different quantification methods and their performance indices

Ref.	Method	Considered Indices
[43]	Deterministic	Overvoltage, harmonic distortion
[44]	Deterministic	Voltage magnitude, voltage unbalance, loading
[45]	Deterministic	Voltage magnitude, loading
[26]	Stochastic	Voltage magnitude, voltage unbalance, transformer loading, feeder loading
[31]	Stochastic	Overvoltage and voltage deviation constraints
[46]	Stochastic	Overvoltage, Conductor loading
[47]	QSTS	Voltage magnitude profile, voltage unbalance, loading and losses
[48]	QSTS	Fast voltage variations at 1-second step values
[49]	QSTS	Voltage magnitude, protection and tap changer operations

In the following sub-sections, three main HC determination approaches used by industry including streamlined, iterative and hybrid-DRIVE methods are illustrated [32], [50]. These methods are developed to overcome the extensive resources and simulation time that the direct modelling of all scenarios requires.

5.3.5 Streamlined method

This method was initially proposed by PG&E as a part of the Distribution Resource Plan for calculating HC across the DN. In this method, a set of equations and algorithms are applied to assess the performance indices at each node of the DN. Its implementation can be divided into two stages: first, it performs a baseline power flow analysis to obtain the initial conditions of the network. In the next stage, the method evaluates the specified performance criteria including voltage, thermal, and protection limits. The process can be repeated for multiple time periods (since 576 hours is required by California integration capacity analysis requirements), enabling it to capture the daily changes in load, DER, and voltage regulation devices (similar to a time-based HC).

The streamlined methodology is a DER-agnostic HC approach meaning that it calculates the HC regardless of the DER technology. The DER technology-specific HC can be further assessed by considering the DER profiles of each technology.

In general, the method has computational efficiency and can provide a form of time-based HC [51]. The disadvantages include the compromised accuracy for more complex circuits and the need for the time-series load and DER forecast (using, e.g., smart meter data).

5.3.6 Iterative method

This method was proposed by Southern Californian Edison (SCE) and San Diego Gas & Electric (SDG&E) companies. Unlike the streamlined method that utilises a calculation-based approach, the iterative method uses the distribution analysis software packages to perform HC assessments. The approach considers single locations for DERs one at a time and increases the DER value until a violation occurs. Similar to the streamlined method, the iterative method also performs a time-based DER-agnostic HC over multiple periods.

The iterative methodology has also been implemented in commercial software such as Cyme and Synergi. Its advantages include the ability to undertake multi-feeder analysis (all feeders of the substation) and the use of readily available tools. Similar to stochastic methods, the iterative approach suffers from the computational time required for considering DER scenarios. It, also, requires load and DER forecast for time-based HC analysis.

5.3.7 Hybrid-DRIVE method

Distribution Resource Integration and Value Estimation (DRIVE) HC method is a recently developed methodology by EPRI as an effort to overcome the problems of the previous methods such as the computation burden while providing an accurate assessment of the feeder's HC. Essentially, this method has its roots in stochastic analysis and has similarities to both streamlined and iterative approaches. Like the streamlined method, it initially uses a set of power flow case studies to characterise the feeder response and similar to the iterative method, it utilises more efficient tools for protection analysis. The DRIVE method is implemented in two stages. In the first stage, the feeder data is collected by interfacing to the DN planning module and a set of power flow and fault analyses are performed considering the feeder's minimum and maximum load levels. In the next stage, the HC assessment for a range of DER scenarios including the centralized (one-site) large DER, distributed (multi-sites) large DER, and distributed customer-based small DER are carried out.

5.4 IMPLEMENTATION CONSIDERATIONS

Each DNSP may follow its own procedure for implementing HC studies. The frequency of updating the HC results for example, in real-time, monthly, or annually is one of the parameters that needs to be decided.

DNSPs can also follow a phased roadmap for implementing HC studies. For example, a four-stage HC implementation plan is defined by New York utilities with each subsequent stage increasing in effectiveness, complexity and data requirements. Some other considerations include validation of results, transparency and the approach for repeatability of studies.

5.5 LOCATIONAL HOSTING CAPACITY

HC studies usually try to determine the amount of PV that can be integrated into the feeder without violating the operational limits. Above the minimum HC, the location of PV becomes important i.e. the PV installation on some locations are considered acceptable, but on some others are not. Therefore, a locational HC can be defined that finds the maximum amount of PV that can be placed in any node of the feeder. It provides this opportunity to generate detailed HC maps which visualize the HC along the feeder using appropriate colour coding. The concept of locational HC is illustrated in Fig. 5-7 [20].

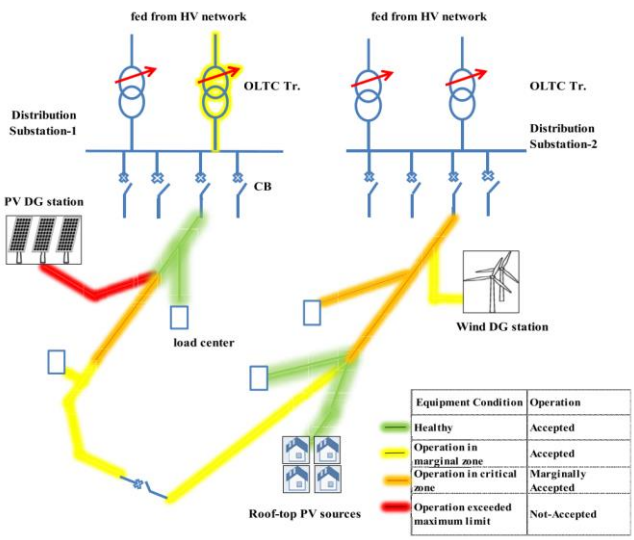

Fig. 5-7 HC maps illustrating the condition of each part of the network [20]

Fig. 5-8 displays a more realistic locational HC map for a 12.47 kV distribution feeder [52]. It shows the maximum size of PV that can be located on different nodes before violating the feeder voltage or loading limits.

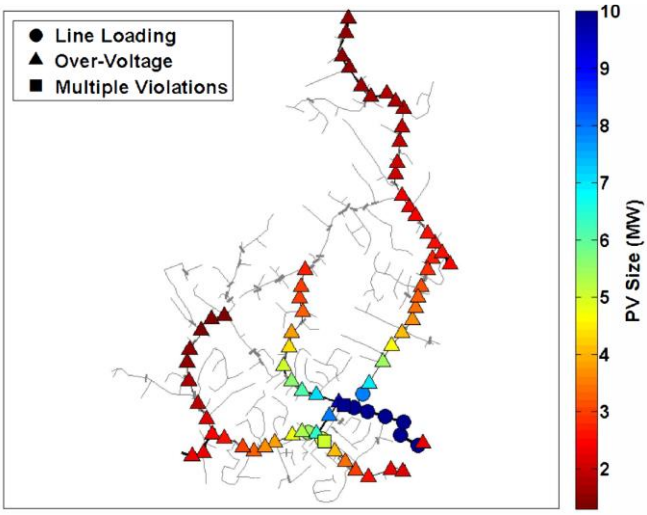

Fig. 5-8 Locational PV HC for each bus for a real distribution system [52]

Different NSPs publish their regularly updated HC maps as a cost-effective way for indicating those locations which are the most valuable for DER integration. This is usually done by integrating the HC maps into the GIS system.

In California, these maps go beyond only PV capacity and the data for each feeder include various information such as the existing generation (MW), queued generation (MW), maximum remaining generation capacity (MW), current penetration level (%) and projected load (MW). Similar approaches are followed by some other states in the USA where more detailed discussions and comparisons can be found in [23]. In Australia, this data is published by DNSPs and is also brought together under the Network Opportunity Maps published by Energy Network Australia (ENA) [53]. Some international and Australian HC maps can be seen in [54], [55], [56], [57].

6 Hosting Capacity Enhancement Strategies

Increasing HC level can benefit both NSPs and DER owners, thus, various technical solutions are proposed to enhance the HC of DNs. This is performed using a mixture of traditional and novel devices and approaches. In the following sections, the main conventional and emerging technologies for increasing HC levels are illustrated.

6.1 CONVENTIONAL APPROACHES

6.1.1 Reconductoring and network reinforcement

Network reinforcement may be unavoidable especially when other voltage regulation methods cannot maintain the voltage at its defined limits. Replacing existing conductors with ones with larger cross-sectional area is a traditional method of solving voltage regulation issues and increasing PV hosting capacity. Another option is to replace the distribution transformer with one with a larger power rating. However, these approaches can be very costly and may require extensive time and effort.

6.1.2 On-load tap changer at the zone substation

On-load tap changers (OLTCs) are essential parts of DNs that are usually implemented at zone substations to regulate the voltage along the feeder. Conventional OLTCs use mechanical parts for changing the taps as shown in Fig. 6-1 [8]. In some cases, OLTCs cannot respond adequately to the fast voltage fluctuations caused by intermittency of PV panels. Other problems of OLTCs include the high maintenance costs and failure rates especially with high PV penetration in the grid which requires many more tap changing operations than was previously the case [58] [59] [60].

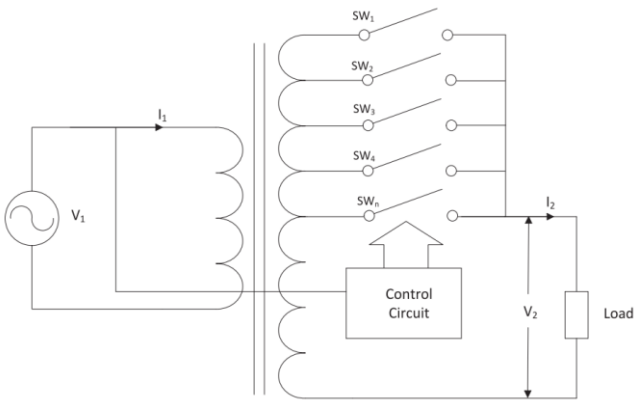

Fig. 6-1 Schematic of a typical on-load tap changer [8]

Electronic tap changers equipped with solid-state switches are a possible solution to the problems of traditional OLTCs. They act as fast voltage regulators, have higher performance, and require less maintenance. One sample structure of electronic OLTCs is shown in Fig. 6-2 [8].

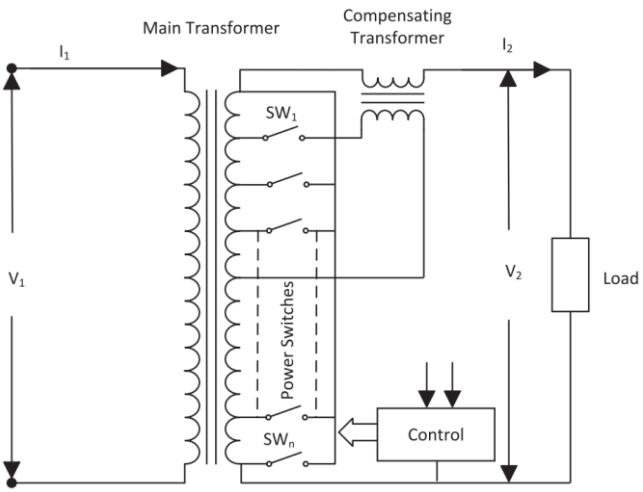

Fig. 6-2 Schematic of a fast on-load tap changer [8]

Recently, innovative solutions have been proposed for replacing conventional transformers and OLTCs with power electronic transformers or on-load voltage regulators based on power electronics (OLVR-EPT). OLVR-EPT uses novel techniques such as power electronics and high-frequency magnetic materials for fast and continuous voltage regulation.

6.1.3 Off-load tap changers

In many DNs, distribution transformers are equipped with 5 or 7 tap settings which are set manually. Each tap usually changes the output voltage by 2.5%. Based on the feeder voltage profile, the tap position is changed to provide fixed voltage regulation. Since it requires manual intervention, it cannot react to daily voltage changes.

6.1.4 Capacitor banks

Fixed and switched capacitor banks are traditionally used in DNs for voltage control and are switched on to increase the voltage when the feeder faces undervoltage issues. However, under the new circumstances with high PV levels, capacitor banks can hardly provide an effective voltage control. During high PV generation, the voltage along the feeder increases and the fixed capacitors can worsen the overvoltage problem. In addition, switched capacitors operate in discrete steps and may not respond effectively to constantly changing load patterns and voltage fluctuations in the network.

6.2 EMERGING TECHNIQUES

6.2.1 Control of PV inverters

Recently, smart inverter capabilities have been increasingly considered for voltage regulation. These modern inverters can respond to voltage conditions and continue injecting power to the grid under conditions in which the conventional inverters might be disconnected due to overvoltage issues [61].

Historically, international standards and grid codes prevented voltage regulation by inverters. For example, in earlier versions of IEEE 1547 (guidelines for interconnecting distributed resources with electric power systems), PV inverters were preferred to operate with unity power factor and were not allowed to actively regulate the voltage. However, many standards and national codes are under reconsideration to allow inverters to participate in voltage regulation by changing their reactive and active power set points. For instance, IEEE 1547-2018 or Australian standard AS4777 include the option for local voltage regulation through smart inverters [9]. Currently, this is performed using droop curves - piecewise linear curves which allow VAR injection/absorption for low/high voltages and active power reduction/curtailment during overvoltage conditions. In Australia, these curves are usually referred to as power quality (PQ) response modes under AS/NZS 4777.2:2020.

More discussions on smart inverters including the use of advanced settings and dynamic settings for inverters, the general challenges related to voltage regulation using PV inverters and the specific issues of the utilisation of smart inverters for Australian networks is presented in Section 7.

6.2.2 Distributed energy storage systems

Energy storage systems (ESSs) such as in-home batteries or community energy storage offer potential for higher integration of intermittent renewable resources. Decreasing battery costs, technology development and the high adoption of residential ESSs make them a reasonable option for mitigating voltage problems and increasing the PV hosting capacity. The storage systems can also be used for other purposes such as smoothing the PV power output and scheduled energy trading with the network [62].

While the BESS can be an effective solution for HC enhancement, advanced control methods are required to ensure its operation is as efficient as possible. For instance, residential BESSs are usually controlled using a simple control strategy in which the battery is charged when the production is higher than consumption. Therefore, the battery may be fully charged after a few hours and will not respond to network events when it is most needed.

A number of studies have examined the application of storage systems for voltage management in DNs [62]. In [63], a coordinated control mechanism using local and distributed controls is suggested as a solution to voltage rise in DNs with a high penetration of PVs. The local control is responsible for maintaining the state of charge (SoC) of ESSs in the desired range, and the distributed control regulates feeder voltages within the specified limits. The study presented in [64] considers detailed models of PV and batteries and proposes a control strategy to mitigate voltage rise by charging/discharging of ESS units. Moreover, the suggested method has been applied to a distribution feeder in Australia to verify its applicability. A storage planning mechanism is proposed in [65] to avoid grid reinforcement and active power curtailment of PV units. The performance of distributed storage units on different nodes and a single centralized storage on a feeder node are compared and the location and size of ESS units are decided. Other centralized [66] or decentralized [67] coordination methods of ESS units for voltage control of distribution feeders are also suggested in the literature.

Actual projects in different countries including Australia [64], Canada [68], Denmark [69] have demonstrated the merit of BESS systems in HC enhancements. Ref. [64] considers the detailed models of PV and batteries and proposes a control strategy to mitigate voltage rise by charging/discharging of BESS units. The applicability of voltage regulators and BESS for increasing the HC of remote community feeders are studied in [68]. The findings show that the four-quadrant operation of BESS can increase the HC substantially. Ref. [69] proposes the use of dynamic set points for BESSs. A central controller forecasts the PV generation and load consumption, estimates the reactive power absorbed by each smart inverter, and determines the dynamic set points by solving an optimisation problem. These set points are communicated to BESSs for a specific period of time. The results indicate a considerable decrease in the needed BESS for overvoltage prevention.

6.2.3 Low voltage regulators

A low voltage regulator (LVR) increases (boost operation) or decreases (buck operation) the voltage on the LV grid within a band set around the nominal voltage. For example, an LVR can operate within a range of +/-13% of the nominal voltage and has a regulation accuracy of +/-1 V. An LVR with bi-directional capability is able to adjust the voltage when the power flow is reversed from the DN to the distribution substation. An LVR essentially comprises a transformer, a tap changer, a reversing polarity switch that sets the direction of voltage change, and an electronic controller for measuring the input and output voltages and instructing the tap changer.

The main advantages of LVRs are ability to install at different locations and to regulate the voltage during reverse power flow [70]. The major disadvantage is the cost, especially, for low-density DNs.

DNSPs in Australia have started using LVRs in their networks. Applications differ among different DNSPs. For instance, Ergon Energy has started using LVRs since 2008 and has installed more than 1000 LVRs in its DN [70]. On the other hand, only approximately 40 LVRs are currently installed on CitiPower and Powercor (CPPAL) DNs.

6.2.4 FACTS devices

Flexible AC transmission system (FACTS) devices are a relatively mature technology for transmission networks. There have been efforts to introduce these devices at distribution systems. Some of the most important FACTS controllers for DNs are briefly described in the following [8] [71].

Dynamic voltage restorer (DVR): The DVR protects loads from supply disturbances such as sags/swells by regulating the voltage at the load terminals. It can be seen as a voltage source inverter (VSI) consisting of DC power sources, a converter, and an injection transformer which is connected in series with the distribution feeder or load. The DC power source can be realized using batteries, supercapacitors, flywheels or superconducting magnetic storage (SMES) units. A basic structure of DVR is shown in Fig. 6-3 [71].

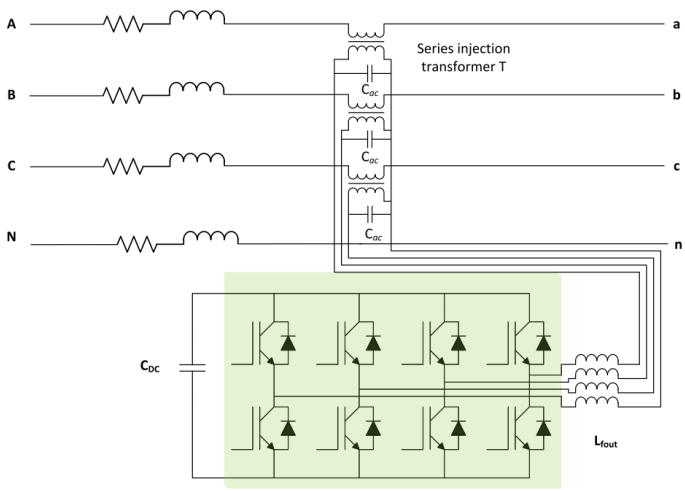

Fig. 6-3 Schematic of a typical DVR connected to a DN [71]

Distributed static compensator (D-STATCOM): D-STATCOM is a synchronous voltage generator that is connected in parallel to the distribution system and can absorb/inject reactive power into the network. Various D-STATCOM topologies are reported in the literature for example, for three-phase three-wire and three-phase four-wire networks or isolated and non-isolated systems [72]. The components of D-STATCOM include the DC bus capacitor, voltage source converter, transformer, and a ripple filter as shown in Fig. 6-4.

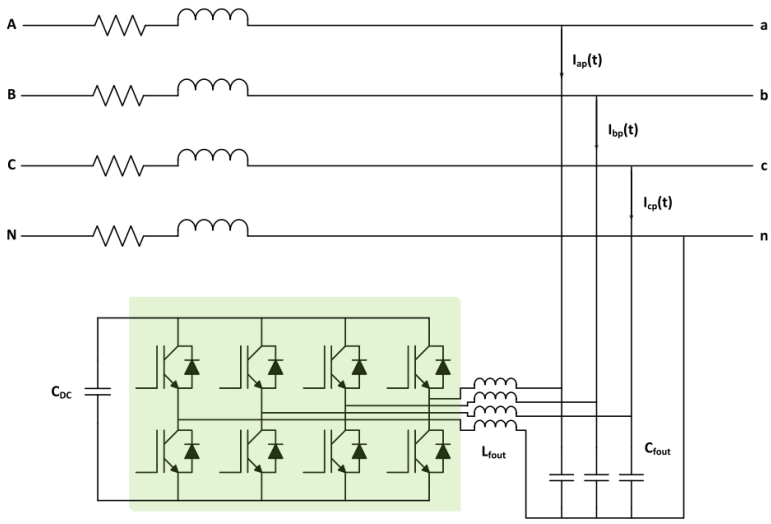

Fig. 6-4 Schematic of a DSTATCOM connected to a DN [71]

Performance of D-STATCOMs has been evaluated in some trials in Australia. For instance, Ergon Energy has deployed several D-STATCOMs to manage very high PV penetrations. The findings showed that D-STATCOM can regulate voltage effectively and, in some cases, it is less expensive than traditional approaches for mitigating voltage problems.

Unified power flow controller (UPFC): UPFC is the most comprehensive FACTS device available and can control the active and reactive power flows of a feeder [73]. It comprises of two converters with a common DC link fed by a DC storage capacitor. As demonstrated by Fig. 6-5, one of these converters is in series with the line while the other acts as a parallel converter. By exchanging both real and reactive power with the network, UPFC can implement power flow regulation, improve the feeder transmission capacity, and realize fast-acting reactive power compensation resulting in the fast voltage regulation at the access point.

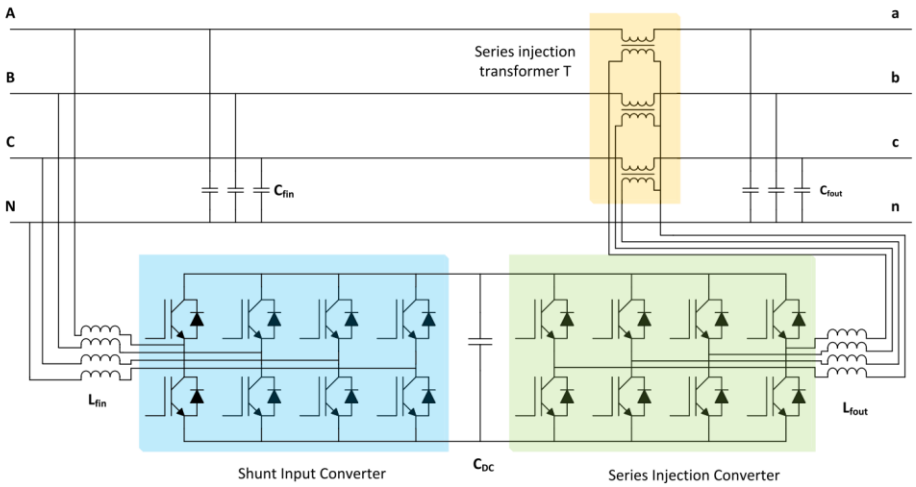

Fig. 6-5 Schematic of a UPFC connected to a DN [71]

The applications of FACTS devices for DNs is still an ongoing research topic [74]. Some studies explored the applicability of DVR [75], D-STATCOM [76] and UPFC [77] for voltage control, loss minimisation and power quality improvement at the distribution level.

6.3 OTHER APPROACHES

In addition to the above-mentioned methods, various proposals for network voltage management and HC enhancement have been suggested in the literature with some having been implemented in real networks.

6.3.1 Network reconfiguration

Network reconfiguration has been widely studied and practised for several purposes including loss reduction, load balancing and reliability improvement. Network reconfiguration has also been considered in some studies for HC enhancements. A major challenge is that the application of network reconfiguration is dependent on certain network structures e.g. urban networks with multiple transformers.

HC improvement has been achieved in [78] using the static and dynamic network reconfigurations which refer to reconfiguration at planning and operational stages respectively. Results indicate that optimal network reconfiguration, which can be gained by a limited number of switching actions, is an effective means to accommodate more DGs in the network. In [25], a multi-period network reconfiguration that considers the uncertainty of renewable energy generation is developed to increase the HC to the sufficient level in each period.

6.3.2 Conservation voltage reduction

The conservation voltage reduction (CVR) technique has been known and used for several decades, and its use has gained attention more recently for voltage management, demand reduction and increasing HC. The CVR philosophy was also trialled in Australia in several projects by different DNSPs. In one project [79], a dynamic voltage management system is utilised for demand response initiatives. A network control centre uses the data of smart meters across the network and remotely reduces the voltage at 47 zone substations while maintaining voltage compliance during the demand response events.

6.3.3 Harmonic reduction

In some cases, power quality issues such as harmonic distortion can have a substantial effect on HC levels, thus, necessitating the development of specific strategies for harmonic reduction. Ref. [80] evaluates the HC in the presence of non-linear loads and identifies harmonic distortion as the main factor constraining the HC. Therefore, a C-type filter is designed to maximize the HC while providing the desired power factor.

6.3.4 Flexible interconnections

The concept of flexible interconnection refers to the curtailment of the active power of a DER when it is necessary to avoid system violations [81]. It can be used as an option to defer network upgrades and as a method for voltage regulation in DNs. This approach has been extensively explored in the UK. More technical details and different ways of implementing flexible interconnections can be found in [81].

6.4 ADVANCED NETWORK MANAGEMENT APPROACHES

Active distribution network management techniques are used in DNs for controlling different equipment to achieve optimal voltage management and increase HC.

The coordinated control of different equipment is an option for achieving optimal voltage management. A large number of control mechanisms have been proposed for coordination between NSP equipment such as OLTCs and switched capacitors and customers' devices including ESSs and

smart PV inverters. A sample structure demonstrating the coordinated operation of distributed ESSs with transformer tap changers is shown in Fig. 6-6 [82].

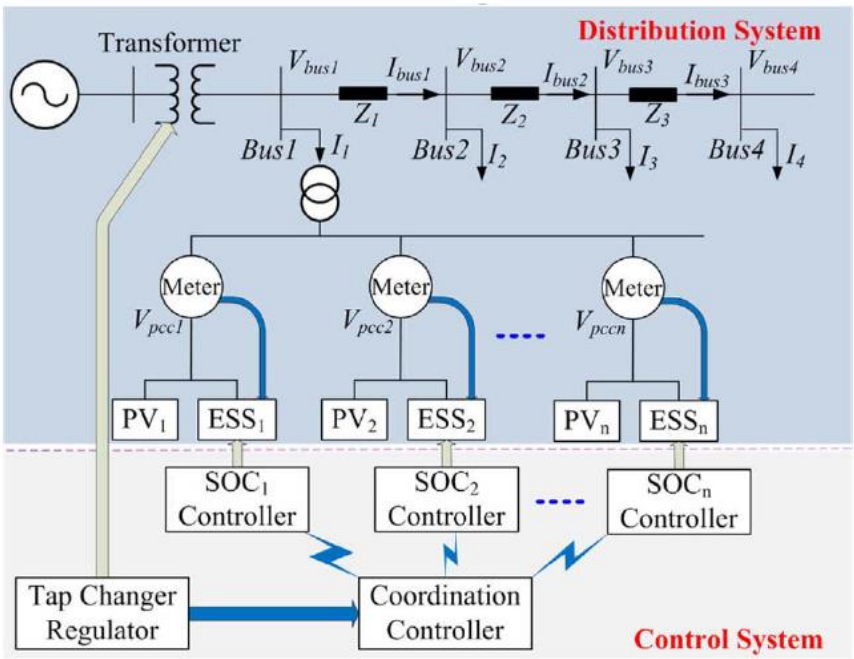

Fig. 6-6 A sample coordinated operation of tap changer and distributed ESSs [82]

The operation of ESSs with OLTCs [82], EV batteries with smart inverters [83], OLTCs with voltage regulators and DERs [84] are examples of such approaches.

A combined network management approach is proposed in [27] to maximise HC by optimally switching capacitors, adjusting voltage regulator taps, reconfiguring system topology by managing controllable branch switches, and controlling PV inverters. The obtained results show a significant improvement in HC using a combined active management of DN equipment.

Other advanced methods have also been suggested in different studies. For example, [85] compares the effectiveness of three different methods for voltage management for PV installations. The study suggests the utilisation of PV inverters as well as a distribution management system (DMS) which controls the voltage and reduces the demand through conservation voltage reduction (CVR). This approach shows promising results for integrating PV installations into the grid.

While there are a significant number of theoretical studies and proposals, many of the suggested methods might not be applicable in practice due to the difficulties in implementation or associated costs. For example, many DNSPs are still not equipped with adequate technology to establish control schemes that require extensive data exchange.

6.5 EXISTING PRACTICES

Currently, DNSPs define a procedure to deal with voltage problems especially in the presence of high PV levels. Different traditional and innovative solutions are utilised based on the nature and severity of the problem. One sample procedure, implemented by Queensland DNSPs, is shown in Fig. 6-7 [86].

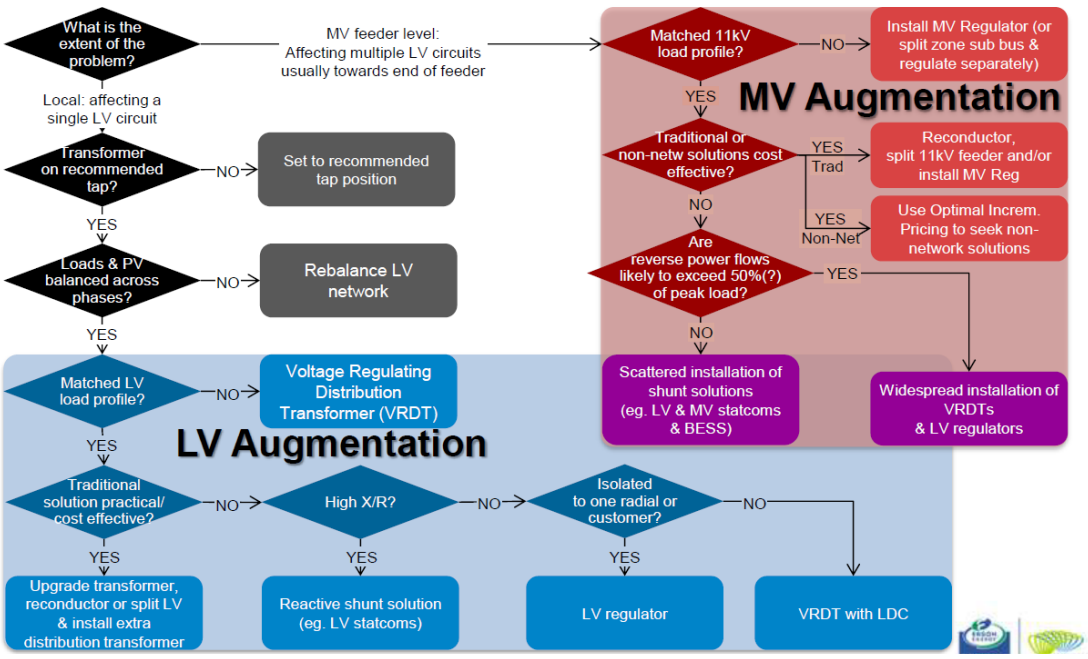

Fig. 6-7 Network options for mitigating voltage problems [86]

In Sections 9 and 10, some of the international and domestic projects, which examined innovative approaches for improving HC of DNs are reviewed.

7 Advanced control of smart inverters and related challenges

In this section, firstly, more detailed discussions regarding different PV inverter settings are provided. Secondly, the challenges in voltage regulation using smart inverters are described. Finally, the future directions in terms of utilising dynamic settings for inverters are highlighted.

7.1 SMART INVERTER FUNCTIONS

AS/NZS 4777.2:2020 defines the specifications for smart inverters. Based on this standard, the inverter must have several power quality response modes including Volt/Watt, Volt/VAr, fixed power factor, reactive power mode and power rate limit. Volt/Watt and Vol/VAr are enabled by default. The maximum response times for the commencement and completion of these modes shall not surpass 1 s and 10 s, respectively. Other functionalities include the required demand response mode for operating the disconnection device, protective functions such as anti-islanding protection and generation control functions for controlling active or apparent output levels of the inverter.

Smart inverter functionalities can generally be divided into autonomous and operator-controlled functions. Autonomous functions such as Volt/VAr and Volt/Watt functions respond to local signals. The inverter can also possess functions which are controlled remotely in response to grid needs for example, direct control signals to disconnect from the grid or to change the inverter settings.

The advanced control of smart inverters in conjunction with storage units allow them to operate in all quadrants of the power plane and change their active and reactive power based on voltage magnitudes (and/or frequency variations) in the network. IEC/TR 61850-90-7 proposes a list of interoperability functions to allow standardization of smart inverters [61].

Reactive power control methods for inverters can be achieved through [62] [87]:

- Q(V) control: reactive power as a function of the local voltage
- PF(P) control: power factor as a function of the PV active power
- PF(V) control: power factor as a function of the local voltage
- Constant power factor

The fundamental operations of the first three methods are demonstrated by Fig. 7-1 [87].

Techniques	Droop curve	Droop Equations
Q(U)	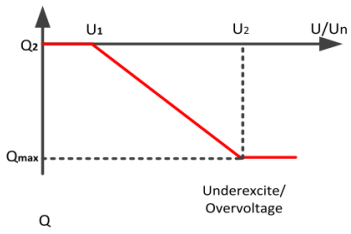	$Q(U) = \begin{cases} Q_2 & , U \le U_1 \\ Q_2 + (Q_{max} - Q_2)\left(\frac{U - U_1}{U_2 - U_1}\right) & , U_1 < U \le U_2 \\ Q_{max} & , U > U_2 \end{cases}$
PF(P)	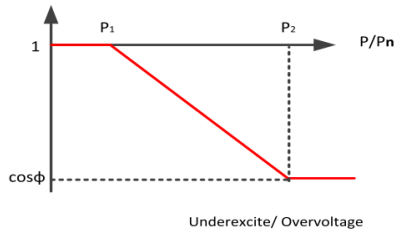	$PF(P) = \begin{cases} 1 & , P \le P_1 \\ -1 + (cos\Phi + 1)\left(\frac{P - P_1}{P_2 - P_1}\right) & , P_1 < P \le P_2 \\ cos\Phi & , P > P_2 \end{cases}$
PF(U)	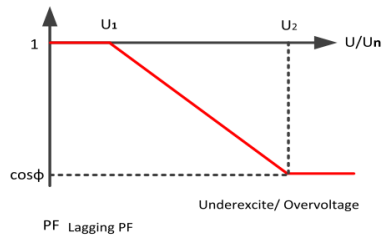	$P(U) = \begin{cases} 1 & , U \le U_1 \\ -1 + (cos\Phi + 1)\left(\frac{U - U_1}{U_2 - U_1}\right) & , U_1 < U \le U_2 \\ cos\Phi & , U > U_2 \end{cases}$

Fig. 7-1 Different reactive power control techniques and their corresponding droop characteristics [87]

P(V) or the active power curtailment method is the main method for controlling the injected active power of PV based on the local voltage as shown in Fig. 7-2.

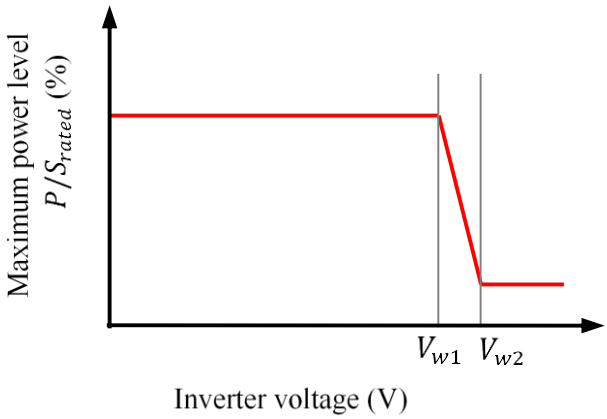

Fig. 7-2 Volt/Watt droop curve

7.1.1 Active/ reactive power priority mode

During certain periods, especially when the PV power output is at its maximum, the inverter's capability in producing/absorbing reactive power might be limited due to the kVA rating of the inverter as following:

$$kVAr_{max} = \sqrt{(kVA_{inverter})^2 - (P_{max})^2}$$

Based on the settings, the inverter can act in each of the active or reactive power priority modes. While it is not clearly mentioned in Australian standards, by default, inverters are set in active power priority modes. In this case, maximising the active power output of the inverter is prioritised and the reactive power injection/absorption is limited based on the equation. Conversely, having a reactive power priority mode indicates that reactive power has precedence over active power, should the kVA rating of the inverter be exceeded.

The setting of the power priority mode clearly affects the inverter's response to voltage conditions that necessitates further investigations. For example, some studies [88] [89] have suggested the use of reactive power priority mode due to the better performance in limiting the momentary overvoltages (further explained in Section 9.1).

7.1.2 Volt/VAr function with hysteresis

In some cases, it is useful to use a hysteresis setting for the Volt/VAr function in which the inverter uses two different curves to respond to voltage rising and falling (offset by a specific per-unit voltage) as shown in Fig. 7-3 [90].

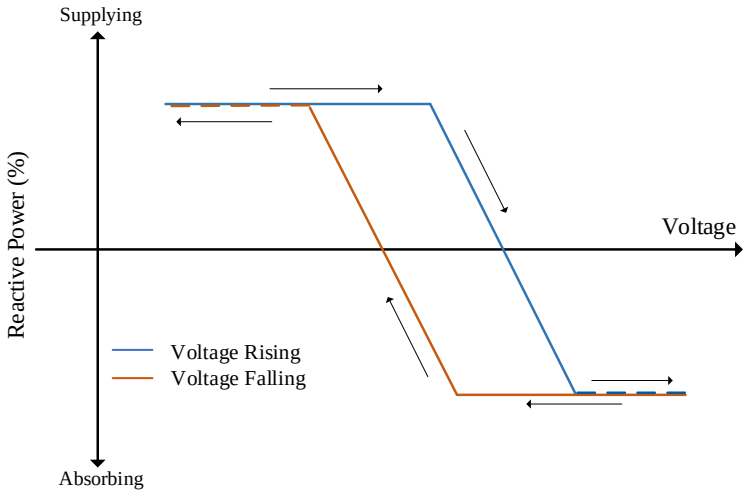

Fig. 7-3 Volt/VAr settings with hysteresis

7.1.3 Dynamic reactive current function

Dynamic reactive current (DRC) is another functionality that can be implemented in smart inverters to provide a fast response to voltage changes [90]. While the Volt/VAr and Volt/Watt functions react based on the voltage levels, the DRC function responds to voltage variations, thus, it acts as a voltage stabilisation function and smooths voltage variation. Based on the needs, the DRC control settings can be tuned to react either only to fast voltage changes (dynamic events) or cover the slow voltage variations too.

7.1.4 Advanced methods for voltage control using smart inverters

Some studies highlight deficiencies of each of the reactive power control methods and active power curtailment strategies and suggest combined approaches using both active and reactive control methodologies [87] [91]. One such an example, demonstrating two possible combinations, is shown in Fig. 7-4 [87].

Techni-ques	Droop curve	Droop Equations
PF(U) & PF(P)	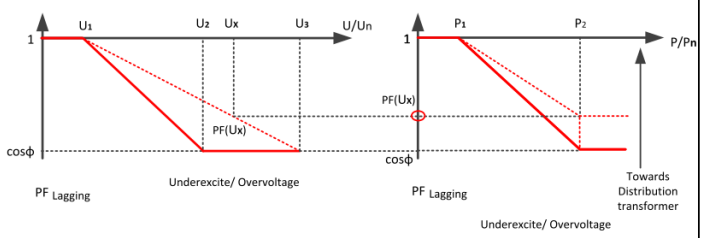	$PF(U,P) = \begin{cases} cos\Phi_{UPF} & , U \le U_1 \\ -1 + (cos\Phi + 1)\left(\frac{U - U_1}{U_2 - U_1}\right) & , U_1 < U \le U_2 \\ PF(Ux) = -1 + (cos\Phi + 1)\left(\frac{U - U_1}{U_3 - U_1}\right) & , U > U_2 \\ -1 + (PF(Ux) + 1)\left(\frac{P - P_1}{P_2 - P_1}\right), P_1 \le U \le P_2 & \\ cos\Phi & , U > U_3 \end{cases}$
Q(U) & P(U)	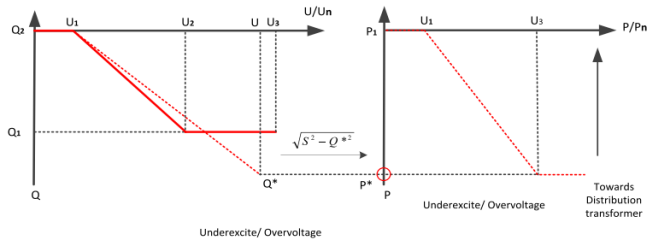	$Q(U) = \begin{cases} Q_2 & , U \le U_1 \\ Q_3 = \left[Q_2 + (Q_1 - Q)\left(\frac{U - U_1}{U_2 - U_1}\right)\right] & , U_1 < U \le U_2 \\ \text{Change the droop curve to } P(U) & , U > U_2 \end{cases}$ $P(U) = \begin{cases} \begin{cases} Q^* = Q_2 + (U - U_1)\left(\frac{Q_1 - Q_2}{U_3 - U_1}\right) \\ P^* = \sqrt{S^2 - Q^{*2}} \end{cases} & , U > U_2 \\ P_1 + (U - U_1)\left(\frac{P^* - P_1}{U_3 - U_1}\right) & , U_1 \le U \le U_3 \\ P^* & , U > U_3 \end{cases}$

Fig. 7-4 More complicated approaches for Volt/VAR control setting of smart meters [87]

7.2 ADVANTAGES OF USING SMART INVERTERS

The voltage regulation capability of individual inverters is able to solve some of the associated problems of the LV grid.

The study detailed in [19] examines the application of advanced functions of smart inverters for 18 different distribution feeders. It concludes that HC can be increased 1.5 - 3 times using these advanced settings. However, it also demonstrates that HC enhancement greatly depends on network configurations. The results emphasize the importance of the research to find which type of setting to use depending on the feeder characteristics and configurations.

Other works such as the studies performed for the Hawaiian electricity network [88] and [89] confirmed that implementation of advanced grid-support functions of inverters can effectively contribute to feeder voltage conditions by adjusting the active and reactive power based on local voltage measurements. The detailed QSTS simulations demonstrate that for the majority of customers (99 %) the PV curtailment under Volt/Watt and Volt/VAR controls is insignificant, accounting for less than 2% of weekly energy generation.

7.3 CHALLENGES OF USING PV INVERTERS

Several problems may arise when using PV inverters for voltage regulation.

i) As previously mentioned, in DNs, variation of active power is more effective in controlling the voltage magnitude than reactive power. Therefore, voltage control with reactive power injection/absorption might require higher power ratings for inverters, results in higher power flows in the network and causes additional losses [92] [63]. On the other hand, active power curtailment leads to revenue loss for PV owners and the reduced availability of PV generation.

ii) In addition to these general issues, each control method might have some unique adverse effects. For example, if high PV production coincides with the high demand, the voltage might remain at its

normal level and the voltage regulation by the inverter through PF(P) will be unnecessary. Q(V) method operates based on the local voltage value sensed by the inverter. Therefore, it does not consider the network voltage profile throughout the feeder.

iii) Furthermore, several studies examine the general challenges associated with droop Volt/VAR control methods [9] [81]. It has been identified by several studies that a slight variation in control parameters (specifically the droop slope) can lead to substantially different responses, hence, necessitating the proper parameter selection based on the feeder operating conditions and network configurations to prevent voltage instabilities. Moreover, it has been shown that achieving both the voltage stability and tracking the desired set-points might be difficult in practice. Furthermore, using Volt/VAr combined with Volt/Watt response modes can create instability if the inverter acts in active power priority mode [81].

In addition, there are some practical problems associated with voltage regulation by individual inverters. These problems are briefly detailed below.

iv) The first practical problem arises from the application of static settings for inverters. Currently, smart inverters use pre-determined setpoints for PQ response modes that do not change based on network conditions. Using static setpoints is inherently a conservative approach since they are decided based on the worst-case scenarios that a network may face during the year. Therefore, the adoption of such settings may result in the underutilisation of DER units and unnecessary curtailments for the majority of the year in which the network is not operating under worst-case conditions.

v) A further problem stems from the nature of response which is based on the measurement of local voltage which means that the inverter is blind to the network conditions.

Considering Australian DNs, there are two extra problems related to PQ response modes:

vi) The first problem is that there is no mechanism in place to ensure that inverters are properly set according to the DNSPs' regulations and/or standards. Some studies have shown that only a fraction of new installations are audited and among those that are, only a fraction are found to be compliant with the standard [93].

vii) The second problem is related to the definition of settings. The inverter set points for Volt/Watt and Volt/VAr response modes (Fig. 7-5) according to the previous AS/NZS 4777.2 standard (2015) are shown in Table 7-1.

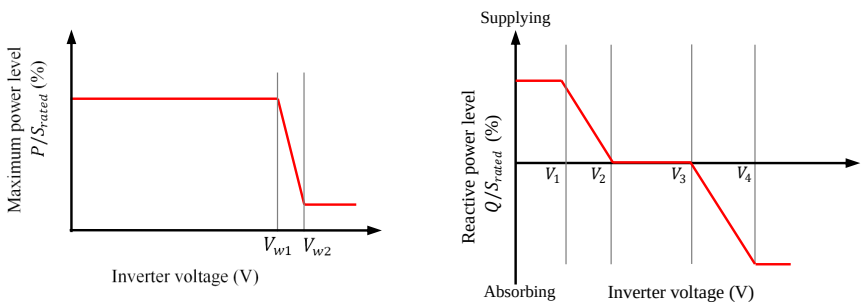

(a) (b)

Fig. 7-5 Inverter droop curves based on Australian standard (a) Volt/Watt droop curve and (b) Volt/VAr droop curve

Table 7-1 Volt/Watt and Volt/VAr Response modes according to AS/NZS 4777.2:2015

Reference	Australian Default Value (V)	Volt/Watt Response Maximum Output Power (P/Rated) %	Volt/VAR Response VAR Level (VAR % Rated VA)
V1	207	100%	30% leading
V2	220	100%	0%
V3	250	100%	0%
V4	265	20%	30% lagging

AS 60038:2012 defines the allowable steady-state limits for voltage at DNs as 230 volts (+10%,-6%) which can be translated to a maximum voltage of 253 V. Having a default droop setting as 250 V means that the inverter response is only activated at far too high a voltage. In other words, the role of the inverter is limited to a backstop measure rather than an active contribution to the voltage management and/or increasing the hosting capacity. Therefore, the degree of constraint relief by inverters will be minimal in practice.

The AS/NZS 4777.2:2020 standard amends the set points as reported in Table 7-2 and Table 7-3. As can be seen, the voltage set points for the Volt/VAR droop curve have been reduced.

The complete list of the mandatory power quality response mode settings for each Australian state/territory can be found in [94]. Finally, it should be noted that in many cases, the initial supply voltage at a customer's premises, even before the DER connection, is well above the nominal voltage of 230 V. Such high voltages may result in the operation of PQ response modes and lead to the decrease in active power exports of customers. This introduces inequity among different customers which may be supplied by different voltage levels.

Table 7-2 Volt/Watt response mode according to AS/NZS 4777.2:2020

Region	Default Value	V_1	V_2
Australia A	Voltage (V)	253	260
	Inverter maximum active power output level (P) % of S_{rated}	100%	20 %
Australia B	Voltage (V)	250	260
	Inverter maximum active power output level (P) % of S_{rated}	100%	20 %
Australia C	Voltage (V)	253	260
	Inverter maximum active power output level (P) % of S_{rated}	100%	20 %
Allowed range	Voltage (V)	235 to 255	240 to 265
	Inverter maximum active power output level (P) % of S_{rated}	100%	0 % to 20 %

Table 7-3 Volt/VAR response mode according to AS/NZS 4777.2:2020

Region	Default value	V_1	V_2	V_3	V_4
Australia A	Voltage (V)	207	220	240	258
	Inverter reactive power level (Q) % of S_{rated}	44 % supplying	0 %	0 %	60 % absorbing
Australia B	Voltage (V)	205	220	235	255
	Inverter reactive power level (Q) % of S_{rated}	30 % supplying	0 %	0 %	40 % absorbing
Australia C	Voltage (V)	215	230	240	255
	Inverter reactive power level (Q) % of S_{rated}	44 % supplying	0 %	0 %	60 % absorbing
Allowed range	Voltage (V)	180 to 230	180 to 230	230 to 265	230 to 265
	Inverter reactive power level (Q) % of S_{rated}	30 to 60 % supplying	0 %	0 %	30 to 60 % absorbing

7.4 DYNAMIC SETTINGS FOR SMART INVERTERS

The aforementioned problems may necessitate the advanced control of smart inverters by using dynamic setpoints and/or the cooperative coordination of groups of inverters. These have been the subject of recent academic studies and some practical demonstrations. The proposed methods differ based on the control schemes and data requirement needs.

One suitable way is local intelligent control in which the control decisions of smart inverters is improved by providing additional information by, for instance, a central controller. This method requires a minimum one-way data exchange. On the other hand, in an aggregated control approach, a set of inverters can be managed by extensive data exchange through two-way communications. Other schemes have been proposed which require different data requirements. The characteristics of each control method affect its abilities in voltage regulation. For instance, detailed real-time control is capable of responding to fast voltage fluctuations, while an intelligent local control, which exchanges the data on a predefined time scale, is able to respond to voltage issues on larger time frames.

Advanced control of smart inverters has been investigated in different trials. For example, in a pilot project by General Electric (GE) and Pacific Gas and Electric (PG&E) [95], using a distributed energy resource management system (DERMS), the coordinated control of smart inverters and distributed storage for grid support is demonstrated.

Several Australian projects have also explored the coordinated management of smart inverters. One such trial was undertaken by United Energy as a part of the Networks Renewed project to demonstrate the effectiveness of smart inverters in managing voltage issues and providing grid support [96]. Another project [93], in South Australia, investigates the implementation of a decentralised control scheme for setting the dynamic limits for DER units. The specifications of this project are further explained in Section 10.

It should be noted that different technical questions and regulatory issues still need to be addressed in using such approaches. The data security, access to customers' devices, integration of control mechanisms for smart inverters into the existing SCADA systems, and the possible use of a third party for the aggregation and control are among such issues.

More detailed discussions on the shortcomings of present regulations and implementations of PQ response modes can be found in [93]. Moreover, interested readers are referred to [96] for further explanations on theoretical and practical approaches for the control of smart inverters.

8 Other Discussions on Active Grid Voltage Management

There are a wide variety of other topics that are important for DN voltage control and have been examined in some studies. In this section, some of these topics are briefly discussed.

8.1 VOLTAGE CONTROL SCHEMES

Voltage control techniques for DNs can generally be classified into local (autonomous) and communication-based methods [9] [97]. Communication-based methods can be further divided into centralized, distributed and decentralized methods. These control strategies are illustrated in Fig. 8-1 [97].

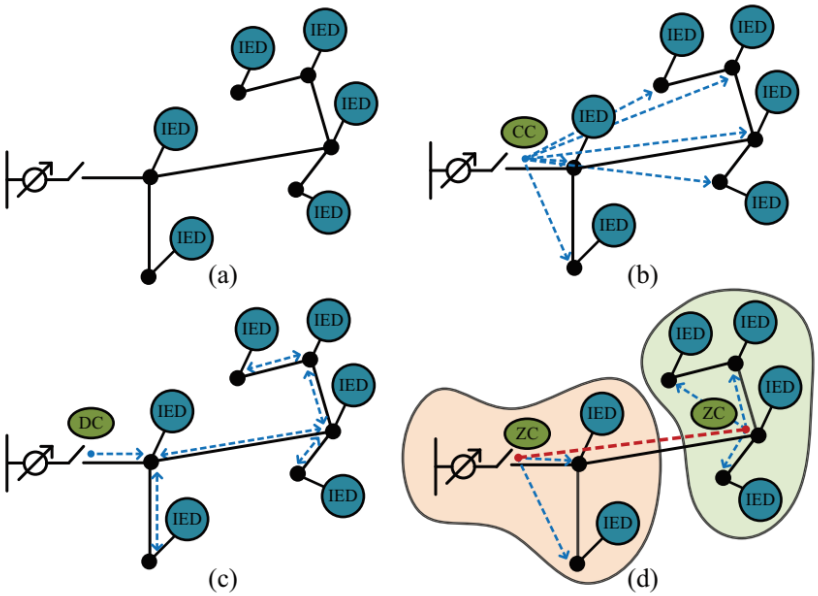

Fig. 8-1 Classification of control schemes based on their communication network [97]: a) no communication, b) centralised control, c) distributed control, d) decentralised control (ZC: zone coordinator)

Local voltage control: in local control, intelligent electronic devices (IEDs) make local decisions based on the measurement of electrical variables such as voltage. For example, a PV inverter can respond to voltage rise by the curtailment of active power or a change of its reactive power. In this method, there is no communication between different components and the response time is fast. On the other hand, the full potential of intelligent devices in the system is not utilised which can lead to non-optimal control solutions.

Centralised voltage control: in centralised control, a central controller receives all the grid measurements provided by smart meters, phasor measurement units (PMUs) and other sensing devices and performs calculations based on the grid conditions and objectives. The new setpoints are sent back to the voltage control equipment to perform the desired actions, for example, change the taps of OLTCs, switch on/off capacitor banks or manage the charge/discharge of ESSs. While this method can achieve better performance, its operation is limited by high investment costs, for example, for measurement devices and it also requires a reliable communication network.

Distributed voltage control: The objective of a distributed voltage control is to reach a self-organised power network with plug and play capability. For this control technique, each IED

communicates only with adjacent IEDs and does not require a central controller for making decisions. Therefore, decision making is achieved through a low-form communication system.

Decentralised voltage control: Decentralised methods inherit some characteristics of both centralised and distributed schemes. In this regard, the control action, computation and decision making is partly centralised and partially distributed. A well-known example, as shown in Fig. 8-1 (d), is the division of the network into several control areas, each one equipped with its own central controller.

Considering the recent advancements in advanced metering infrastructure (AMI) and smart equipment, distributed and decentralised control schemes are suitable options for robust voltage control of future DNs. Interested readers are referred to [97] for a more detailed discussion on the distributed and decentralised control techniques, their characteristics and mathematical approaches, and a review of some of the relevant applications.

8.2 VOLTAGE CONTROL OBJECTIVES

Apart from voltage control techniques, the operational criteria that voltage control acts upon is also important. Various operational objectives related to voltage regulation have been studied in research efforts and practical implementation. Keeping the node voltages within desired limits is generally one of the main objectives. One (or sometimes more than one) of the following objectives can additionally be considered in the problem formulation:

- Minimising voltage deviations of nodes
- Optimising the voltage profile
- Minimising reactive power adjustments on nodes
- Minimising the number of switching operations
- Minimising generation curtailment
- Minimising active power losses

The problems under consideration are usually formulated as linear or non-linear mixed-integer optimisation problems which are solved through various techniques and software tools. The decision variables of such problems are active/reactive power output of DERs, tap positions of OLTCs and LVRs, reactive power set-points of capacitors, voltage setpoints of inverters and the setpoints of FACTS devices.

As an example, a decentralised approach with the objectives of minimising reactive power deviations and maximising active power output is proposed in [98] which utilises the values of active and reactive power of DER units as decision variables. The study presented in [99] develops a distributed voltage control with the objective of the minimum of voltage differences among buses and considers the reactive power of DERs and capacitor banks as optimisation variables.

8.3 MEASUREMENT-BASED (DATA-DRIVEN) METHODS FOR VOLTAGE CONTROL

Most of the proposed strategies for voltage control rely on accurate and up-to-date knowledge of DN models. They work using model-based power flow solutions which can be implemented through different voltage control schemes such as centralised and distributed strategies as were discussed in previous sections. However, the absence of an accurate network model and the operational changes in the network such as topology reconfigurations may result in improper functioning of network control strategies.

The increased installation of measurement devices at distribution level such as micro/distribution phasor measurement units (µ-PMUs or D-PMUs) [100] and smart meters have encouraged some recent studies to contemplate the application of measurement-based models as an alternative. The key

concept is to develop a model that can approximate the non-linear relationship between the decision variables (for example, voltage magnitudes) and the control inputs (such as DG power injections) through a linear model. The parameters of this model are referred to as sensitivities. Real measurement data is then used to estimate these sensitivities using different algorithms such as least-square regressions [101]. A sample structure of such models is shown in Fig. 8-2 [101]. Using the calculated sensitivities, the optimal control set-points can be determined.

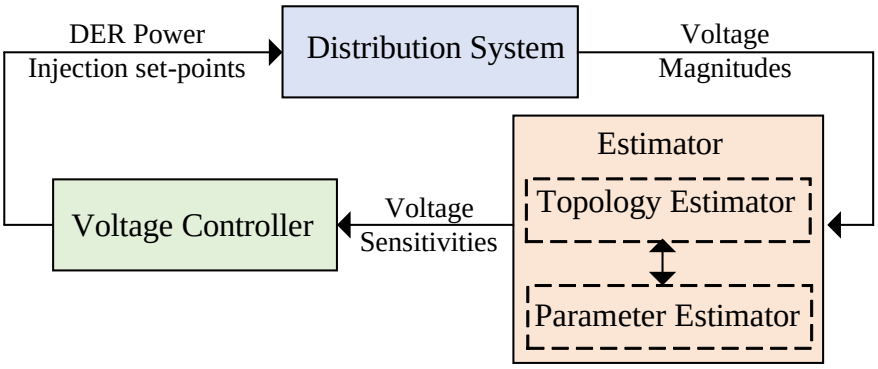

Fig. 8-2 A sample data-driven voltage regulation framework [101]

The study presented in [101] develops a model to identify the DN topology configuration and the feeder parameters using a limited set of measurements of voltage magnitudes and power injections. Study [102] utilises the µ-PMU measurements which are installed on a subset of nodes in the system to develop a measurement-based framework. Active and reactive power set-points of DER units are determined in a way that voltage deviations from reference values are minimised. The model does not require prior knowledge of the network and has lower computational burdens compared with non-linear optimisation problems. Study [103] follows a similar approach for Volt-VAR sequential control where the VAR-voltage sensitivities are approximated using a regression method. The algorithm shows the same performance as the conventional optimisation-based methods while having a much faster calculation speed.

Data-driven approaches are still a new area of research for voltage control at DNs [104] [105] and, considering their advantages and the greater deployments of µ-PMUs and smart meters in the networks, it is expected that they will be gradually introduced to distribution management platforms of DNSPs.

8.4 COORDINATED VOLTAGE CONTROL BETWEEN TNSPS AND DNSPS

The changes in DNs can affect transmission networks (TNs) in different ways. This necessitates a coordinated voltage control that considers the interactions of transmission and distribution systems [9].

The availability of DER units in DNs offers both opportunities and challenges for TNs. An example of positive impact is the ability to procure reactive power locally through DER units installed in DNs. This can prevent investing in reactive devices at TN level and also decrease losses in feeders. This positive impact has been verified in some projects such as the one in the Danish power network [107].

Conversely, under high DER penetration scenarios, reverse power flow from DNs can increase TN voltage magnitudes above the OLTC capability of the zone transformer. A detailed assessment of this phenomenon was investigated in Great Britain [108] in which the historical declining trends of demand, future trends, and network planning issues are considered and the effectiveness of some solutions including the use of shunt reactors at TNs, reducing the operating voltages during critical periods, and exploiting DG reactive power capabilities are assessed. In another study [109], a practical

solution was proposed based on the operation of parallel transformers in small different tap positions (staggered taps) which allows absorbing reactive power at the substation.

DNs can also support TNs in emergency conditions when large disturbances such as critical line tripping or generation outages occur. The DERs can contribute by responding quickly and injecting the required power into the system. The potential of controllable loads such as thermostatically controlled loads, ESS units and EVs can also be utilised to support TNs. In this regard, adequate demand response mechanisms such as direct control methods are devised which respond to emergencies by decreasing the demand.

Furthermore, the importance of transmission-distribution co-simulation methods [110] and/or platforms [111] to comprehend the effects of DNs on the transmission side has been emphasised in some studies. Moreover, the impacts of voltage control actions at distribution systems on voltage stability of the bulk power system are examined in the literature [112].

The coordination between TNs and DNs has been studied using various control mechanisms and mathematical approaches such as model predictive control [113], rule-based methods [114] and distributed optimisation [115]. The discussion of these methods is beyond the scope of this report. Interested readers are referred to [9] for a summary of corresponding works and their technical specifications.

8.5 IMPACT OF HIGH PV PENETRATION ON OPERATION OF VOLTAGE REGULATORS

In distribution feeders, line voltage regulators might be used for regulating the delivered voltage to customers. Reverse power flows can occur on feeders with high DER penetrations. Voltage regulators operate best when they regulate voltage from a strong source to a weak source. The strength of the source can be identified with the driving point impedance (DPI). DPI represents the positive sequence impedance that a regulator encounters during the operation and it is indicative of the relative strength of the sources on either side of the regulator. DPI changes constantly based on the load and generation along the feeder.

The effectiveness of the regulator can be measured by the voltage change per tap or tap-delta voltage. When the source is much stronger than the load side, a percentage tap change in transformer windings will result in the same percentage of voltage change. At higher DER penetrations, the strength ratio of the source to the load approaches each other and the percentage of voltage change dramatically decreases. This situation also increases the reactive power flow and causes higher heating in windings.

Studies have shown that, in the presence of distributed generation, operating based on the direction of power flow may not be the most suitable control methodology for regulators. Instead, these regulators can act more effectively in the direction of DPI [106].

9 International Projects on Hosting Capacity

In this section, some worldwide projects which address the HC in the presence of high penetration of renewables are reviewed.

9.1 HAWAIIAN PROJECTS

The Hawaiian grid is selected for two main reasons: firstly, its characteristics make it relevant to the Australian context (for instance, refer to this AEMO report [116] which has studied the experiences from the Hawaiian grid along with four other networks). Secondly, various studies, addressing PV HC and voltage control in the Hawaiian Electricity network, have been carried out by NREL and their results are publicly available.

9.1.1 Background

Hawaiian networks are leading the USA in integration of rooftop PV systems and Hawaii has set a 100 % renewable energy target by 2045. One of the key technologies in achieving this target is the use of grid-supportive advanced inverters which has been studied in several studies and trials. Specifically, two complementing projects [88] [89] have researched the implementation of inverter grid supportive functions. The projects aimed to address the following questions:

- Which inverter function is more effective for voltage regulation?
- How does smart inverter operation affect customer PV power production?
- What are the impacts of inverter operation on feeder reactive power demands?
- Which of active or reactive power priority is more suitable for the Hawaiian network?

9.1.2 Project specifications

Two representative feeders were selected and QSTS simulations were conducted considering PV growth scenarios. The analysis was performed for four different inverter functions including:

i) reactive power control with constant power factor (0.95 absorbing)
ii) reactive power control with constant power factor (0.95 absorbing) and Volt/Watt mode
iii) Volt/VAR with reactive power priority
iv) Volt/Var mode combined with Volt/Watt mode.

The simulations were performed using a combination of OpenDSS software and PyDSS (a python tool developed by NREL). PyDSS allows flexible modelling of components and/or control functions that are not available at OpenDSS.

9.1.3 Main results

The project results highlight several major findings:

- It was observed that the overall voltage across the feeder improves by using smart inverter functions.
- No adverse effects on the utility equipment such as OLTCs (in terms of the number of operations) were detected.
- The results showed the effectiveness of Volt/VAR over the constant power factor method in regulating the voltage. Moreover, Volt/VAR resulted in less energy curtailment and less reactive power demand at the feeder-head.
- Reactive power priority was more successful than active power priority in preventing momentary overvoltages and thus, its application was recommended for the Hawaiian network.

- At high PV penetrations, even with Volt/VAR functions in place, the reactive power demand of the feeder can increase considerably; the effect of this behaviour on the bulk power system needs to be explored further.
- Annual PV curtailments remain very low when the Volt/Watt function is implemented. In particular, the implementation of both Volt/VAR and Volt/Watt modes can alleviate voltage problems along the feeder and allow interconnection of more PVs.
- The activation of Volt/Watt mode causes less annual PV curtailment.

9.2 PACIFIC GAS AND ELECTRIC COMPANY STUDIES

9.2.1 Background

PG&E has carried out several projects [117] [118] [119] to demonstrate the functionality of smart PV inverters and their impacts on the grid. Namely, extensive studies were performed on two prototype distribution feeders to:

- Evaluate the ability of PV inverters in affecting the secondary and primary voltages
- Identify the customer curtailments due to inverter operation
- Evaluate the reliability of communications in providing visibility and changing the settings of inverters
- Perform lab testing to understand the inverter performance under different grid conditions
- Perform simulation studies and cost/benefit analysis to compare the effectiveness of PV inverter + storage capabilities with traditional upgrades

9.2.2 Main results

The results demonstrated several key findings:

- *Effect on voltages:* The operation of Volt/VAr and Volt/Watt functions helped with the secondary voltage control, however, no significant effect on the average primary voltage was observed. These functions may have a potential beneficial effect in terms of reducing the range voltage values (max/min) on the primary side relative to no curves. Furthermore, the modelling study was not able to demonstrate that the operation of inverters can mitigate the conventional upgrades of the primary network.
- *Complying with standards*: Lab tests suggest that further testing and development is necessary to ensure that smart inverters from different vendors comply with standards.
- *Dynamic settings*: Smart inverters did not always correctly execute the curve settings due to synchronisation and command verification issues.
- *Communication*: The results show that the aggregation platforms and communications are as important as DER themselves if the DERs are to be reliably used for active voltage control. Different issues such as gateway firmware, vendor aggregators and cellular carrier communication can adversely affect system reliability.
- *Customer curtailment*: Curtailment of customer generation due to activation of inverter settings was found to be minimal.
- *ADMS platform*: the integration of smart inverters in ADMS platforms for Volt-VAr optimisation combined with SCADA-enabled voltage regulating devices needs further examination.

10 Australian Projects on Hosting Capacity

Various trials and studies have been undertaken by Australian DNSPs to address the challenges of integrating DGs into their networks. While the previously mentioned methods can be applied to Australian DNs, there are some unique problems that might hinder practical implementations. For example, as highlighted by the Australian Energy Market Operator (AEMO) [120], around 40% of installed PV inverters since 2016 do not comply with some of the mandatory settings prescribed in AS/NZS 4777 and/or DNSP connection agreements. Such issues limit the application of advanced methods for voltage management and HC enhancement.

Considering the importance of HC assessments and network HC enhancements, 11 projects supported by the Australian Renewable Energy Agency (ARENA) were initiated in 2019. The list of these projects and the brief descriptions of their specifications are reported in Table 10-1 [121]. Most of these projects are still underway and more results will be available in the near future which can increase the related knowledge relevant to the Australian electricity network.

Table 10-1 Australian projects studying HC assessment and enhancement [121]

Name of Project	Lead organisation/ Location	Description
Community models for deploying and operating DER	Australian National University/ ACT, QLD, TAS, VIC	The project aims to provide the basis for greater adoption and deployment of community energy models in Australia. Specifically, the simulations show that community energy storage (CES) may allow increased DER penetration.
Distributed energy resources hosting capacity study	CitiPower & Powercor/ VIC	This project uses publicly available analysis tools in combination with smart meter data at a 30-minute level, and other network, customer and weather data sets to assess limitations and the most cost-effective opportunities for increasing HC on the network. 10 LV network topologies, covering the main LV systems across the studied area, were developed. The project also focused on the limitations in assessing unbalanced LV networks and single-phase systems, as the tool is limited to the assessment of balanced three-phase systems at this time.
National low voltage feeder taxonomy study	CSIRO/ National	This project aims to develop the first nationally representative taxonomy of LV networks. It gathers and summarises key characteristics of Australian LV networks at a regional level. It will integrate DER models (PV, battery ESSs, and demand response) into custom-built power-flow models unique to each LV network type.
Distributed energy resources feasibility study	Dynamic Limits/ NSW, SA	This project studies implementing dynamic distributed energy resources export limits to better manage voltage and thermal constraints on the electricity network. The study consists of a general technical feasibility study, as well as two site-specific feasibility studies examining feeders with both thermal and voltage constraints.
Demonstration of three dynamic grid-side technologies	Jemena/ VIC	This project demonstrates how increasing the visibility of LV networks can help manage grid power and voltage fluctuations. Three grid-based technologies are being assessed: ▪ Dynamic phase switching of customer loads on LV feeders to help mitigate localised over-voltage challenges; ▪ Dynamic power compensation to adjust the output voltage and mitigate load unbalance; ▪ Battery energy storage with virtual synchronous generator (VSG) capability to mitigate potential power quality and network stability challenges.
Pricing and integration of distributed energy resources	Oakley Greenwood/ NEM-Wide	This project investigates methods by which price signals can better reflect the value that DER services can provide to the electricity supply chain to make investments in DER in locations and at scales where it is most needed.
Advanced VPP grid integration	SA Power Networks/ SA	This project demonstrates how higher levels of energy exports from customers' solar and battery systems could be enabled using dynamic, rather than fixed, export limits. Real-time and locational data on distribution network capacity are exchanged between SA Power Networks and Tesla, enabling Tesla's 1,000-customer VPP to increase its output when there is available network capacity.

Name of Project	Lead organisation/ Location	Description
Enhanced reliability through short-time resolution data	Solar Analytics/ NEM-Wide	This project aims to improve the monitoring capabilities of voltage disturbances, as well as automating short-time data capture transfer triggered by grid events. This will allow for increased visibility, predictability and/or potential control of DER. Analysis of the high-resolution data enabled AEMO to identify specific behaviours of small-scale PV systems during frequency and voltage disturbances.
Advanced planning of PV-rich distribution networks study	University of Melbourne/ VIC	The aim of this project is to develop innovative analytical techniques to assess network HC of solar PV by using readily available HV network and customer (smart meter) data. The study starts with the development of detailed full three-phase integrated HV-LV network models to quantify the impacts of various solar PV penetrations on network performance. Then, using these models, the University will explore how to quickly estimate PV hosting capacity without the need for complex and detailed network studies.
Optimal der scheduling for frequency stability	The University of Tasmania/ TAS	This project aims to demonstrate via detailed modelling the frequency response capabilities of a range of inverter-interfaced DER and flexible loads, and the extent to which they can assist with frequency stability in power systems.
evolve DER project	Zeppelin Bend/ ACT, NSW, QLD	This project is developing mechanisms to orchestrate the operation of DER assets by continuously providing 'operating envelopes' to the DER via integration with aggregator systems.

In the following sections, specifications and main outcomes of some of these projects are summarized.

10.1 DISTRIBUTED ENERGY RESOURCES HOSTING CAPACITY STUDY BY CITIPOWER AND POWERCOR [10] [70]

10.1.1 Project description

This DER hosting capacity study examines the PV HC of ten representative LV networks managed by CPPAL. The study is performed in the following stages:

A. Selecting 10 example networks:

The networks have been selected from more than 80,000 LV networks managed by CPPAL based on their topologies and other features that influence HC. These features included the distribution transformer rating, number of customers on the LV network, HV feeder type, and conductor type. Table 10-2 shows the final categories and their specifications.

Table 10-2 Representative LV networks and their characteristics

Category name	Description	Transformer kVA rating	Number of customers	Feeder type	Conductor type	Number of customers mapped to this category
High- density indoor	High density commercial and urban	1000	Any (~1–100)	Any	159mm (0.25 in) 3/c cu plysws	~150k
URD kiosk	Residential estates, underground cabling	315	>50	Any	185mm 4/c lv.sa.x	~140k
Mid-density pole Mid-density	Mid-density commercial and urban	500	>10	Urban, Rural Short	4-19/3.25 AAC	~180k
C&I pole	Commercial and industrial	500	<10	Any	4-19/3.25 AAC	~15k
Urban pole	Metro urban	315	>50	Urban	150mm LV ABC	~390k

Category name	Description	Transformer kVA rating	Number of customers	Feeder type	Conductor type	Number of customers mapped to this category
Urban C&I pole A	Commercial and industrial	315	<50	Urban	150mm LV ABC	~15k
Urban C&I pole B	Commercial and industrial, with a modified conductor type	315	<50	Urban	4-6/.186,7/062 ACSR	~15k
Mid-density rural pole	Mid density rural setting — small properties (in town)	100	Any (~1–10)	Rural Long, Rural Short	4-6/1/114 ACS	~90k
Low-density rural single phase	Lower density rural — large properties	50	Any (~1–10)	Rural Long	3-7/.064 Cu	~90k
Remote rural SWER	Single rural customer — farming/ remote	10	Any (~1)	Rural Long	2-7/.064 Cu	~30k

B. Building power flow model for representative networks:

Using AMI, geospatial and topological data, a power flow model was built for each of the representative LV networks. AMI data included the load curves of customers and voltages recorded for a period of 12 months.

The operation of network equipment and phase imbalance caused differences between simulated and historical voltages. These included the operation of on-load tap changers in ZSSs (This operation cannot be recreated perfectly given new steady-state modelling conditions, because tap position depends on recent events at the ZSS), off-load tap changers of DSSs (position is unknown) and phase imbalance (customers' phase allocation is not known). Modifications are made to accommodate each of these unknown variables.

C. Performing power flow studies for each network under increasing PV penetration:

Five random scenarios were considered to examine the uneven distribution of PV both within the LV network and across the entire HV feeder. Power flow studies were run on a 30-minute basis. For each incremental increase of PV penetration, approximately 8,000 power flow simulations were performed.

D. Assessing the HC

In this study, HC is measured based on the maximum voltage limits and equipment thermal constraints and is characterised based on three metrics:

- The level of PV penetration when the first breach occurs;
- The duration of breach: The LV grid's annual average number of hours per day, with at least one customer in breach and
- The severity of the breach: The increase in annual maximum observed voltage at customer's premises as PV penetration increases.

E. Evaluating the techno-economic performance of five mitigation measures to enhance HC:

The performance of five different measures including three network augmentation solutions and two customer-side measures were analysed. These techniques and their specifications are outlined in Table 10-3.

Table 10-3 Mitigation measures for enhancing HC

Mitigation measure	Mitigation measure type	Description
Transformer upgrade / reconductoring	Network augmentation	Replace the distribution transformer to include an off-load tap changer with additional manual buck taps, increase the distribution transformer rating (where possible) and increase the quality of any connecting LV conductor (where possible).
On-load tap changer (OLTC)	Network augmentation	Replace the existing transformer with a transformer fitted with an OLTC. An OLTC automatically adjusts voltage at the distribution substation (DSS) based on load characteristics on the LV network. This is also known as dynamic voltage control (DVC) and is more commonly installed at the zone substation (ZSS). Also, increase the rating of the distribution transformer (where possible).
Low voltage regulator (LVR)	Network augmentation	Install LVR(s) on the LV network that use a controllable transformer to increase or decrease voltage on the LV network.
Smart inverter	Customer-side	Enable an inverter (with associated Volt-VAR and Volt-Watt settings) alongside each PV system that has extended capabilities to sense and react to grid voltage by adjusting the real and reactive power exported from the PV system.
Behind-the-meter batteries	Customer-side	Install a battery behind-the-meter alongside each PV system. Batteries store and time-shift energy. In this study, they are assumed to be operated to maximise customer self-consumption.

Among these solutions, transformer upgrade/reconductoring and smart inverters are already implemented by DNSPs. LVRs and batteries are in their early rollouts and are increasingly deployed in the system. Implementations of OLTCs are in the planning phase and have been also tested in pilot/demonstration projects.

10.1.2 Main results

The HC metrics showed significant variability across representative networks. For example, the PV level in which the first breach occurred ranged from 0 to 100% among the networks. The results also emphasise the necessity of HV voltage regulation on long MV feeders.

The study of mitigation measures showed the effectiveness of network augmentation measures at enhancing PV penetration level and reducing the duration of the breach. On the other hand, smart inverters were found to be more effective at reducing voltage rise. The study also suggests that the highest net-benefit is respectively realised by smart inverters at low penetration levels and by transformer upgrade/reconductoring when the PV penetration increases. Table 10-4 presents a summary of the techno-economic performance of each mitigation method.

10.1.3 Further observations from this project

Several observations and directions can be inferred from the project findings which have been summarised in the following:

- The availability of AMI data for customers in this specific project (located in Victoria where most customers are equipped with smart meters) improved the project outcomes in several ways including in power flow simulations through ability input the actual load patterns to the model and validation of the power flow results by comparing the obtained results with actual values.

- Even with AMI data, the customer phase connection is still not known for most DNSPs which introduces errors to the modelling process and achieved results. In this project, the power flow model is built based on the balanced three-phase load. Phase imbalance was attempted to be captured as a post-processing step.

Table 10-4 Summary of the techno-economic performance of each measure

Mitigation measure	PV penetration at first breach	Average hours per day in breach	Maximum voltage levels (voltage rise)	Cost-benefit analysis
Transformer upgrade / reconductoring	Increases the PV penetration at first breach of six LV networks	Significantly reduces hours in breach	Reduces maximum voltage levels	The best option in many cases, but only for LV networks with more than a few customers
OLTC	Increases the PV penetration at first breach of six LV networks	Significantly reduces hours in breach	Reduces maximum voltage levels	Highest net-benefit for one LV network due to extreme voltage rise, superseded by LVR at higher PV penetration levels
LVR	Increases PV penetration at first breach of six LV networks	Significantly reduces hours in breach	Reduces maximum voltage levels	Highest net-benefit for one LV network at high PV penetration levels due to extreme voltage rise
Smart inverter	Increases PV penetration at the first breach of two LV networks Very minor improvements in all other example networks	Slightly reduces hours in breach	Significantly reduces maximum voltage levels	Highest net-benefit at low PV penetration levels due to low cost, but has limited benefits at high PV penetration levels due to a high level of curtailment
Battery	No improvement in any of the example networks	Slightly reduces hours in breach	Slightly reduces maximum voltage level	No benefit for any LV network under this study's assumptions

- The simulations were performed by Python which is open-source software. The PV generation calculation and power flow modelling were conducted using "pvlib" and "Pandapower" libraries, respectively. This allows the reproduction of methodology by other DNSPs or research groups.
- While the ten selected networks represent different popular DN categories, it is hard to generalise the results for all LV networks due to the large diversity that exist among DNs.
- Based on the project's outcomes, several recommendations have been made. The study suggests allowing for flexible/dynamic export limits for PV inverters. Another recommendation is the upgrade of transformers during replacement activities, especially increasing the buck tap range of off-load tap changers which shows much more beneficial effects on voltage than increasing the transformer rating or reconductoring. The project also shows that operation of batteries, if not managed as a group, cannot positively affect HC. Therefore, it endorses the coordinated management of a fleet of batteries. Finally, as the outcomes show, no single measure can solve all the problems of PV penetration and therefore, several different solutions should be used simultaneously to enhance PVHC.

10.2 ADVANCED PLANNING OF PV-RICH DISTRIBUTION NETWORKS BY THE UNIVERSITY OF MELBOURNE [122] [17] [18] [123] [124]

10.2.1 Background

This project undertakes detailed PV HC analysis of representative rural and urban distribution feeders. The project was carried out in several stages including:

- Selecting and modelling 2 rural and 2 urban feeders in OpenDSS software and performing benchmark time-series power flow studies.
- Investigation of new methods for fast HC estimation of PV-rich DNs: an analytical approach based on data analysis techniques was proposed for estimating PV HC and its performance examined for growing PV penetration levels over a period of 5 years.
- Analysing the effectiveness of traditional solutions for PV HC enhancement: The set of traditional solutions includes the adjustment of off-load tap changers of distribution transformers, adjustment of OLTC in zone substation transformers, network augmentation, and use of smart inverters which are set according to new Victorian standards.
- Analysing the effectiveness of non-traditional solutions for PV HC enhancement: The studied solutions include the use of strict inverter settings, LV transformers equipped with OLTCs, BESS systems with and without smart controllers, and utilization of dynamic voltage regulation in zone substations.
- Cost-benefit analysis of combined approaches for increasing PV HC: Six different combinations of traditional and non-traditional solutions are evaluated and the corresponding cost/benefit analysis for each one is performed.

Based on the obtained results, planning recommendations are proposed for network designers and operators.

10.2.2 Project description

Selection and modelling feeders: In the first stage of the project, in collaboration with AusNet Services, the characteristics of 351 HV feeders were analysed to select 4 suitable feeders for further studies. Six key characteristics were considered for selecting the representative feeders including the type of feeder (urban/rural), length, maximum loading, number of customers, PV penetration level, and availability of (smart meter) data of the feeders. The characteristics of the selected feeders are summarized in Table 10-5.

Table 10-5 Characteristics of selected feeders

Name	Type	Length (km)	Max Loading (%)	Customers (#)	PV Penetration (%)	Smart meter data quality
R1	Rural	485	60	3223	21	Good
R2	Rural	277	85	3977	18	Good
U1	Urban	34	50	3125	20	Good
U2	Urban	20	94	5161	22	Good

In the next step, the HV feeders and their LV networks were modelled in OpenDSS. To model customer loads, a pool of daily load profiles was created based on the outcomes of a previous project. This daily load database was used to assign randomly selected profiles to the customers (based on residential, commercial, or industrial categories). Finally, unbalanced time-series simulations over a 24-hour time span for a peak demand day were performed. The results are analysed to understand the situation of the network, possible voltage/loading violations, and used as the benchmark for further

studies. The results show that in general, the feeders have no significant voltage and congestion problems. However, during peak periods, over utilisation of assets occurs.

HC estimation: As explained in previous sections, HC assessments are important for DN planning but these assessments impose high computation burden and time on DNSPs if they are going to be applied to every individual feeder. Hence, the second phase of the project investigated the applicability of a simpler approach for HC assessment. The proposed methodology is based on a linear regression model with the maximum voltage and the total power of the feeder as its independent (input) and dependent (output) variables as shown in the following:

$$V_{max} = a.P_{agg} + b$$

where

- V_{max} is the maximum voltage that can occur at a certain time of the day
- P_{agg} represents the aggregated power from all smart meter data for that time instance. P_{agg} decreases by increasing the PV levels and can take a negative value. The model, therefore, shows what aggregated power level can lead to voltage values outside the allowable limits.
- b is the y-axis intercept.

Building an accurate regression model, however, requires access to sufficient smart meter data for successive years. This is especially important to measure the accuracy of the model in predicting maximum voltages for different PV penetration levels. Therefore, based on the available smart meter data, a database was generated which consisted of half-hour data for a period of 5 years with increasing PV penetration. PV uptake trends are modelled through three different methods including random, head to end, and end to head uptake models. In random uptake, PV generators are randomly assigned to customers in different parts of the feeders. Head to end and end to head represent extreme scenarios in which PV systems are first allocated to customers closer to the head of the LV feeders (maximum HC) and the far end of LV feeders (lowest HC), respectively.

Traditional solutions: The third stage of the project studied the performance of traditional techniques in improving the PV HC. The possible approaches and their implementations are explained in the following:

- The first solution was to adjust off-load tap changers of LV transformers to decrease the voltage levels across all customers to the lowest allowable value. This approach affects all customers supplied by the transformer.
- The second approach involved decreasing the OLTC target voltage at the zone substation. This method unlocks additional voltage headroom for more PV adoptions and it also affects all customers supplied by the zone substation.
- Network augmentation by replacing conductors and/or transformers with higher rating ones is another traditional solution that can alleviate voltage and congestion issues.
- Finally, the use of PV power quality response modes for managing voltage regulation was investigated. Based on the new mandate in Victoria, both Volt/Watt and Volt/VAR response modes (set based on AS/NZS 4777.2:2020) need to be enabled. The settings based on the new Victorian standard are shown in Table 10-6 and Table 10-7.

Table 10-6 Volt/Watt settings based on Victorian standard

Reference	Voltage (V)	Power % of rated power
V_1	253	100 %
V_1	259	20 %

Table 10-7 Volt/VAR settings based on Victorian standard

Reference	Voltage (V)	Power % of rated power
V_1	208	44 % supplying
V_2	220	0 %
V_3	241	0 %
V_4	253	44 % absorbing

The performance of each of the solutions was measured based on three metrics including voltage and overload issues and PV curtailment levels.

Non-tradition solutions: The next phase of the project examined the application of non-traditional solutions for voltage management and PV HC enhancement. These techniques, however, are used only when traditional solutions would not be able to accommodate the newer PV installations to minimise the investment costs. The examined techniques include:

- Adopting the stricter Volt/Watt and Volt/VAR settings for inverters with the settings as shown in Table 10-8 and Table 10-9 which curtails output power of inverter completely for overvoltages above 253 V.

Table 10-8 Stricter Volt/Watt settings

Reference	Voltage (V)	Power (%) of rated power
$\boldsymbol{V_1}$	207	100 %
$\boldsymbol{V_2}$	220	100 %
$\boldsymbol{V_3}$	251	100 %
$\boldsymbol{V_4}$	253	0 %

Table 10-9 Stricter Volt/VAR settings

Reference	Voltage (V)	Power (%) of rated power
$\boldsymbol{V_1}$	208	44 % (leading)
$\boldsymbol{V_2}$	220	0 %
$\boldsymbol{V_3}$	241	0 %
$\boldsymbol{V_4}$	251	44 % (lagging)

- Replacing LV transformers with OLTC-equipped transformers with adaptive control: The control method use the smart meter data of all customers to consolidate opposing voltage problems in the network and bring all voltages to a middle point.
- Use of off-the-shelf BESSs in households with PV
- Use of BESSs in households equipped with an advanced controller (Network Smart BESS): the controller limits the PV exports based on the network situation. The controller considers a variety of factors such as PV generation, and charges and discharges the BESS to ensure there is enough capacity to store PV excess generation during the day.
- Dynamic voltage control at zone substation: the voltage output settings of the transformer can be varied based on the net power flow through the zone substation (which indirectly indicates the aggregated PV production in the network).

10.2.3 Main results

Results of proposed HC estimation: The results show that for lower PV penetration, up to 30 %, the model error is high. However, increasing the PV penetration to more than 40% increases the model accuracy significantly. The results are shown in Table 10-10 for a sample LV feeder.

Table 10-10 Performance of HC estimation (for random PV uptake model) [ref]

Penetration Level (%)	10	20	30	40	50	60	70	80	90	100
Accuracy error (%)	42	24	40	18	18	8	9	2	0	1

Results of traditional solutions: The results highlight the measure of the effectiveness of each method as summarised in the following:

- Adjusting off-load tap changers is highly effective for urban and short rural feeders in mitigating voltage problems. By decreasing voltage levels, it also prevents PV curtailments significantly.

- Adjusting the voltage level of zone substation OLTCs shows only slight benefits when deployed at the same time as the first solution (adjusting off-load tap changers).

- Results show that overload problems mostly affect LV transformers rather than conductors. In this case, LV transformers face overload issues at lower PV levels (less than 40 % PV penetration) while conductor congestions happen at higher levels (above 80 % PV penetration). Therefore, augmentation might be necessary for those over utilised transformers.

- Utilising PV inverter power quality response mode capabilities is highly effective in limiting overvoltage problems in both rural and urban feeders, keeping the maximum voltage below 1.12 p.u across all feeders. It was also observed that PV curtailments are very low for all studied PV penetration levels (less than 2 %). However, enabling PV inverter power quality response modes can increase the utilisation of assets due to the absorption of large amounts of reactive power by inverters. This can lead to the LV transformer overload at much lower PV levels compared to the case when the Volt/VAR function is not used. This function also creates problems in maintaining the power factor within the limits at the transmission-distribution interface.

The simulation findings show that traditional methods can be an effective solution for up to 40 % PV penetrations. Beyond this, the applicability of these approaches will be limited by both voltage and congestion issues.

Results of non-traditional solutions: The findings of the proposed techniques are outlined in the following:

- The tailored power quality response modes were shown to be very effective in alleviating network problems. PV curtailment increased by roughly 1 % compared with the Victorian mandatory settings, although, it never exceeded 2% of total PV generation. Again, the reactive power absorption, can cause overload problems and exacerbate power factor in the network.
- The use of OLTC-fitted LV transformers were showed to be highly effective in solving various voltage issues and increasing the HC up to 100 % levels. It also leads to negligible curtailments. It should be noticed that is a very costly option and requires the replacement of a considerable number of LV transformers.
- The use of off-the-shelf BESS systems with any network-oriented control schemes were showed to have no significant effect on voltage issues of DNs. This is mainly due to the fact that BESSs reach their upper storage limits early during the day and cannot prevent PV exports.
- Network smart BESSs showed a very promising response in solving voltage issues, decreasing asset utilisation, increasing PV HC to 100 %, and limiting PV curtailments. This technique slightly increases the energy import of the customer. However, the benefits will be significantly higher compared to network augmentation solutions. Therefore, customers can be remunerated by proper incentives for their participation in this service.

- Utilisation of dynamic voltage levels for zone substations can be effective in solving some voltage violations in LV feeders. However, this methodology faces different problems such as voltage control where several HV feeders with different characteristics are connected to the same transformer. Additionally, the limited number of taps cannot always provide enough headroom for voltage management.

10.2.4 Further observations from this project

An important issue in the HC estimation is the volume of smart meter data. The performance of the regression model can be measured using the coefficient of determination (R^2). More data reflecting more diverse network conditions improves model accuracy. For example, R^2 increases from 0.47 to 0.75 by increasing the number of days that are used for training the model from 20 days to 30 days.

As mentioned previously, the proposed HC estimation model suffers from high errors for PV uptakes less than 30%. Since most of the DNs are experiencing PV penetration levels around 20%, the priority for DNSPs (for the next decade) is to calculate HC estimations for PV uptakes between 20%-40%. Therefore, the proposed model might not assist in accurate HC estimations in the current situation.

Adjustment of off-load tap changers and zone substation OLTCs as traditional solutions for HC enhancement might cause under voltage problems during periods of heavy load. This situation can be exacerbated by the adoption of EVs which is expected to heavily increase the network demand in upcoming years.

The proposed adaptive smart controller improves significantly the overall operation of the network, however, its proper operation is uncertain since it relies on predicting PV and load characteristics.

10.3 DEMONSTRATION OF THREE DYNAMIC GRID-SIDE TECHNOLOGIES BY JEMENA AND AUSNET [125] [126]

10.3.1 Background

This project aimed to demonstrate three novel technologies and intelligent control systems to improve the HC of DNs. The demonstrations were carried out on two LV networks with different characteristics belonging to Jemena and AusNet services.

The tested technologies were:

- Dynamic phase switching of customer loads by phase switching device (PSD) (14 in each test DN)
- Dynamic power compensation at distribution transformer by power compensation device (PCD) (one in each test DN)
- Battery energy storage system (BESS) with virtual synchronous generator (VSG) (only one in Jemena DN)

The first two technologies, which can help in balancing the network, are new to Australia but have been deployed extensively in some countries, for example, by the State Grid of China. In addition to the aforementioned devices, a central controller was used in each network which communicated with these devices and managed their operation.

Fig. 10-1 shows how equipment was installed in different parts of DNs.

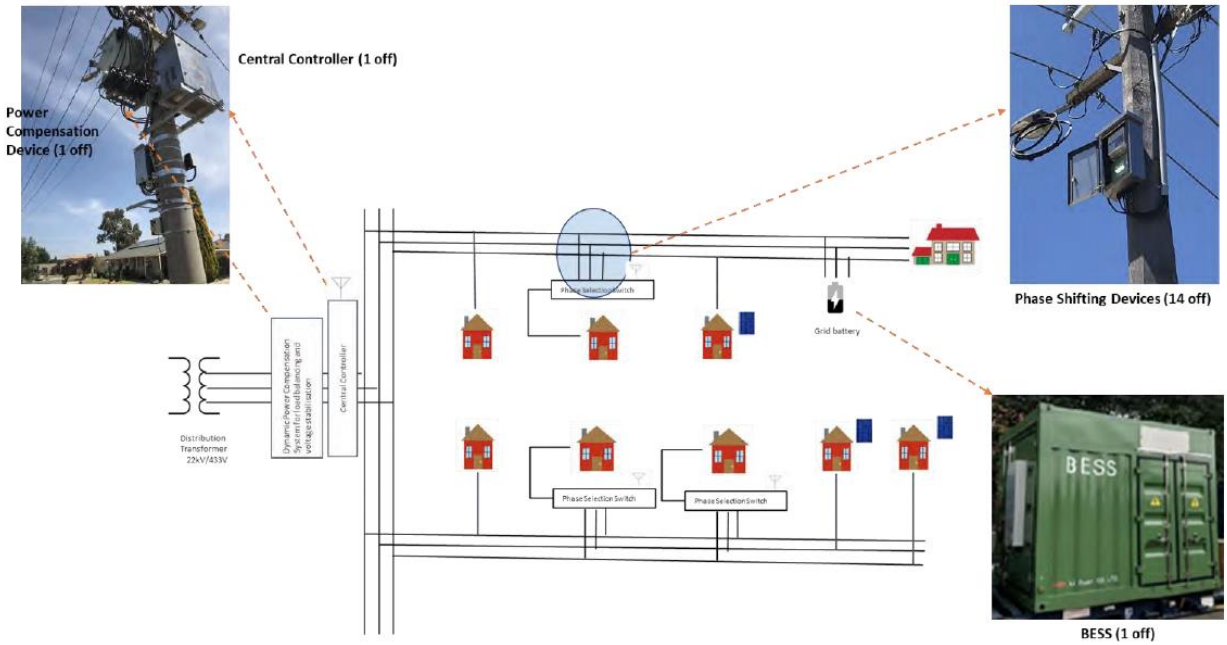

Fig. 10-1 Three different technologies implemented in LV networks (BESS is deployed only in Jemena DN) [125]

This trial aimed at studying several aspects, specifically:

- Observing the effectiveness of the applied technologies in enhancing the hosting capacity of networks.
- Understanding how the results can be applied to other network types.
- Executing a cost-benefit analysis to understand the potential of technologies for real implementations.

10.3.2 Project specifications

The specifications of each of the applied technologies are summarised in the following.

PSD: The PSD is a pole-mounted device that switches customer loads dynamically between phases in less than 10 ms. The PSDs responds to under voltage/overvoltage situations which can be caused by peak demand/excess generation in the network. PSD measures the current and voltage of the customer and each of the phases. When the load current is zero, PSD disconnects the load and then, connects it to the other phase when the phase voltage is zero.

Each PSD communicates with the central controller through a wireless communication system.

PCD: PCD is connected in parallel to the secondary side of the distribution transformer. It uses power electronics technology to achieve phase balancing by providing active load transfer between the phases and dynamic inductive/capacitive reactive power compensation. Therefore, the transformer observes a balanced load with near unity power factor and the voltage in the downstream network will also be improved. In addition, the very fast dynamic response of PCD enables it to regulate the transformer output voltage when transitory voltage disturbances occur.

The PCDs used in the project have a rated power of 100 kVA and a maximum unbalance compensation of 150 A and can act based on one of the four modes of operation including active power, reactive power, complex (active and reactive power), and manual (selection of kVAR).

BESS: BESS is used to mitigate potential stability issues or power quality problems in the network. The project utilised a 100 kW/ 200 kWh BESS. Different aspects were considered in the design and

operation of BESS further details of which can be found in the project reports. The BESS operation was controlled by the central controller.

Central controller: The central controller monitored the system status and if the unbalance in the system due to the changes in the load or generation exceeded a set threshold, it exerted a coordinated control on PSDs and/or BESS to mitigate the problem. The central controller acted on five control strategies to achieve this coordinated control as follows:

- Overvoltage control strategy
- Undervoltage control strategy
- Battery SoC control strategy
- Transformer overload control strategy
- Transformer reverse power flow control strategy

As an example, the overvoltage control strategy is shown in Fig. 10-2.

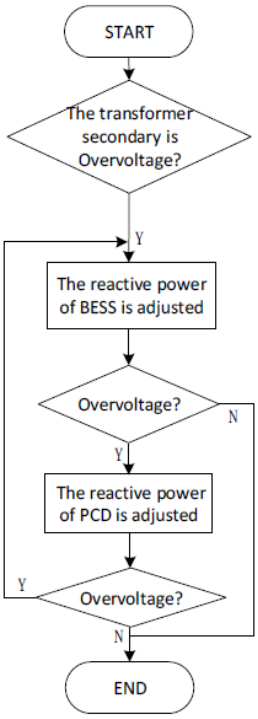

Fig. 10-2 Overvoltage control strategy for coordinated operation of BESS and PSDs [125]

The project comprised of several steps. In the first stage, the necessary data such as historical load data and physical data of the network was gathered and unbalanced power flow models for the DNs were developed. Also, based on studies, optimal locations for PSDs in the network were decided.

In the second stage, the performance of PSD and its effect on customer appliances was analysed through extensive laboratory testing. In this regard, 30 different appliances, 42 individual operation states, and 12 combined operation states were studied. Specially, the operation of air conditioning systems, fridges, freezers and pool pumps under the phase switching were analysed carefully.

The third stage was dedicated to the design, installation, and commissioning of devices. Since the equipment was new to the Australian network, modifications were made to improve the devices' performance, for example, on their control strategies and to satisfy network requirements.

10.3.3 Main Results

In general, the project shows the effectiveness of the applied technologies in balancing the load and consequently, increasing PVHC. The main results based on studies and laboratory testing are as followed:

- The majority of appliances showed normal operation under phase switching. However, some negative impacts were observed on some appliances when the direct negative sequence switching was used as the switching logic. Therefore, it was suggested that consecutive positive sequence switching be used in the device control system which was accordingly applied by the supplier.
- To further limit the impacts on customer appliances, a two-stage control mechanism including the day-ahead and real-time controls was considered for PSDs. At the first stage, PSDs are set on the periods when the least number of appliances are working for example, at 2 am. This is done by forecasting the load profile, PV generation, network status, and operational requirements. In the case that the actual status of the network differs significantly with predicted values which causes unbalance and voltage violations, the real-time control would act. Furthermore, the number of PSD actions for each customer was limited to a certain number.
- The project will analyse the effectiveness of different control strategies in responding and mitigating network problems. Additionally, the effectiveness of the BESS system during transients will be studied.

10.3.4 Further observations from this project

The specifications of the communication system and its integration with current SCADA systems were an important part of the project. Therefore, attention was paid to developing a secure communication system, reliable remote monitoring and autonomous control capabilities.

Considering system monitoring, AusNet and Jemena followed two different approaches. AusNet adopted the vendor-supplied monitoring system while Jemena integrated a new telemetry system into their existing SCADA system. The latter approach needed much more effort to test the interoperability of the new system with the SCADA system.

The project illustrated that adopting novel technologies that require data communications with DN management systems such as smart inverters, demand response management systems and EVs and integrating them with the existing SCADA systems pose challenges for DNSPs. Specifically, these services might be provided by different providers or third parties with their different specifications. Therefore, the results of this project can help in understanding and dealing with such issues

10.4 DISTRIBUTED ENERGY RESOURCES FEASIBILITY STUDY BY DYNAMIC LIMITS [93]

10.4.1 Background

This project investigates the specifications and feasibility of a distributed control scheme to implement dynamic limits for DER units such as settings for PV inverters. The project particularly considers the outcomes and recommendations of the Open Energy Networks (OpEN) Initiative for proposing suitable control methods. The OpEN Initiative examines and defines the possible roles, platforms, frameworks, and models for the dynamic control of DERs.

The control scheme is mainly developed for rural and regional feeders but the obtained results are beneficial for developing similar platforms for other feeder types. The control strategy has four key components - a network sensor, open network data platform (ONDP), dynamic limits profile (DLP) and DER controller. The project evaluates the characteristics of each component, the benefits of the method, and its alignment with the recommendations of OpEN project. Finally, the implementation of the project scheme at two sites in the Essential Energy DN is studied.

Furthermore, the project report provides a discussion on network constraints including voltage and thermal constraints, the existing static limits and PQ response modes as specified in Australian standards and their deficiencies, and a review of a number of Australian and international initiatives.

10.4.2 Main Specifications of the project

The main specifications of the project are explained below:

Alignment with OpEN Project proposals: The project follows the three required capabilities and enabling actions which are defined by OpEN Project (EA Technology Report) [127] and the set of "least regret" capabilities and milestones outlined by OpEN's Interim Final Report [128] to achieve DER optimisation on DNs as shown in Fig. 10-3.

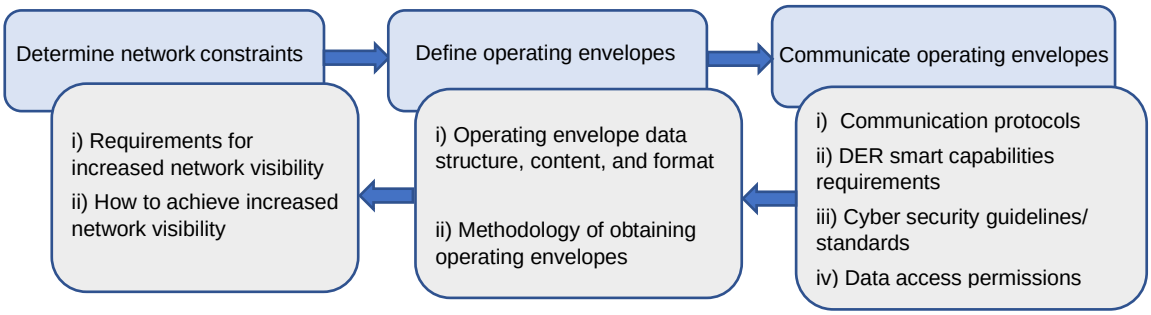

Fig. 10-3 Capabilities and enabling actions for improving DER integration [93]

Management of local network constraints as the primary control function: This means that managing the network constraints such as overvoltage and overload has priority over "DER Orchestration". DER orchestration refers to the control of a group of DERs for achieving a specific outcome, for example, acting as a VPP for bidding in the market or for network support services such as frequency control ancillary services. However, in special cases when system security is jeopardized, the control scheme allows the network constraints to be temporarily violated.

Specific challenges of rural and regional networks: The specific characteristics of rural and remote networks such as the sparsity and potential lack of proper communication networks is another feature that has been considered in the control scheme design.

10.4.3 Key components of the control scheme

The proposed control strategy comprises of four main elements as follows:

Network sensor: These sensors are used for measuring the actual operating constraints of the network, either thermal constraints or voltage constraints. Therefore, the control scheme relies on the actual measurements rather than the network model.

Open network data platform (ONDP): This platform has two main functionalities. The first is to collect the data from sensors and the second function is to enable DNSPs to manage sensors and DER controllers. ONDP can also provide interfacing between the DER and other stakeholders for other tasks such as DER orchestration.

Dynamic limit profile (DLP): Pre-assigned DLPs are used to manage DER actions. The DLP acts as a predefined operating envelope for the DER across the full range of possible DN states specifically, addressing the allowable export or import capacity limits of DER. DER responds to a network state, for instance, the case when a network constraint is approaching based on the defined DLP.

DER controller: The local DER controller stores the DLP, receives data from network sensors via ONDP, and implements the DLP based on the network condition.

10.4.4 Main results

Two real rural network models including a semi-rural village for thermal constraint study and a long rural feeder for voltage constraint study and one hypothetical model consisting of a single rural house with a long LV supply were used to study the impact of the proposed dynamic limit model on increasing HC.

The studies show that the application of proposed control scheme for rural and remote networks is able to improve the network's HC significantly, increasing the DER installation size by three to five-fold.

10.4.5 Further observations from this project

- The scheme uses actual network data on constraint locations rather than using state estimation methods to estimate network constraints.
- The use of predefined DLPs make the scheme different to other suggested methods that continuously calculate the operating envelope and communicate it to the DER controllers.
- An advantage of the scheme is its ability to record the DER behaviour, therefore, increasing the visibility of DERs and ensuring their compliance with standards. The DER controller can generate regular reports summarising the key information of DER operation. This data can be shared with relevant stakeholders through ONDP.
- One key challenge that needs to be addressed for the implementation of the scheme (and other similar methods) is data privacy and confidentiality provisions.

Integrating the control scheme with the existing SCADA and distribution management systems of DNSPs is another key issue.

10.5 EVOLVE PROJECT: ON THE CALCULATION AND USE OF DYNAMIC OPERATING ENVELOPES [129]

10.5.1 Background

This project demonstrated the use of dynamic operating envelopes (DOEs) for managing DERs throughout the grid based on the network conditions. The DOEs are, in essence, the upper and lower bounds for each individual DER (or an aggregation of several DERs) that are calculated based on the network conditions in each time interval. These envelopes are then communicated to DERs over a forward time horizon, typically, 24 hours.

10.5.2 Project description

Considering the increasing amounts of various DERs in networks including PV systems, batteries, and EVs, the main idea behind the DOE is to manage the energy import/export at each connection point for a safe and secure network operation. This allows a level of flexibility since the final control and management of DER resources is left to the customers.

Fig. 10-4 shows the process for calculating DOEs.

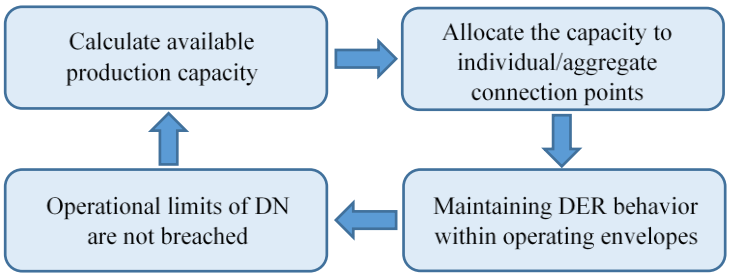

Fig. 10-4 Calculating operating envelopes in each time interval [129]

Benefits of DOEs: DOEs differ from existing proposals for active network management, for instance, defining power quality response modes for smart inverters which provide exact setpoints for DERs. Instead, DOEs take into account the voltage and thermal limits in all parts of the DN and provide a range of DER behaviours to ensure these operational limits are not violated.

DOEs provide bidirectional limits for both active and reactive power and therefore, they have the potential to be used for a variety of operational use cases. These use cases can include managing the solar generation, charging/ discharging of the batteries and EVs, DER market participation, and maintaining system security. For example, utilizing DOEs ensures that DER market participation does not jeopardize the safe and secure network operation.

The flexibility of DOE, also, makes them a suitable method for aggregation of assets in different parts of the network. In this way, one DOE can be assigned to an aggregation zone and the management of the assets in that zone based on the DOE can be done by the aggregator or retailers.

DOEs can be progressively implemented in different parts of the network, which makes their deployment, test, and validation easier.

Calculation of DOEs: Mathematically speaking, the envelopes can be defined in various ways with either voltage and/or thermal limits representing the binding constraints. Some samples are displayed in Fig. 10-5 and Fig. 10-6.

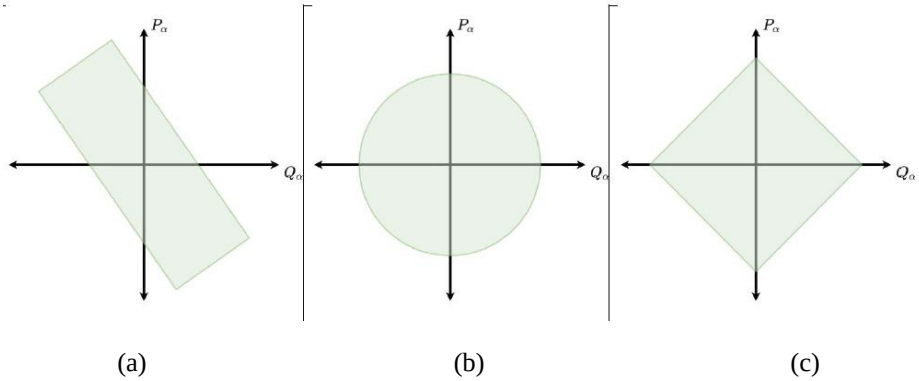

Fig. 10-5 Different DPEs when the voltage or thermal constraints are considered independently, (a): voltage limits represent constraints, (b) and (c): thermal limits represent constraints [129]

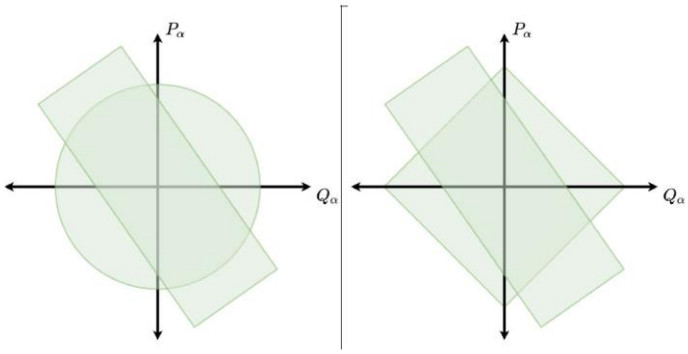

(a) (b)

Fig. 10-6 DPEs when the voltage or thermal constraints are considered jointly, (a) DPE is based on the circular form of the thermal constraint, (b) DPE is based on the affine form of the thermal constraint [129]

The calculation of DOEs requires several steps as described below:

- Determine the uncontrollable assets or connection points: Only those DERs or connection points that are able to respond to external DOE signals can be used for network management.
- Determine the location of DERs for DOE allocation: having the information about connection points is necessary for DOE calculation and allocation.
- Identify the network hosting capacity at each time frame: The available HC in each part of the system is determined based on the various network data. Since many DNSPs have limited visibility of their networks, state estimation methods might be necessary for HC estimation.
- Allocating the remaining HC to connection points: Allocation of the remaining HC to DERs can be defined in many ways. For instance, an equal allocation of active and reactive power, allocation based on the impact on the voltage rise/fall, and allocation based on the generation costs, etc.
- Mathematical algorithms for calculating DOE: after deciding on the allocation methods, several mathematical techniques can be used for determining envelopes for connection points including linearisation around the initial point of the system, optimisation methods, and analytical approaches.

Once the DOEs are calculated, they are published to each connection point in the form of an envelope over a rolling 24-hour timeframe.

10.5.3 Results

This project is still under implementation and validation and the findings will be available in the future.

10.5.4 Further observations from this project

The DOE approach delivers several benefits to DNSPs in terms of active network management and flexibility in DER control, however, it requires several key elements that may limit its actual applications. Firstly, this solution needs complete knowledge of the network topology, DER locations and electrical characteristics of DNs which is not easily accessible. Secondly, it necessitates complete network visibility which is a serious drawback considering the limited network visibility of most DNSPs. Thirdly, the calculation of DOEs involves accurate forecasting of demand and generation in different parts of the network. Finally, the application of this method requires communication with all connection points which accordingly increases the complexity, costs, and raises concerns about communication reliability as well as cybersecurity. Therefore, the practical implementations of DOEs in the short term seems improbable. However, it can be seen as a suitable approach in the mid-

and long-terms considering the gradual developments that are happening in the network visibility, coverage of AMI, and performance of data management tools of DNSPs.

10.6 SOLAR ENABLEMENT INITIATIVE [130] [131]

This project demonstrates the technical feasibility of a distribution system state estimation (SSE) from incomplete measurement data and develops a PV connection assessment tool that uses the results of DSSE to evaluate the PV export capabilities. The project analyses 20 MV feeders and produces estimates for their operational states.

The network and measurement data are the inputs to the SSE algorithm which are used along with the static data to estimate the network states. Smart meter data including half-hourly active and reactive power are used to produce aggregated customer measurements at distribution transformers. In addition, five-minute voltage recordings of those customers closest to distribution transformers were utilised by the algorithm. SSE generates estimates for power, voltage and current in the network. As shown in Fig. 10-7, the quality of estimation depends on the number and quality of measurements on a feeder.

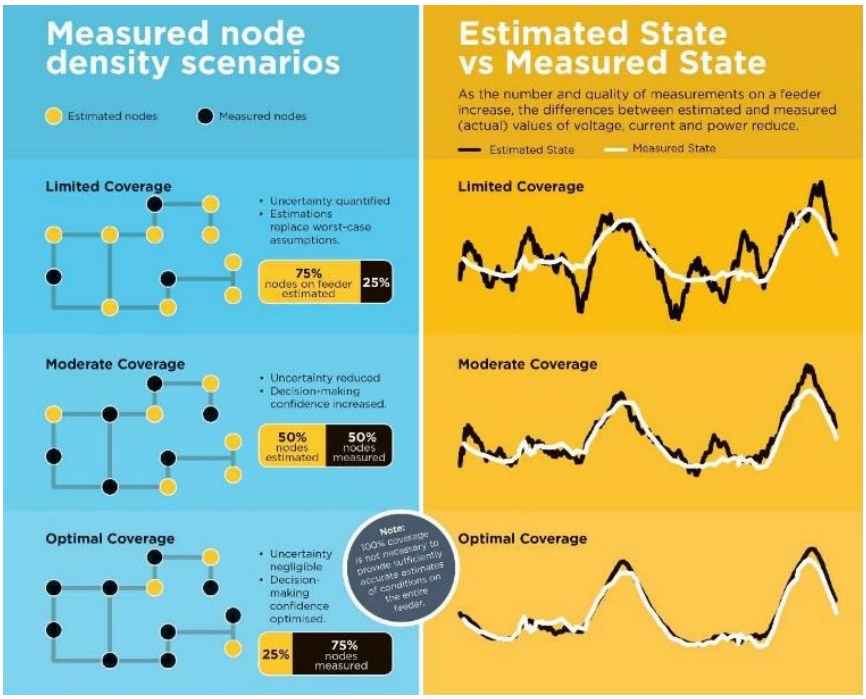

Fig. 10-7 System state estimation accuracy based on the coverage of measurements [132]

The results demonstrate that, even in cases with low measurement coverage, accurate estimates can be achieved if measurements are spread relatively uniformly through the network and the loads are relatively homogenous thus providing a representative sample of all loads.

The results of the SSE process were used by a semi-automated analysis tool to assess the PV HC of the network. As an initial step before the HC assessment, network states were reduced to a limited number of cases that represent the most critical network conditions. This is done through a clustering process that groups the nodes based on both the spatial correlation of voltage values among all nodes and the temporal correlation of loads. Therefore, in the first stage, nodes are grouped based on their voltage values (the difference between voltage magnitudes) and then, each group is further segregated based on the correlation among the loads (consumption behaviour at each node). The clustering allows decreasing the number of states from as high as 1000 cases to, for example, 20 critical cases.

The PV analysis tool estimates the maximum PV at each MV node. The tool can also be used for assessing any other form of generation since it is technology-agnostic. The criteria for PV HC are steady-state voltage magnitudes, voltage rise and loadings of feeders and transformers.

To calculate PV HC, a range for PV installation on a node needs to be defined in the tool. The tool solves the power flow starting from the maximum defined PV. The defined voltage and loading criteria are monitored and the iterations continue with smaller PV values until no violation is observed which represents the maximum PV HC of the feeder.

The complete process of the SEE algorithm, PV HC analysis tool and the user interaction platforms is shown in Fig. 10-8.

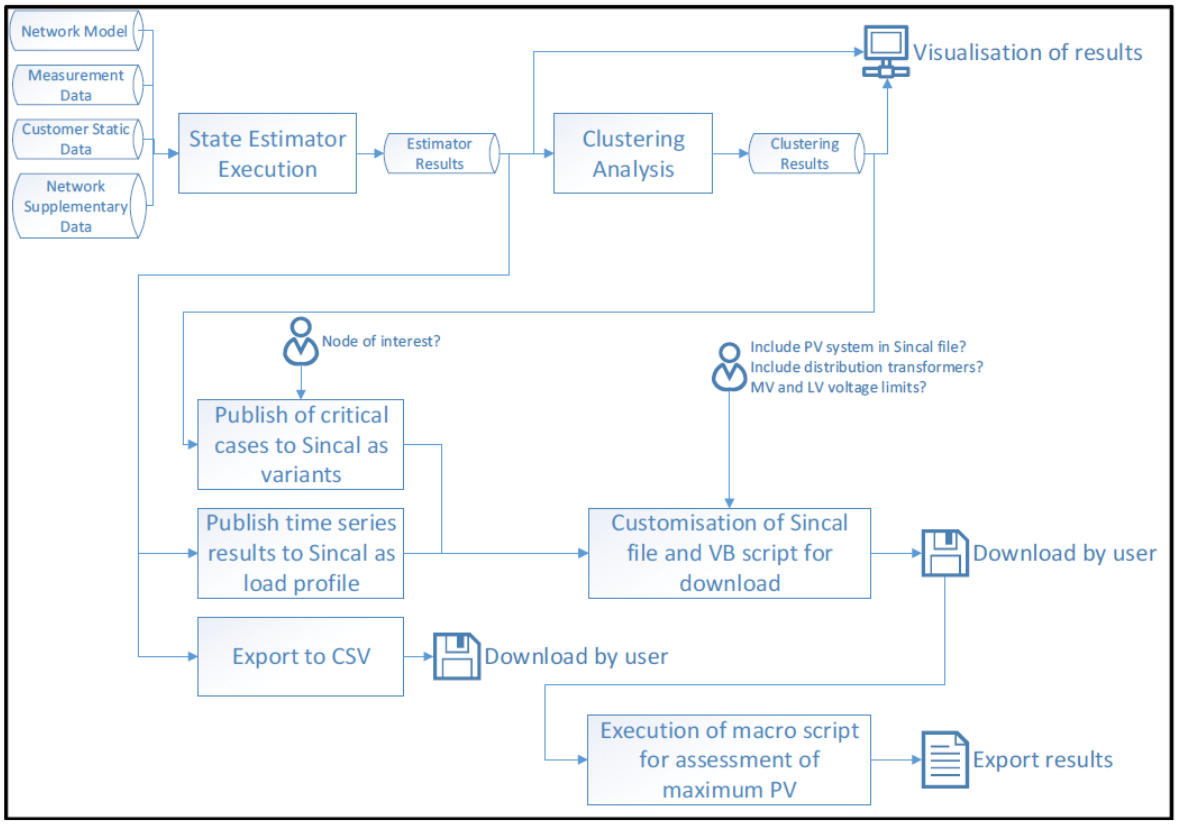

Fig. 10-8 Flowchart of the SSE, PV tool, and user interfaces [130]

10.7 OTHER PROJECTS

In a collaborative partnership between the South Australian Power Networks and Tesla Co. [83], a VPP consisting of 1000 customer rooftop PV systems and BESSs was established. The project demonstrated the capability to dynamically set network export limits for the VPP allowing them to raise over the normal static export limits and to release value to VPP DER aggregators. A network-VPP application programming interface (API) was designed that provides the condition of the network to the VPP controller which is consequently used to coordinate the cooperation of the PV-battery systems. The trial identified that using an API to exchange real-time and locational data on DN constraints between the DN management system and VPP has the potential to increase the export capacity limits up to twice of the present limits.

Recently, a project [119] has been initiated with the cooperation of major inverter manufacturers which aims at developing technical capabilities underpinning flexible exports for PV systems. The trial includes 600 customers that currently face zero/near-zero export limits due to network constraints. It tests two configurations to remove the potential need for permanent zero-export settings

for these customers. The first configuration is the built-in flexible export capability for inverters and the other is the use of an extra device that will be used as a gateway combined with the inverter. One of the expected outcomes of the project is to define the standard flexible export capabilities for inverters.

11 AER Guidelines on Determining Customer Export Curtailment Value

11.1 BACKGROUND

In March 2021, AEMC determination [133] for electricity and retail rules (to integrate DERs more efficiently into the grid) required the AER to develop a customer export curtailment value (CECV) methodology and publish CECVs annually. Accordingly, the AER commissioned the CSIRO and CutlerMerz to conduct a study into potential methodologies for valuing DER [134]. Furthermore, AER published its draft 'DER Integration Expenditure Guidance Note' [135] covering several main topics:

- *Presentation of business case*: this part discusses the DER integration strategy, input assumptions, and the options to be considered.
- *Value of DER (VaDER) methodology*: the value of an investment to increase HC.
- *Defining the base case scenario*: assessing existing levels of HC.
- *Quantifying DER benefits*: types of benefits and quantifying procedure.

Furthermore, the AER published an issues paper on the development of CECV methodology [136] which addresses the following topics:

- Interpretation of CECV*:* discusses interpreting export curtailment, CECV value interpretation and the relationship between CECVs and export tariffs.
- *Estimating CECV:* discusses the distribution of costs among customers, locational nature of costs (NEM regions), temporal nature of costs and modelling issues for estimating wholesale market benefits.

In the following, the procedure for preparing the hosting capacity studies according to AER guidelines is briefly explained.

11.2 PRESENTATION OF BUSINESS CASE

11.2.1 DER integration strategy

Based on AER guidelines, the proposed DER integration strategy adopted by DNSPs should align with a broader, longer-term DER integration strategy. Most importantly, it should cover:

- *DER penetration forecast*: DER forecast for at least 10 years and implications on the network.
- *Evidence of tariff reform*: to accommodate the DER forecast and reduce the need for network investment. This involves both the 'export pricing' and 'export tariffs'.
- *Clear breakdown of DER integration expenditure*: in terms of augmentation, ICT capital expenditure (capex) and operating expenses (opex).
- Related expenditures under the Demand Management Innovation Allowance.
- *Dynamic operating envelopes*: Details of the plan for the implementation of DOEs.
- Evidence of DER integration activities: Details of activities undertaken, actual expenditures, and the impacts on customers in the current regulatory period.

11.2.2 Format of the business case

The business case should involve a comparison of the benefits from the identified solutions against a base case scenario or business as usual (BAU). DNSPs may assume a static export limit in their BAU,

however, it must be shown that this limit is not selected arbitrarily (e.g. by performing sensitivity analysis).

11.2.3 Input assumptions

DNSPs are required to consider credible input assumptions for their proposed integration strategy. These include assumptions with respect to the market data, DER forecasts, and other relevant assumptions from credible sources such as AEMO. DER forecast indicates the DER adoption in terms of type, number and capacity.

11.2.4 Options analysis

DNSPs should demonstrate that all credible options are considered and justify that the selected option(s) has the lowest cost. An option is considered to be a credible option if it addresses the need, is commercially and technically feasible and can be implemented in sufficient time.

11.3 HOSTING CAPACITY ANALYSIS

The HC analysis/estimation directly affects the DER expenditure strategy; hence, the AER requires several factors to be included in the HC studies. Notably, DNSPs should demonstrate a comprehensive understanding of the HC. Those networks that have invested in network visibility and have access to the AMI data should use such data in their HC assessments.

11.4 VALUE OF DER METHODOLOGY

The methodology for determining the value of an increase in hosting capacity compares the total electricity system costs as a result of increasing hosting capacity with the total electricity system costs of not doing so as shown in Fig. 11-1 [135].

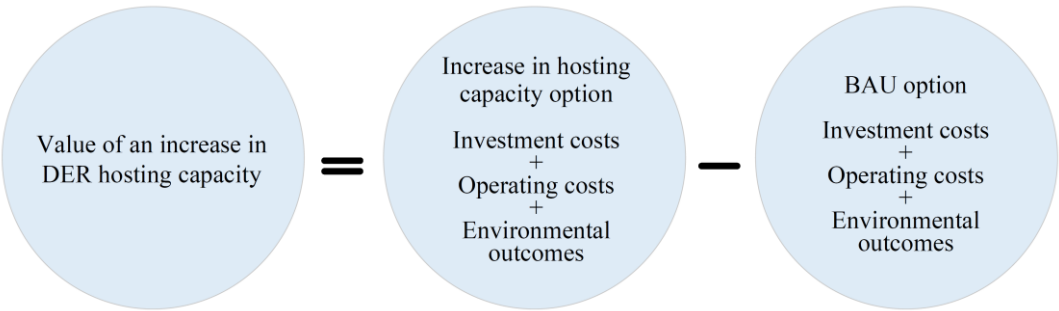

Fig. 11-1 Determining the value of an increase in HC

Under the VaDER methodology, DNSPs must identify which costs and benefits associated with an increase in hosting capacity can be included. In this regard, three main value streams (value stack) can be evaluated including:

- *Wholesale market benefits*: including i) avoided generator short-run marginal costs (SRMC), ii) avoided generator capacity investment and iii) essential system services such as reducing centralised ESS needs or providing frequency control ancillary services (FCAS).
- *Network benefits*: including i) avoided/deferred transmission/distribution augmentation, ii) avoided replacement/asset derating, iii) avoided transmission/distribution losses, iv) improving network reliability.
- *Environmental benefits*: avoided greenhouse gas emissions

Wholesale market benefits are the primary benefits (and in some cases the only benefits) quantified by DNSPs. For evaluating network benefits, DNSPs should either adopt network planning processes

described in RIT-T and RIT-D guidelines (where there are project-specific impacts) or estimate average long-run marginal costs (LRMC) where there are broad network impacts. Quantifying environmental benefits can be undertaken if renewable energy targets and/or a potential carbon price for generators are available for that jurisdiction.

It should be noted that based on the AER draft note, DNSPs must estimate the expected value of additional DER exports that will occur as a result of the proposed investment rather than valuing the impact of export curtailment (a scenario where DER exports are lower).

There are still various questions regarding the interpretation and application of CECVs as discussed in [136]. Mainly, the following questions are still under discussion and are open to suggestions by DNSPs:

- *Interpretation of export curtailment in the context of calculating CECVs*: AER suggests that for the purpose of calculating CECVs, DNSPs do not necessarily need to identify instances of curtailment and estimate the impacts on specific customers, but rather assume that curtailment is a scenario where a lower level of DER export occurs relative to an expected level. Defining these scenarios (setting the expected level) would be a key element of the CECV methodology.
- *Which DER value streams should be captured in the CECV?:* The study by CSIRO and CutlerMerz [134] suggests that the application of feed-in tariff rates or wholesale prices to DNSP investments should be treated with caution, as they may include generator ramping costs, start-up/shut-down costs, portfolio bidding strategy effects, effects of plant availability decisions and a multitude of other factors, not all of which represent economic benefits. Also, wholesale prices can be seen to diverge significantly from the estimated SRMC of generators at times.
- *Should CECVs be specific to DER customers or all customers?* CECVs can represent the detriment to all customers from the curtailment of exports (or lower levels of exports). DER customers are most impacted by export curtailment in the short term, but over the long term all customers are adversely impacted. All customers benefit from greater levels of DER exports, but to different degrees, and it is important that DER exporters only pay export tariffs that reflect the value to them.
- *How should CECVs be expressed?*: If the focus is on the calculation of wholesale market costs (such as additional dispatch costs due to curtailed solar PV generation), CECVs may be expressed as $ per MWh of curtailed solar PV generation.
- *Should there be a more explicit link between CECVs and export tariffs?*: CECVs and two-way pricing have a relationship, but it is indirect. The two-way price signals will help DER customers decide when to export and what other investments they can make to optimise their use of the network capacity.
- *Should CECVs be estimated by NEM region?:* The spot price for each region of NEM is determined at the regional reference node, which is a point where demand is usually highest in the region. It is sensible to estimate CECVs by NEM region, as this would be a simple approach and would reflect the nature of operations in the NEM.
- *What is the appropriate temporal aggregation for estimating CECVs?*: Electricity exports to the grid are generally greater when electricity demand is lower, such as in spring or autumn. CECVs should reflect the average value of the foregone solar PV generation based on the expected time profile of electricity exports, accounting for both the time of day and seasonality.
- *Do shorthand approaches provide sufficient forecasting ability or is electricity market modelling necessary for calculating CECVs? And how should generator bidding behaviour be modelled?*

The CSIRO and CutlerMerz [134] commented on the suitability of longhand methods (electricity market modelling) versus shorthand methods (such as simple spreadsheets) for estimating wholesale market benefits. AER suggests that there should be an appropriate balance between simple but potentially inaccurate methods and accurate but overly complex (and potentially expensive) methods.

12 Conclusions

12.1 SUMMARY OF PROJECT ACCOMPLISHMENTS

In this report, a range of the main topics related to voltage management and hosting capacity of distribution networks have been reviewed. Various technical resources including industrial outputs and research articles were reviewed and their findings were summarised and reported. Considering the wide diversity of topics and concerns in distribution networks, this report did not aim to cover all issues in detail. Therefore, it can be seen as a reference for future efforts for exploring relevant topics more comprehensively.

In the first stage, the challenges associated with increasing PV penetrations in distribution networks was discussed. This is especially critical for Australia as one of the leading countries in the world in terms of small-scale PV utilisation.

In the second part of the report, the main approaches for voltage management in DNs including traditional and emerging solutions were briefly illustrated and some of the main impacts of PV generation on the effectiveness of voltage control devices were explained. Furthermore, advanced control methods such as advanced grid management and data-driven methods were presented. In particular, the use of smart inverters, their response modes and their performance were described in detail.

Accommodating much higher PV levels, which is forecast to occur during the next decade(s) and overcoming network limitations in terms of voltage problems and overloads are critical issues for DNSPs. Hence, estimating and enhancing HC has an ever-increasing importance for Australian DNSPs. In this regard, the third part of the report discusses different aspects of PV HC in DNs including the main concepts, assessment criteria, mathematical approaches, enhancement strategies, and practical procedures.

The final part of the report summarises the specifications and findings of two international studies and six Australian trials which demonstrated various approaches for HC analysis and PV HC enhancement. Moreover, the main advantages and shortcomings of each trial were highlighted. The overview of the proposed solutions can provide insights for DNSPs to manage the increasing PV installations and improve PVHC in their networks. The discussions showed that the network characteristics and the level of DN monitoring capabilities are among the important parameters affecting the accommodation of DER units. Several Australian studies have emphasised the importance of network visibility and real-time monitoring for network management. Having a higher level of visibility over the network and communications with DER units allow managing the DER resources more flexibly in reacting to network problems. In other words, this can help in the active management of DERs. The trial by Horizon Power is such an example in which DERs are managed through an internet-based DER management system. Other important issues have been also highlighted in these studies including updating standards, using operating envelopes for DERs, and conducting studies to better understand the DER behaviour during the disturbances.

While the main focus of this report was limited to the operation of DNs, the impacts of DER resources on overall network performance should not be overlooked. Fig. 12-1 shows the various challenges that the electricity network faces with increasing DER penetrations in DNs. Increased variability, increased uncertainty, and reduced flexibility are among the issues. Therefore, from the system viewpoint, an overall strategy for regulating the operation of DER resources is necessary. Updating standards and activating different grid supporting functions are parts of such plans.

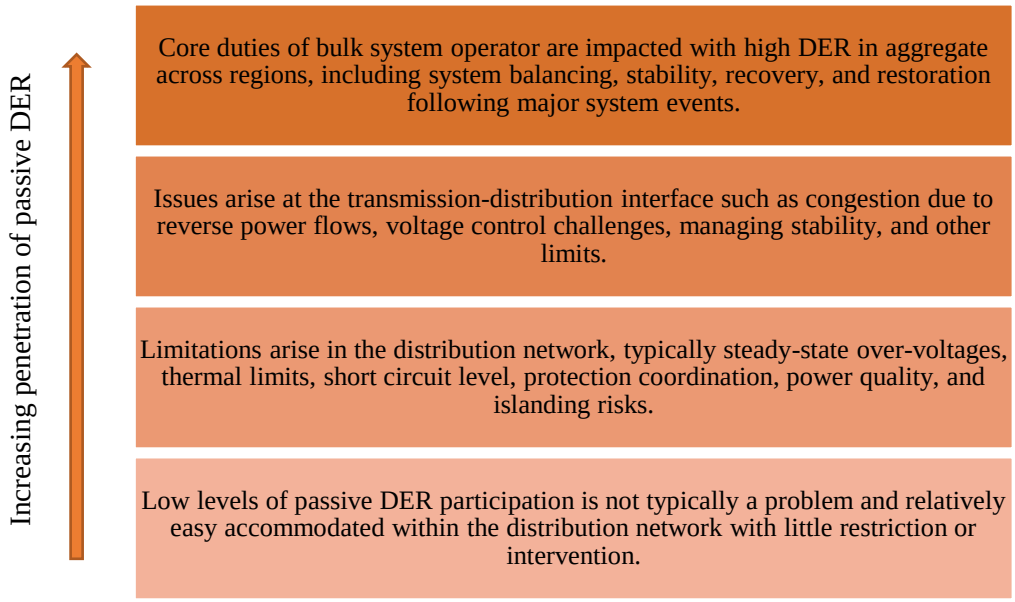

Fig. 12-1 System challenges with increasing penetrations of DERs [116]

Consequently, in the near future, regulatory platforms may require small-scale DER units to possess and activate specific functions to respond to grid disturbances such as frequency changes.

12.2 FUTURE DIRECTIONS FOR EXPANDING THIS STUDY

Considering the abundance of practices and research activities, this work briefly touched on some of the main areas related to voltage management and HC enhancement in DNs. The current literature review can be expanded in various ways based on expert industry knowledge and requirements. Some of the possible directions are highlighted in the following:

- Modelling and simulation: The current work detailed some of the main mathematical techniques for voltage regulation and HC studies. Considering the impact that modelling aspects have on the accuracy and results of the simulation studies, one direction is to delve into the modelling of sample LV networks. This can help to compare results of the available techniques, investigate sensitivities to model approximations and to develop new models and tools in software packages such as Python to assist the simulations in OpenDSS and/or other commercial software packages.
- Specific use cases: Various methods for voltage regulation were discussed in this report. One or a combination of some of these techniques might be of higher interest and can be studied in more depth.
- As explained in this report, the use of traditional and non-traditional solutions for HC enhancement as well as dynamic limits for DERs are relatively well studied in Australian HC projects. Conversely, HC improvement through the real time data-based distribution management system (DMS) is investigated in less detail in these studies. Considering the increasing visibility of DNs, such integrated approaches in network management and Volt/VAR control are more prevalent. The use of DMS can be studied from different perspectives including the engaged devices, identifying the minimum number of points that are critical for monitoring and voltage control, and cost/benefit analyses of different approaches. Several problems arising from the voltage control using smart inverters were highlighted in Section 7. These issues are still not well investigated in the literature and it is critical to explore their impacts on DNs.
- The use of novel technologies: innovative solutions such as conservative voltage reduction and their impacts on hosting more PV can be investigated in more detail.

- The impact of high PV generation on the bulk power system, the interaction of TNs and DNs, and the functionalities of small-scale DER units in responding to grid disturbances are important areas which require further studies.
- International practices: In this report, the results of major Australian trials and two international studies were summarized and reported. A wide variety of similar projects and trials exists globally which exercise and evaluate the traditional/ non-traditional solutions for voltage management and HC enhancement. One favourable direction is to further study such projects and their main characteristics and examine their suitability for the Australian electricity environment.

13 References

[1] "Renewables 2020 Global Status Report," REN21, 2020.

[2] E. N. Australia, "Electricity Network Transformation Roadmap," 2017.

[3] M. Farrelly and S. Tawfik, "Engaging in disruption: A review of emerging microgrids in Victoria, Australia," *Renewable and Sustainable Energy Reviews,* vol. 117, p. 109491, 2020.

[4] B. Kitchenham and S. Charters, "Guidelines for performing systematic literature reviews in software engineering," 2007.

[5] B. Kitchenham, O. P. Brereton, D. Budgen, M. Turner, J. Bailey, and S. Linkman, "Systematic literature reviews in software engineering–a systematic literature review," *Information and software technology,* vol. 51, no. 1, pp. 7-15, 2009.

[6] "IEA PVPS Annual Report Australia 2019," Austrlian PV Institute.

[7] "PV penetration map." Australian PV Institute. https://pv-map.apvi.org.au/historical (accessed November 2020).

[8] M. M. Haque and P. Wolfs, "A review of high PV penetrations in LV distribution networks: Present status, impacts and mitigation measures," *Renewable and Sustainable Energy Reviews,* vol. 62, pp. 1195-1208, 2016.

[9] H. Sun *et al.*, "Review of challenges and research opportunities for voltage control in smart grids," *IEEE Transactions on Power Systems,* vol. 34, no. 4, pp. 2790-2801, 2019.

[10] "Future Grid for Distributed Energy," CitiPower & Powercor and enea consulting, 2020.

[11] J. Petinrin and M. Shaabanb, "Impact of renewable generation on voltage control in distribution systems," *Renewable and Sustainable Energy Reviews,* vol. 65, pp. 770-783, 2016.

[12] A. Kharrazi, V. Sreeram, and Y. Mishra, "Assessment techniques of the impact of grid-tied rooftop photovoltaic generation on the power quality of low voltage distribution network-A review," *Renewable and Sustainable Energy Reviews,* vol. 120, p. 109643, 2020.

[13] R. Torquato, D. Salles, C. O. Pereira, P. C. M. Meira, and W. Freitas, "A comprehensive assessment of PV hosting capacity on low-voltage distribution systems," *IEEE Transactions on Power Delivery,* vol. 33, no. 2, pp. 1002-1012, 2018.

[14] M. Alam, K. Muttaqi, and D. Sutanto, "A comprehensive assessment tool for solar PV impacts on low voltage three phase distribution networks," in *2nd International Conference on the Developments in Renewable Energy Technology (ICDRET 2012)*, 2012: IEEE, pp. 1-5.

[15] F. Shahnia, R. Majumder, A. Ghosh, G. Ledwich, and F. Zare, "Sensitivity analysis of voltage imbalance in distribution networks with rooftop PVs," in *IEEE PES General Meeting*, 2010: IEEE, pp. 1-8.

[16] R. Seguin, J. Woyak, D. Costyk, J. Hambrick, and B. Mather, "High-penetration PV integration handbook for distribution engineers," National Renewable Energy Lab.(NREL), Golden, CO (United States), 2016.

[17] A. T. Procopiou and L. N. Ochoa, "Advanced Planning of PV-Rich Distribution Networks-Deliverable 2: Innovative Analytical Techniques," University of Melbourne and AusNet Services, 2019.

[18] A. T. Procopiou and L. N. Ochoa, "Advanced Planning of PV-Rich Distribution Networks – Deliverable 3: Traditional Solutions," University of Melbourne and AusNet Services, 2020.

[19] B. Palmintier *et al.*, "On the path to SunShot. Emerging issues and challenges in integrating solar with the distribution system," National Renewable Energy Lab.(NREL), Golden, CO (United States), 2016.

[20] S. M. Ismael, S. H. A. Aleem, A. Y. Abdelaziz, and A. F. Zobaa, "State-of-the-art of hosting capacity in modern power systems with distributed generation," *Renewable energy,* vol. 130, pp. 1002-1020, 2019.

[21] S. Stanfield and S. Stephanie, "Optimizing the Grid: Regulator's Guide to Hosting Capacity Analyses for Distributed Energy Resources," *IREC, US,* 2017.

[22] S. Breker, J. Rentmeister, B. Sick, and M. Braun, "Hosting capacity of low-voltage grids for distributed generation: Classification by means of machine learning techniques," *Applied Soft Computing,* vol. 70, pp. 195-207, 2018.

[23] R. McAllister, D. Manning, L. Bird, M. H. Coddington, and C. M. Volpi, "New Approaches to Distributed PV Interconnection: Implementation Considerations for Addressing Emerging Issues," National Renewable Energy Lab.(NREL), Golden, CO (United States), 2019.

[24] E. Mulenga, M. H. Bollen, and N. Etherden, "A review of hosting capacity quantification methods for photovoltaics in low-voltage distribution grids," *International Journal of Electrical Power & Energy Systems,* vol. 115, p. 105445, 2020.

[25] Y.-Y. Fu and H.-D. Chiang, "Toward optimal multiperiod network reconfiguration for increasing the hosting capacity of distribution networks," *IEEE Transactions on Power Delivery,* vol. 33, no. 5, pp. 2294-2304, 2018.

[26] J. Smith and M. Rylander, "Stochastic analysis to determine feeder hosting capacity for distributed solar PV," *Electric Power Research Inst., Palo Alto, CA, Tech. Rep,* vol. 1026640, pp. 0885-8950, 2012.

[27] F. Ding and B. Mather, "On distributed PV hosting capacity estimation, sensitivity study, and improvement," *IEEE Transactions on Sustainable Energy,* vol. 8, no. 3, pp. 1010-1020, 2016.

[28] "Rule 21 Interconnection." California Public Utilities Commission. https://www.cpuc.ca.gov/rule21/ (accessed November 2020).
[29] "Standard Interconnection Agreements and Procedures for Small Generators." Federal Energy Regulatory Commission. https://www.ferc.gov/industries-data/electric/electric-transmission/generator-interconnection/standard-interconnection (accessed November 2020).
[30] *NS194A, Inverter Energy Systems up to 200kVA Connected to the Ausgrid Low Voltage Distribution System*, 2014.
[31] M. S. S. Abad, J. Ma, D. Zhang, A. S. Ahmadyar, and H. Marzooghi, "Probabilistic assessment of hosting capacity in radial distribution systems," *IEEE Transactions on Sustainable Energy*, vol. 9, no. 4, pp. 1935-1947, 2018.
[32] "Impact factors, methods, and considerations for calculating and applying hosting capacity," EPRI, Palo Alto, CA; , 2018. 3002011009.
[33] M. Aien, M. Fotuhi-Firuzabad, and F. Aminifar, "Probabilistic load flow in correlated uncertain environment using unscented transformation," *IEEE Transactions on Power systems*, vol. 27, no. 4, pp. 2233-2241, 2012.
[34] J. E. R. Baptista, A. B. Rodrigues, and M. d. G. da Silva, "Probabilistic Analysis of PV Generation Impacts on Voltage Sags in LV Distribution Networks Considering Failure Rates Dependent on Feeder Loading," *IEEE Transactions on Sustainable Energy*, vol. 10, no. 3, pp. 1342-1350, 2018.
[35] A. Kharrazi, V. Sreeram, and Y. Mishra, "Assessment of voltage unbalance due to single phase rooftop photovoltaic panels in residential low voltage distribution network: A study on a real LV network in Western Australia," in *2017 Australasian Universities Power Engineering Conference (AUPEC)*, 2017: IEEE, pp. 1-6.
[36] E. N. Silva, A. B. Rodrigues, and M. d. G. da Silva, "Stochastic assessment of the impact of photovoltaic distributed generation on the power quality indices of distribution networks," *Electric Power Systems Research*, vol. 135, pp. 59-67, 2016.
[37] D. Villanueva, A. E. Feijóo, and J. L. Pazos, "An analytical method to solve the probabilistic load flow considering load demand correlation using the DC load flow," *Electric Power Systems Research*, vol. 110, pp. 1-8, 2014.
[38] M. Rylander *et al.*, "Alternatives to the 15% Rule," *Sandia National Laboratories SAND2015-10099*, 2015.
[39] *IEEE Std 1547.7, "Draft Guide to Conducting Distribution Impact Studies for Distributed Resource Interconnection"*, 2013.
[40] M. J. Reno, J. Deboever, and B. Mather, "Motivation and requirements for quasi-static time series (QSTS) for distribution system analysis," in *2017 IEEE Power & Energy Society General Meeting*, 2017: IEEE, pp. 1-5.
[41] R. Luthander, "Self-Consumption of Photovoltaic Electricity in Residential Buildings," Acta Universitatis Upsaliensis, 2018.
[42] M. J. Reno and K. Coogan, "Grid integrated distributed PV (GridPV)," *Sandia National Laboratories SAND2013-6733*, 2013. [Online]. Available: https://core.ac.uk/reader/193332550.
[43] T. E. de Oliveira, P. Carvalho, P. F. Ribeiro, and B. D. Bonatto, "PV hosting capacity dependence on harmonic voltage distortion in low-voltage grids: Model validation with experimental data," *Energies*, vol. 11, no. 2, p. 465, 2018.
[44] R. Carollo, S. K. Chaudhary, and J. R. Pillai, "Hosting capacity of solar photovoltaics in distribution grids under different pricing schemes," in *2015 IEEE PES Asia-Pacific Power and Energy Engineering Conference (APPEEC)*, 2015: IEEE, pp. 1-5.
[45] R. A. Shayani and M. A. G. de Oliveira, "Photovoltaic generation penetration limits in radial distribution systems," *IEEE Transactions on Power Systems*, vol. 26, no. 3, pp. 1625-1631, 2010.
[46] H. Al-Saadi, R. Zivanovic, and S. F. Al-Sarawi, "Probabilistic hosting capacity for active distribution networks," *IEEE Transactions on Industrial Informatics*, vol. 13, no. 5, pp. 2519-2532, 2017.
[47] M. Emmanuel and R. Rayudu, "The impact of single-phase grid-connected distributed photovoltaic systems on the distribution network using PQ and PV models," *International Journal of Electrical Power & Energy Systems*, vol. 91, pp. 20-33, 2017.
[48] J. Deboever, S. Grijalva, M. J. Reno, and R. J. Broderick, "Fast quasi-static time-series (QSTS) for yearlong PV impact studies using vector quantization," *Solar Energy*, vol. 159, pp. 538-547, 2018.
[49] M. U. Qureshi, S. Grijalva, M. J. Reno, J. Deboever, X. Zhang, and R. J. Broderick, "A Fast Scalable Quasi-Static Time Series Analysis Method for PV Impact Studies using Linear Sensitivity Model," *IEEE Transactions on Sustainable Energy*, vol. 10, no. 1, pp. 301-310, 2018.
[50] L. Rogers, "Hosting capacity methods, applications, opportunities and challenges," EPRI; , 2019.
[51] "Integration of hosting capacity analysis into distribution planning tools," EPRI, 2016; 3002005793.
[52] M. J. Reno and R. J. Broderick, "Technical evaluation of the 15% of peak load PV interconnection screen," in *2015 IEEE 42nd Photovoltaic Specialist Conference (PVSC)*, 2015: IEEE, pp. 1-6.
[53] "Network Opportunity Maps." https://www.energynetworks.com.au/projects/network-opportunity-maps/ (accessed.
[54] "Western Power network capacity mapping tool." https://www.westernpower.com.au/industry/calculators-tools/network-capacity-mapping-tool/ (accessed November 2020).

[55] "Eversource DG hosting capacity map." https://eversource.maps.arcgis.com/apps/webappviewer/index.html?id=eea778f65e5d4bac87a7ad83bde9f999 (accessed November 2020).
[56] "NYSEG & RGE's hosting capacity portal." https://www.arcgis.com/apps/webappviewer/index.html?id=84de299296d649808f5a149e16f2d87c (accessed November 2020).
[57] "ENMAX hosting capacity map." https://www.enmax.com/system-resources/hosting-capacity-map (accessed November 2020).
[58] C. K. Gan, C. Y. Lau, K. A. Baharin, and D. Pudjianto, "Impact of the photovoltaic system variability on transformer tap changer operations in distribution networks," *CIRED-Open Access Proceedings Journal*, vol. 2017, no. 1, pp. 1818-1821, 2017.
[59] J. Dong *et al.*, "Operational impacts of high penetration solar power on a real-world distribution feeder," in *2018 IEEE Power & Energy Society Innovative Smart Grid Technologies Conference (ISGT)*, 2018: IEEE, pp. 1-5.
[60] R. Yan, B. Marais, and T. K. Saha, "Impacts of residential photovoltaic power fluctuation on on-load tap changer operation and a solution using DSTATCOM," *Electric Power Systems Research*, vol. 111, pp. 185-193, 2014.
[61] T. S. Ustun, J. Hashimoto, and K. Otani, "Impact of smart inverters on feeder hosting capacity of distribution networks," *IEEE Access*, vol. 7, pp. 163526-163536, 2019.
[62] P. Chaudhary and M. Rizwan, "Voltage regulation mitigation techniques in distribution system with high PV penetration: A review," *Renewable and Sustainable Energy Reviews*, vol. 82, pp. 3279-3287, 2018.
[63] Y. Wang, K. Tan, X. Y. Peng, and P. L. So, "Coordinated control of distributed energy-storage systems for voltage regulation in distribution networks," *IEEE transactions on power delivery*, vol. 31, no. 3, pp. 1132-1141, 2015.
[64] M. Alam, K. Muttaqi, and D. Sutanto, "Distributed energy storage for mitigation of voltage-rise impact caused by rooftop solar PV," in *2012 IEEE Power and Energy Society General Meeting*, 2012: IEEE, pp. 1-8.
[65] F. Marra, Y. T. Fawzy, T. Bülo, and B. Blažic, "Energy storage options for voltage support in low-voltage grids with high penetration of photovoltaic," in *2012 3rd IEEE PES Innovative Smart Grid Technologies Europe (ISGT Europe)*, 2012: IEEE, pp. 1-7.
[66] L. Wang, D. H. Liang, A. F. Crossland, P. C. Taylor, D. Jones, and N. S. Wade, "Coordination of multiple energy storage units in a low-voltage distribution network," *IEEE Transactions on Smart Grid*, vol. 6, no. 6, pp. 2906-2918, 2015.
[67] F. Marra, G. Yang, C. Træholt, J. Østergaard, and E. Larsen, "A decentralized storage strategy for residential feeders with photovoltaics," *IEEE Transactions on Smart Grid*, vol. 5, no. 2, pp. 974-981, 2013.
[68] K. Joshi and R. R. Gokaraju, "An iterative approach to improve PV hosting capacity for a remote community," in *2018 IEEE Power & Energy Society General Meeting (PESGM)*, 2018: IEEE, pp. 1-5.
[69] S. Hashemi and J. Østergaard, "Efficient control of energy storage for increasing the PV hosting capacity of LV grids," *IEEE Transactions on Smart Grid*, vol. 9, no. 3, pp. 2295-2303, 2016.
[70] "Future grid for distributed energy- appendices," CitiPower & Powercor and enea consulting, 2020.
[71] B. J. Baliga, *The IGBT Device: Physics, Design and Applications of the Insulated Gate Bipolar Transistor*. Elsevier, 2015.
[72] O. P. Mahela and A. G. Shaik, "A review of distribution static compensator," *Renewable and Sustainable Energy Reviews*, vol. 50, pp. 531-546, 2015.
[73] M. S. Ali, M. M. Haque, and P. Wolfs, "A review of topological ordering based voltage rise mitigation methods for LV distribution networks with high levels of photovoltaic penetration," *Renewable and Sustainable Energy Reviews*, vol. 103, pp. 463-476, 2019.
[74] F. H. Gandoman *et al.*, "Review of FACTS technologies and applications for power quality in smart grids with renewable energy systems," *Renewable and sustainable energy reviews*, vol. 82, pp. 502-514, 2018.
[75] F. Jiang, L. Chen, C. Tu, Q. Guo, R. Zhu, and M. Liserre, "Operations and Coordination of Dual-Functional DVR and Recloser in a Power Distribution System," *IEEE Access*, vol. 7, pp. 140908-140921, 2019.
[76] S. Rezaeian-Marjani, S. Galvani, V. Talavat, and M. Farhadi-Kangarlu, "Optimal allocation of D-STATCOM in distribution networks including correlated renewable energy sources," *International Journal of Electrical Power & Energy Systems*, vol. 122, p. 106178, 2020.
[77] M. A. Sayed and T. Takeshita, "All nodes voltage regulation and line loss minimization in loop distribution systems using UPFC," *IEEE Transactions on Power Electronics*, vol. 26, no. 6, pp. 1694-1703, 2010.
[78] F. Capitanescu, L. F. Ochoa, H. Margossian, and N. D. Hatziargyriou, "Assessing the potential of network reconfiguration to improve distributed generation hosting capacity in active distribution systems," *IEEE Transactions on Power Systems*, vol. 30, no. 1, pp. 346-356, 2014.
[79] "Demand Response – Final Project Performance Report," United Energy, 2020.
[80] S. Sakar, M. E. Balci, S. H. A. Aleem, and A. F. Zobaa, "Hosting capacity assessment and improvement for photovoltaic-based distributed generation in distorted distribution networks," in *2016 IEEE 16th International conference on environment and electrical engineering (EEEIC)*, 2016: Ieee, pp. 1-6.
[81] K. A. Horowitz *et al.*, "An overview of distributed energy resource (DER) interconnection: current practices and emerging solutions," 2019.

[82] X. Liu, A. Aichhorn, L. Liu, and H. Li, "Coordinated control of distributed energy storage system with tap changer transformers for voltage rise mitigation under high photovoltaic penetration," *IEEE Transactions on Smart Grid,* vol. 3, no. 2, pp. 897-906, 2012.
[83] M. Zeraati, M. E. H. Golshan, and J. M. Guerrero, "A consensus-based cooperative control of PEV battery and PV active power curtailment for voltage regulation in distribution networks," *IEEE Transactions on Smart Grid,* vol. 10, no. 1, pp. 670-680, 2017.
[84] K. M. Muttaqi, A. D. Le, M. Negnevitsky, and G. Ledwich, "A coordinated voltage control approach for coordination of OLTC, voltage regulator, and DG to regulate voltage in a distribution feeder," *IEEE Transactions on Industry Applications,* vol. 51, no. 2, pp. 1239-1248, 2015.
[85] B. Palmintier *et al.*, "Feeder voltage regulation with high-penetration PV using advanced inverters and a distribution management system: a duke energy case study," National Renewable Energy Lab.(NREL), Golden, CO (United States), 2016.
[86] P. Kilby, "Distribution voltage management, high PV penetrations & the 230V transition," ed: Energy Queensland, 2019.
[87] S. Pukhrem, M. Basu, M. F. Conlon, and K. Sunderland, "Enhanced network voltage management techniques under the proliferation of rooftop solar PV installation in low-voltage distribution network," *IEEE Journal of Emerging and Selected Topics in Power Electronics,* vol. 5, no. 2, pp. 681-694, 2016.
[88] J. I. Giraldez Miner *et al.*, "Simulation of hawaiian electric companies feeder operations with advanced inverters and analysis of annual photovoltaic energy curtailment," National Renewable Energy Lab.(NREL), Golden, CO (United States), 2017.
[89] J. I. Giraldez Miner *et al.*, "Advanced Inverter Voltage Controls: Simulation and Field Pilot Findings," National Renewable Energy Lab.(NREL), Golden, CO (United States), 2018.
[90] J. Smith, "Modeling high-penetration PV for distribution interconnection studies," *Electric Power Research Institute, Tech. Rep,* 2017.
[91] L. Collins and J. Ward, "Real and reactive power control of distributed PV inverters for overvoltage prevention and increased renewable generation hosting capacity," *Renewable Energy,* vol. 81, pp. 464-471, 2015.
[92] M. Zeraati, M. E. H. Golshan, and J. M. Guerrero, "Distributed control of battery energy storage systems for voltage regulation in distribution networks with high PV penetration," *IEEE Transactions on Smart Grid,* vol. 9, no. 4, pp. 3582-3593, 2016.
[93] "The Role of Decentralised Control for Managing Network Constraints for DER on Regional, Rural, and Remote Networks " Dynamic Limits, 2020.
[94] "Power Quality Response Mode Settings," Energy Networks Australia, 2020. [Online]. Available: https://www.energynetworks.com.au/projects/national-grid-connection-guidelines/power-quality-response-mode-settings/
[95] "Connecting the dots: PG&E DERMs pilot aims to manage multiple aggregator platforms," Utility Dive, 2016.
[96] "Networks Renewed: Technical Analysis," Prepared by the Institute for Sustainable Futures, University of Technology Sydney, 2017.
[97] K. E. Antoniadou-Plytaria, I. N. Kouveliotis-Lysikatos, P. S. Georgilakis, and N. D. Hatziargyriou, "Distributed and decentralized voltage control of smart distribution networks: Models, methods, and future research," *IEEE Transactions on smart grid,* vol. 8, no. 6, pp. 2999-3008, 2017.
[98] L. Yu, D. Czarkowski, and F. De Leon, "Optimal distributed voltage regulation for secondary networks with DGs," *IEEE Transactions on Smart Grid,* vol. 3, no. 2, pp. 959-967, 2012.
[99] A. Maknouninejad and Z. Qu, "Realizing unified microgrid voltage profile and loss minimization: A cooperative distributed optimization and control approach," *IEEE Transactions on Smart Grid,* vol. 5, no. 4, pp. 1621-1630, 2014.
[100] A. Von Meier, E. Stewart, A. McEachern, M. Andersen, and L. Mehrmanesh, "Precision micro-synchrophasors for distribution systems: A summary of applications," *IEEE Transactions on Smart Grid,* vol. 8, no. 6, pp. 2926-2936, 2017.
[101] H. Xu, A. D. Domínguez-García, V. V. Veeravalli, and P. W. Sauer, "Data-driven voltage regulation in radial power distribution systems," *IEEE Transactions on Power Systems,* vol. 35, no. 3, pp. 2133-2143, 2019.
[102] S. Nowak, C. Chen, and L. Wang, "Measurement-based Optimal DER Dispatch with a Recursively Estimated Sensitivity Model," *IEEE Transactions on Power Systems,* 2020.
[103] J. Zhang, Z. Chen, C. He, Z. Jiang, and L. Guan, "Data-Driven-Based Optimization for Power System Var-Voltage Sequential Control," *IEEE Transactions on Industrial Informatics,* vol. 15, no. 4, pp. 2136-2145, 2018.
[104] R. Dobbe, O. Sondermeijer, D. Fridovich-Keil, D. Arnold, D. Callaway, and C. Tomlin, "Toward Distributed Energy Services: Decentralizing Optimal Power Flow With Machine Learning," *IEEE Transactions on Smart Grid,* vol. 11, no. 2, pp. 1296-1306, 2019.
[105] S. Karagiannopoulos, P. Aristidou, and G. Hug, "Data-driven local control design for active distribution grids using off-line optimal power flow and machine learning techniques," *IEEE Transactions on Smart Grid,* vol. 10, no. 6, pp. 6461-6471, 2019.
[106] A. Nagarajan, M. H. Coddington, D. Brown, S. Hassan, L. Franciosa, and E. Sison-Lebrilla, "Studies on the Effects of High Renewable Penetrations on Driving Point Impedance and Voltage Regulator Performance:

National Renewable Energy Laboratory/Sacramento Municipal Utility District Load Tap Changer Driving Point Impedance Project," National Renewable Energy Lab.(NREL), Golden, CO (United States), 2018.
[107] H. Barth, D. Hidalgo, A. Pohlemann, M. Braun, L. H. Hansen, and H. Knudsen, "Technical and economical assessment of reactive power provision from distributed generators: Case study area of East Denmark," in *2013 IEEE Grenoble Conference*, 2013: IEEE, pp. 1-6.
[108] C. G. Kaloudas, L. F. Ochoa, B. Marshall, S. Majithia, and I. Fletcher, "Assessing the future trends of reactive power demand of distribution networks," *IEEE Transactions on Power Systems*, vol. 32, no. 6, pp. 4278-4288, 2017.
[109] L. Chen, H. Y. Li, S. Cox, and K. Bailey, "Ancillary service for transmission systems by tap stagger operation in distribution networks," *IEEE Transactions on Power Delivery*, vol. 31, no. 4, pp. 1701-1709, 2015.
[110] H. Sun, Q. Guo, B. Zhang, Y. Guo, Z. Li, and J. Wang, "Master–slave-splitting based distributed global power flow method for integrated transmission and distribution analysis," *IEEE Transactions on Smart Grid*, vol. 6, no. 3, pp. 1484-1492, 2014.
[111] N. Pilatte, P. Aristidou, and G. Hug, "TDNetGen: An open-source, parametrizable, large-scale, transmission, and distribution test system," *IEEE Systems Journal*, vol. 13, no. 1, pp. 729-737, 2017.
[112] P. Aristidou, G. Valverde, and T. Van Cutsem, "Contribution of distribution network control to voltage stability: A case study," *IEEE Transactions on Smart Grid*, vol. 8, no. 1, pp. 106-116, 2015.
[113] J. Morin, F. Colas, S. Grenard, J.-Y. Dieulot, and X. Guillaud, "Coordinated predictive control in active distribution networks with HV/MV reactive power constraint," in *2016 IEEE PES Innovative Smart Grid Technologies Conference Europe (ISGT-Europe)*, 2016: IEEE, pp. 1-6.
[114] T. Ding, C. Li, C. Huang, Y. Yang, F. Li, and F. Blaabjerg, "A hierarchical modeling for reactive power optimization with joint transmission and distribution networks by curve fitting," *IEEE Systems Journal*, vol. 12, no. 3, pp. 2739-2748, 2017.
[115] T. Erseghe, "Distributed optimal power flow using ADMM," *IEEE transactions on power systems*, vol. 29, no. 5, pp. 2370-2380, 2014.
[116] "Maintaining power system security with high penetrations of wind and solar generation," Australian Energy Market Operator (AEMO), 2019.
[117] "Test Smart Inverter Enhanced Capabilities – Photovoltaics (PV), EPIC Program," Pacific Gas and Electric (PG&E) Company, 2019.
[118] "Test Smart Inverter Enhanced Capabilities – Photovoltaics (PV): Smart Inverter Modeling Report, EPIC Program. ," Pacific Gas and Electric (PG&E) Company, 2019.
[119] "Distributed Generation Monitoring and Voltage Tracking- EPIC Program," Pacific Gas and Electric (PG&E) Company, 2017.
[120] "AS/NZS 4777.2 – Inverter Requirements standard." AEMO. https://aemo.com.au/en/initiatives/major-programs/nem-distributed-energy-resources-der-program/standards-and-connections/as-nzs-4777-2-inverter-requirements-standard (accessed November 2020).
[121] "Network hosting capacity projects progress report (year one)," Australian Renewable Energy Agency, 2020.
[122] A. T. Procopiou and L. N. Ochoa, "Advanced Planning of PV-Rich Distribution Networks-Deliverable 1: HV-LV modelling of selected HV feeders," University of Melbourne and AusNet Services, 2019.
[123] A. T. Procopiou and L. N. Ochoa, "Advanced Planning of PV-Rich Distribution Networks – Deliverable 4: Non-Traditional Solutions," University of Melbourne and AusNet Services, 2020.
[124] W. Nacmanson and L. N. Ochoa, "Advanced Planning of PV-Rich Distribution Networks–Deliverable 5: Cost Comparison Among Potential Solutions," University of Melbourne and AusNet Services, 2020.
[125] "Jemena DER Hosting Capacity Project Interim Knowledge Sharing Report," Jemena, AusNet Services, and University of New South Wales, 2020.
[126] "Jemena DER Hosting Capacity Project Interim Knowledge Sharing Report - Appendices," Jemena, AusNet Services, and University of New South Wales, 2020.
[127] "Open Energy Networks Project," Prepared by EA Technology for Energy Networks Australia, 2019.
[128] "Open Energy Networks Interim Report--Required Capabilities and Recommended Actions," Australian Energy Market Operator (AEMO) and Energy Networks Australia, 2019.
[129] "On the calculation and use of dynamic operating envelopes," The Australian National University, 2020.
[130] "Solar Enablement Initiative- Project progress report," The University of Queensland, 2019.
[131] "Solar Enablement Initiative- final report," The University of Queensland, 2019.
[132] "Solar Enablement Initiative- Lessons Learnt," The University of Queensland, 2019.
[133] "Access, Pricing and Incentive Arrangements for Distributed Energy Resources- Rule Determination," Australian Energy Market Commission, 2021.
[134] "Value of Distributed Energy Resources: Methodology Study- Consultation Report," CSIRO and CutlerMerz, 2020.
[135] "DRAFT DER Integration Expenditure Guidance Note," Australian Energy Regulator (AER), 2021.
[136] "Issues paper-Customer Export Curtailment Value Methodology," Australian Energy Regulator (AER), 2021.

[137] T. Jamal, T. Urmee, M. Calais, G. Shafiullah, and C. Carter, "Technical challenges of PV deployment into remote Australian electricity networks: A review," *Renewable and Sustainable Energy Reviews,* vol. 77, pp. 1309-1325, 2017.

[138] "International Review of Residential PV Feed-in Management- A Review of Technologies, Practices, and Applications," Electric Power Research Institute (EPRI) (prepared for AEMO), 2018.

[139] "Activation of Distributed Energy Resources in the Energy Market: ," Electric Power Research Institute (EPRI) (Report for AEMO), 2019.

[140] A. Koirala, T. Van Acker, R. D'hulst, and D. Van Hertem, "Hosting capacity of photovoltaic systems in low voltage distribution systems: A benchmark of deterministic and stochastic approaches," *Renewable and Sustainable Energy Reviews,* vol. 155, p. 111899, 2022.

[141] K. A. Horowitz, A. Jain, F. Ding, B. Mather, and B. Palmintier, "A techno-economic comparison of traditional upgrades, volt-var controls, and coordinated distributed energy resource management systems for integration of distributed photovoltaic resources," *International Journal of Electrical Power & Energy Systems,* vol. 123, p. 106222, 2020.

[142] S. Papathanassiou *et al.*, "Capacity of Distribution Feeders for Hosting Distributed Energy Resources," *CIGRÉ Working Group C6.24,* 2014.

[143] "Test Capabilities of Customer-Sited Behind-the-Meter Smart Inverters- EPIC Program," Pacific Gas and Electric (PG&E) Company, 2018.

[144] D. W. Gao, E. Muljadi, T. Tian, and M. Miller, "Software comparison for renewable energy deployment in a distribution network," National Renewable Energy Lab.(NREL), Golden, CO (United States), 2017.

[145] Distribution Grid Integration Unit Cost Database, NREL, 2018. [Online] Available: https://www.nrel.gov/solar/distribution-grid-integration-unit-cost-database.html

14 Appendix

14.1 A LIST OF USEFUL REFERENCES

Topic	Ref.
PV impacts on the network	
Impact of PV on distribution systems and mitigation techniques	[16] [8] [12]
Technical challenges of PV deployment into remote networks	[137]
Worldwide strategies for residential PV feed-in management	[138]
Effects of small-scale DERs on bulk power system and their integration in energy markets	[139]
Impact of high PV penetration on voltage regulators	[106]
Voltage management	
Voltage management at distribution networks	[9] [97]
A review of distributed and decentralised control techniques for DNs	[97]
Coordinated voltage control between TNSPs and DNSPs	[9]
PV hosting capacity	
Review of PV hosting capacity	[20]
Selected international studies on HC assessment and their outcomes	[20]
PV hosting capacity quantification methods	[24] [140] [12]
Different HC quantification methods used by US Distribution Companies	[32]
Techno-economic analysis of several HC enhancement methods	[141]
CIGRÉ Working Group C6 report Reports the utility practices (rules, guidelines, limits) relevant to HC in different countries	[142]
Smart inverters	
Explanations on theoretical and practical approaches for the control of smart inverters	[96]
A summary of status and practices of hosting capacity analyses and smart inverter requirements in the state and regional levels at the USA	[23]
Smart inverters lab tests- complying with standards	[117] [143]
Problems associated with PQ response modes	[93]
FACTS devices	
Review of FACTS devices for smart grids	[74]
Software	
Software Comparison for simulating the DN with renewable DG	[144]
Different smart inverters functions and their implementation considerations in OpenDSS	[90]
AER Guidelines	
AER notes and guidelines on DER integration and CECV	[134] [135] [136]
Others	
NREL Database- Distribution system unit costs of different equipment	[145]
Network Opportunity Maps published by Energy Network Australia (ENA)	[53]