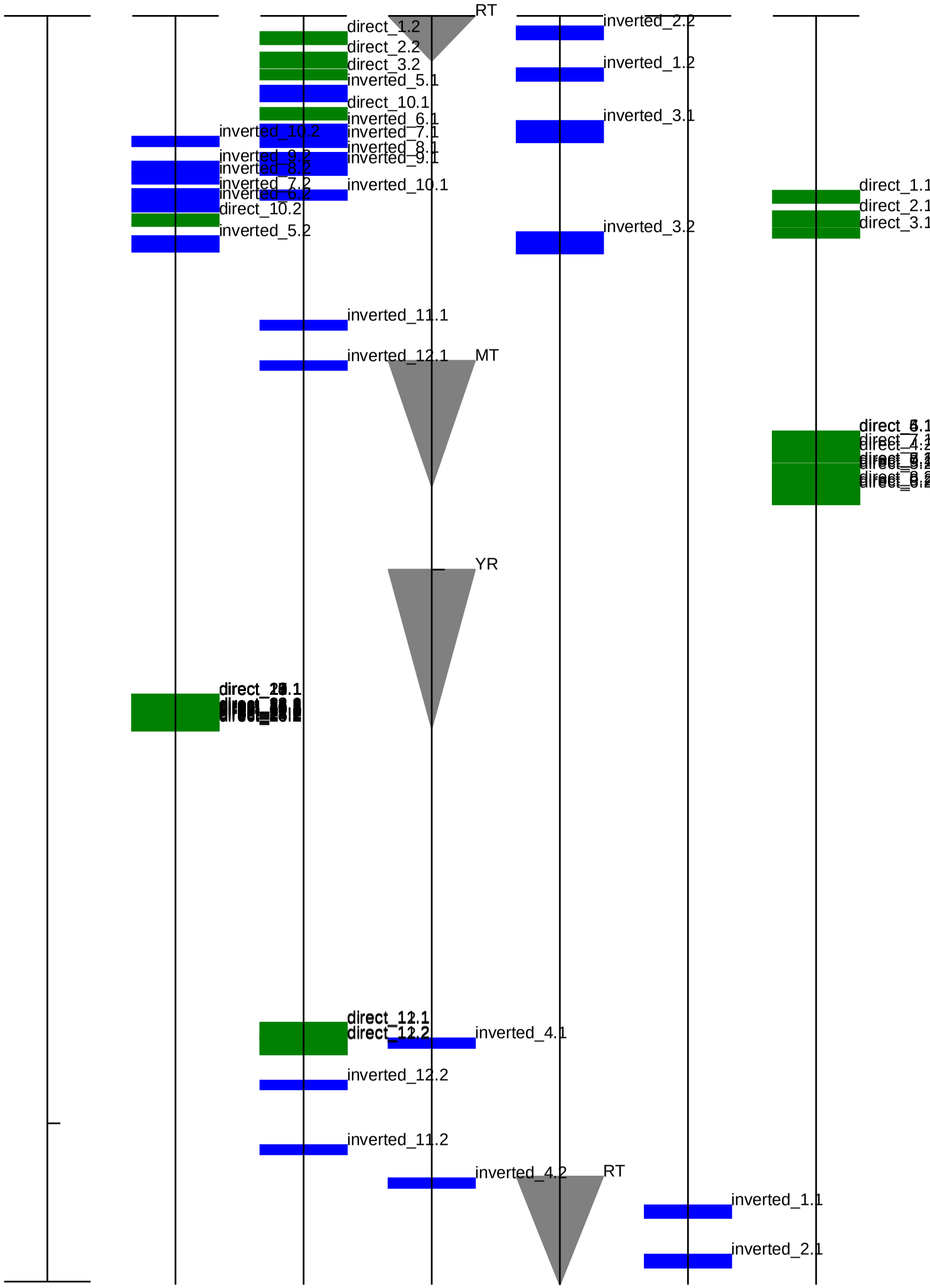
RT
direct_1.2
direct_2.2
direct_3.2
inverted_5.1
direct_10.1
inverted_6.1
inverted_7.1
inverted_8.1
inverted_9.1
inverted_10.1
inverted_2.2
inverted_1.2
inverted_3.1
inverted_3.2
inverted_10.2
inverted_9.2
inverted_8.2
inverted_7.2
inverted_6.2
direct_10.2
inverted_5.2
direct_1.1
direct_2.1
direct_3.1
inverted_11.1
inverted_12.1
MT
YR
direct_12.1
direct_12.2
inverted_4.1
inverted_12.2
inverted_11.2
inverted_4.2
RT
inverted_1.1
inverted_2.1