Secure Information by Quantum Encryption for Sensitive Data

Team E

Syed Aamir Abbas
Javeria Ashfaq
Huma Sabir
Muhammad Osama
Safoora Rana
Fatima Afzal

Hybrid Encryption Framework

- Design
- Implementation
- Evaluation
- QNN for classification

Design Phase

Hybrid Encryption Architecture

Quantum Key Distribution

Simulated BB84 protocol ensures keys are generated with quantum randomness (Z-basis vs. X-basis).

Symmetric Encryption

AES-256 provides speed and robustness for large file handling (Multimedia, Text, Archives).

Integrity & Authenticity

HMAC-SHA256 guards against key tampering;

System Pipeline

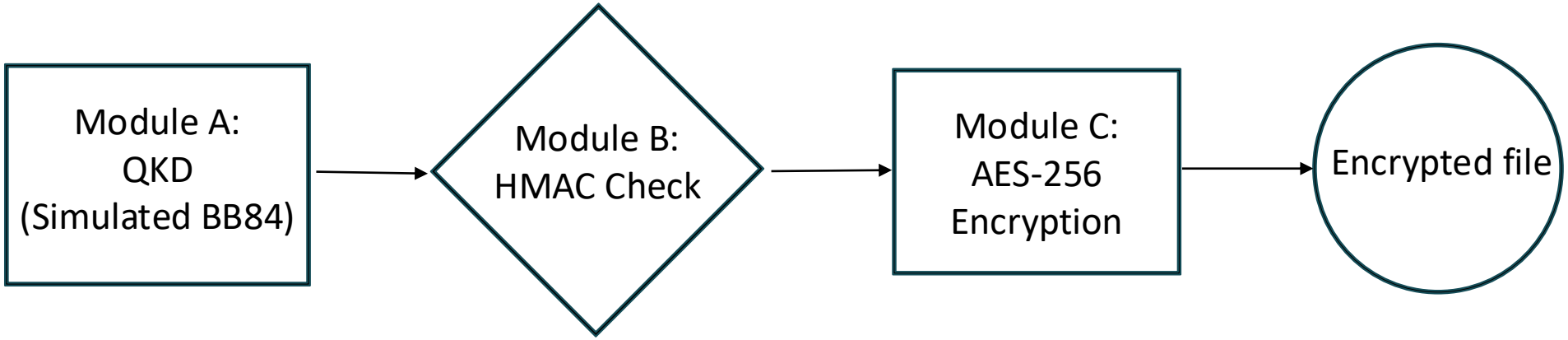

Module A: The Quantum Foundation (Simulated BB84)

Generating the Shared Secret

Alice's Bits & Basis	1	0	1	1	0	0	1	0
Basis	+	×	+	×	+	+	×	×
Bob's Basis	+	×	+	×	×	×	+	×
Sifting (Match Check)	✓ +	✓ ×	✓ +	✓ ×	✗ ×	✗ ×	✗ ×	✓ ×
Sifted Key (Result)	1	0	1	1				0

1. **Basis Selection:** Random choice between Z-basis ($|0\rangle$, $|1\rangle$) and X-basis ($|+\rangle$, $|-\rangle$).
2. **Measurement:** Bob measures qubits using his chosen basis.
3. **Reconciliation:** System retains only bits where bases match.

$$s = \{k_i \mid bA_i = bB_i\}$$

Module C: Locking the Vault (AES-256)

Bridging Quantum Keys to Classical Speed

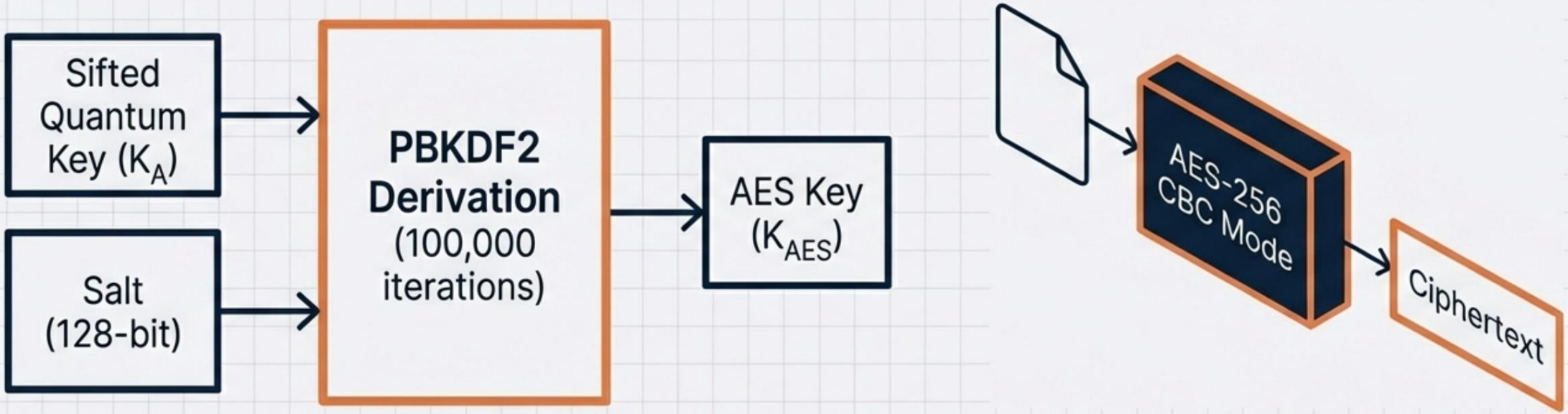

Why Hybrid? Quantum provides the unpredictable key; AES provides the computational speed necessary for large files (video, audio) that quantum streams cannot yet handle efficiently.

$$K_{AES} = \text{PBKDF2}(K_A, \text{Salt}, \text{Iterations})$$

Implementation

Qiskit

python™

Streamlit

Quantum Key Distribution (BB84 Protocol)

Alice Bits: [1, 1, 1, 1, 1, 0, 0, 1]

Alice Bases: [Z, Z, Z, Z, Z, X, X, Z]

Bob Bases: [X, Z, Z, X, Z, X, X, X]

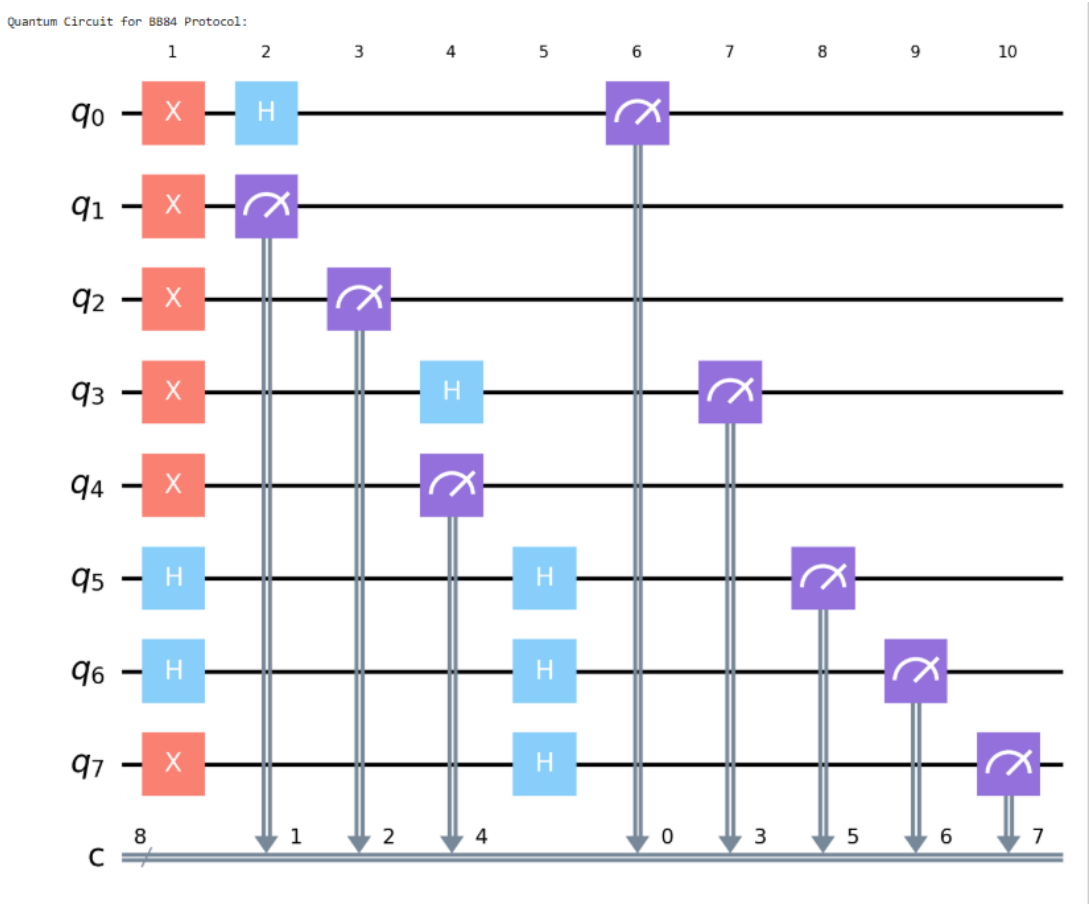

Bob Measurements: [0, 1, 1, 1, 1, 0, 0, 1]

Shared Key: [1, 1, 1, 0, 0]

Evaluation

Matrices	**Key Entropy**	measure randomness
	File Size Ratio	encrypted filesize/original filesize
	Bit Match Ratio	degree of base agreement between Alice and Bob
Adversarial Attacks	Key Tampering	
	HMAC Failure	
	File Corruption	

Real-World Applications & Use Cases

Medical IoT (Telemedicine)

Securing patient imaging (MRI/CT) where data privacy must last for decades against future decryption.

Educational Testbeds

A low-cost platform for universities to teach quantum concepts without scarce quantum hardware.

Secure Government Comms

Preparing infrastructure for the transition to NIST Quantum Cryptography standards.

DEMO

END GOALS

GUI Demo for Quantum encrypted data transmission.

Implement VQC for health classification.

Variational Quantum Classifiers (VQCs)

Feature Map

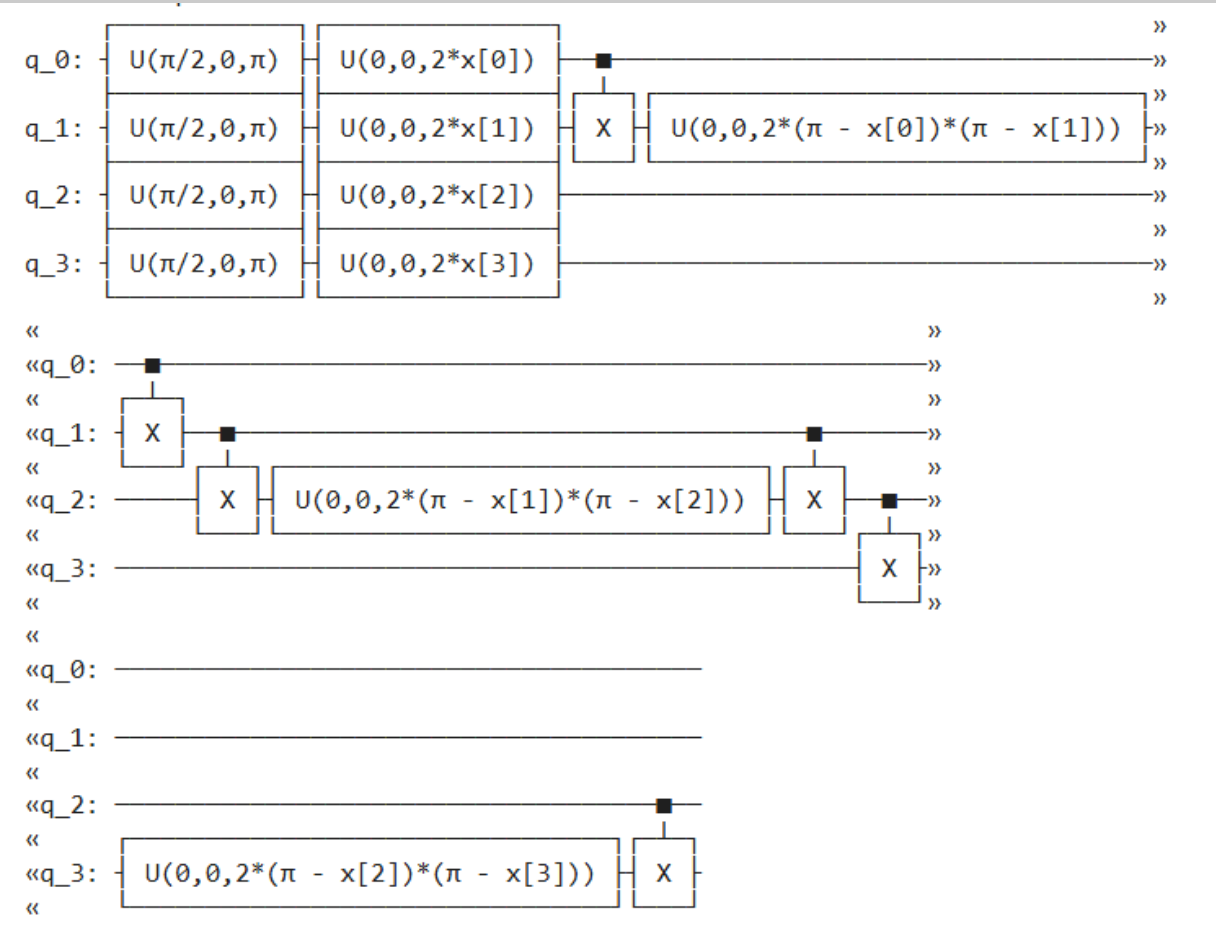

Circuit Ansatz

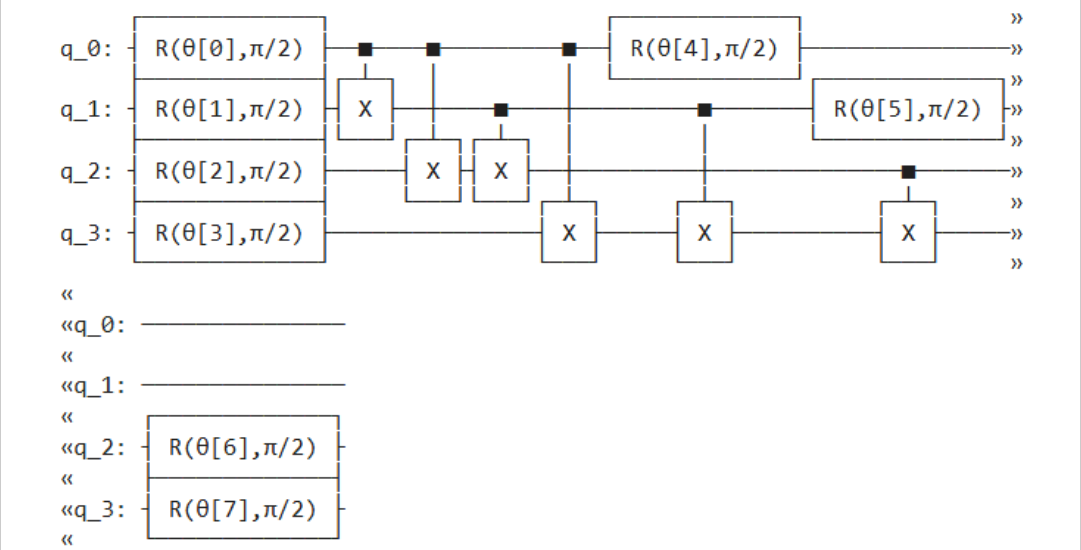

Performance Metrics

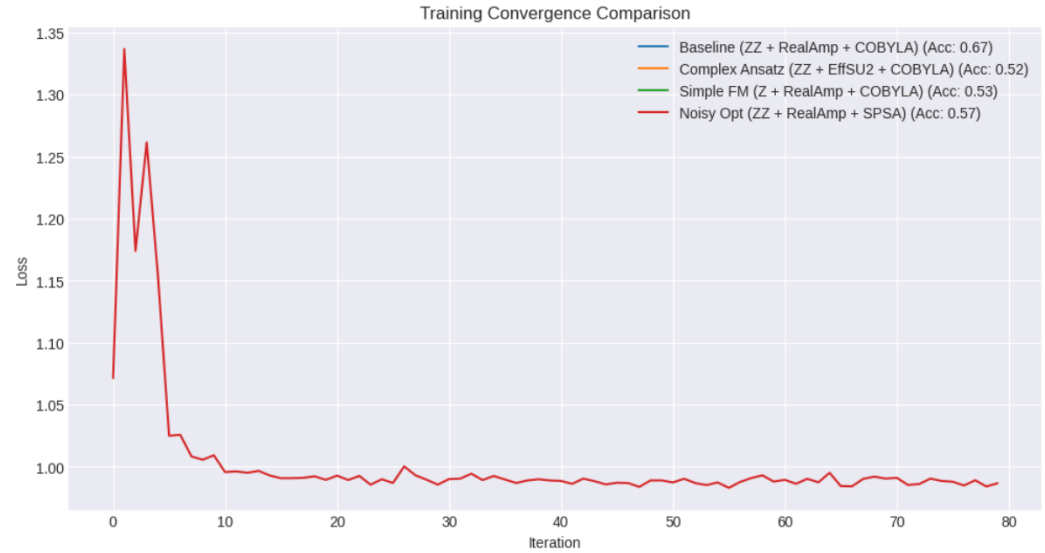

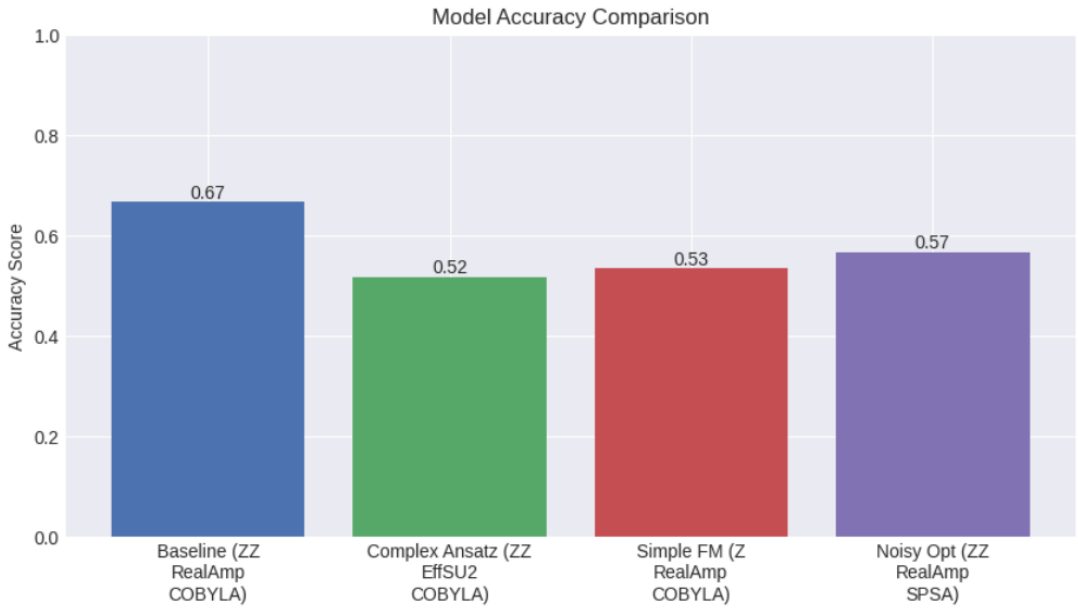

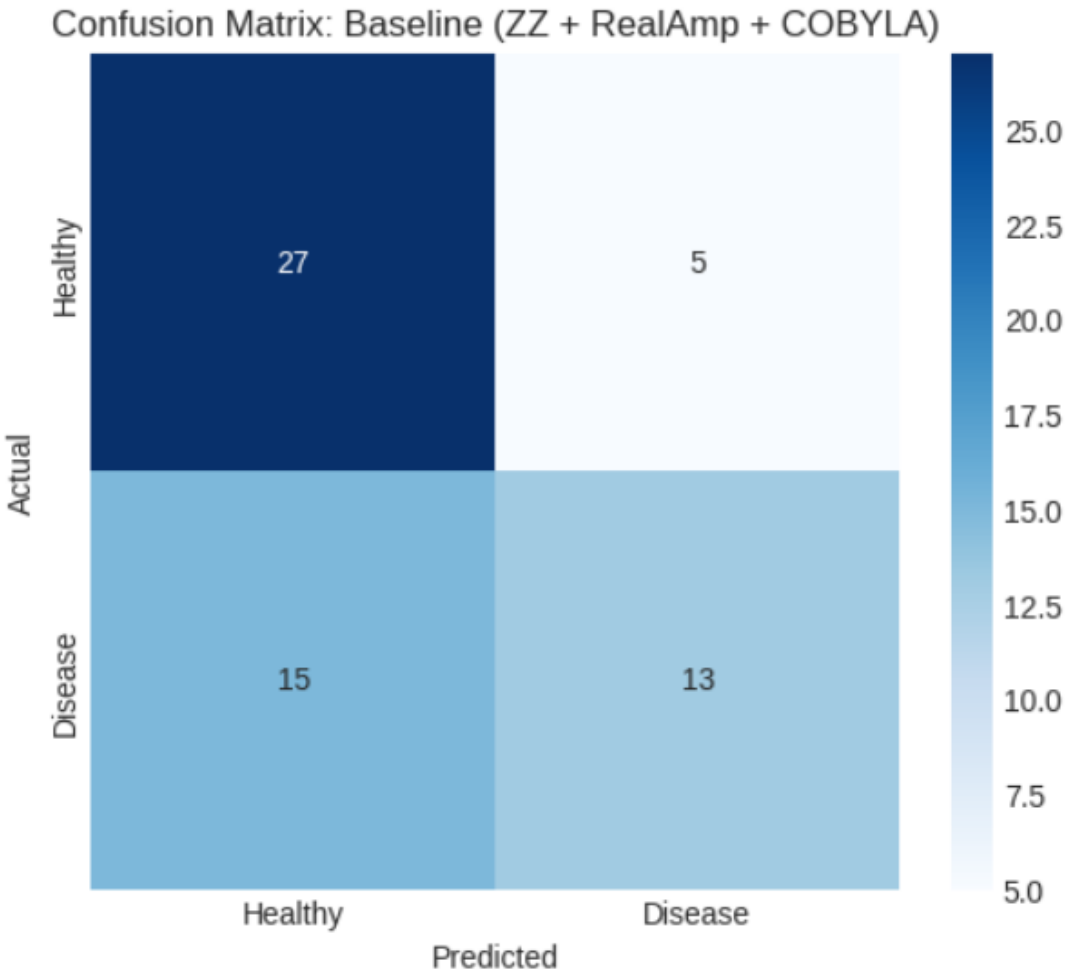

Sustainable Development Goals

Thank you