VISION™ PROFILE
EXTRUSIONS

Sample Approval Form

Customer: Robinson Windows
Attention: William Burns
CSR: Chih Chou

Die #: 16040
Description: S/H SLOPED SILL FRAME – (200 SERIES)
Rigid Colour: WH-136
Flex Colour: N/A
Capstock Colour: N/A

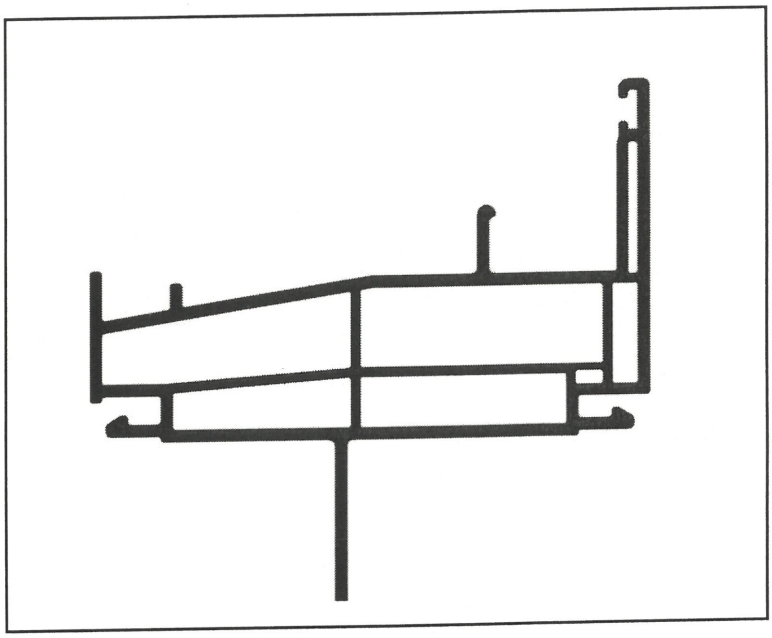

- ☒ Approved
- ☐ Approved with Comments
- ☐ Reject (Please Comment)
- ☐ Re-sample (Please Comment)

Comments: _____

Customer Signature:

Customer Name: Robinson Windows
Position: VP
Signature: [signature]
Date: 3-22-25

Vision Profile:

QC Manager: Tri Thai
Plant Manager: Pino Consolmagno

Notes:
(1) Please sign this form and return to your Customer Service Representative. Keep a copy for your records.
(2) Please sign a one foot sample. Return one (1) to your Customer Service Rep. and retain one (1) for your records.
(3) "Approved" indicated that the samples meet all the specifications required for your proper manufacturing and fabrication purposes. An "Approved" Status indicates Customer consent for Vision Profile to anodize and harden the tooling for production.
(4) "Approved with Comments" indicates that the sample does not meet all the specifications required for your proper manufacturing purposes, however, the issues can be addressed before production begins, without the need for re-sampling. Please consult with Vision Profile for any technical support you may need to address these issues.
(5) If samples are rejected, please explain in the comments section.
(6) If re-sampling is required, please explain in the comments section.