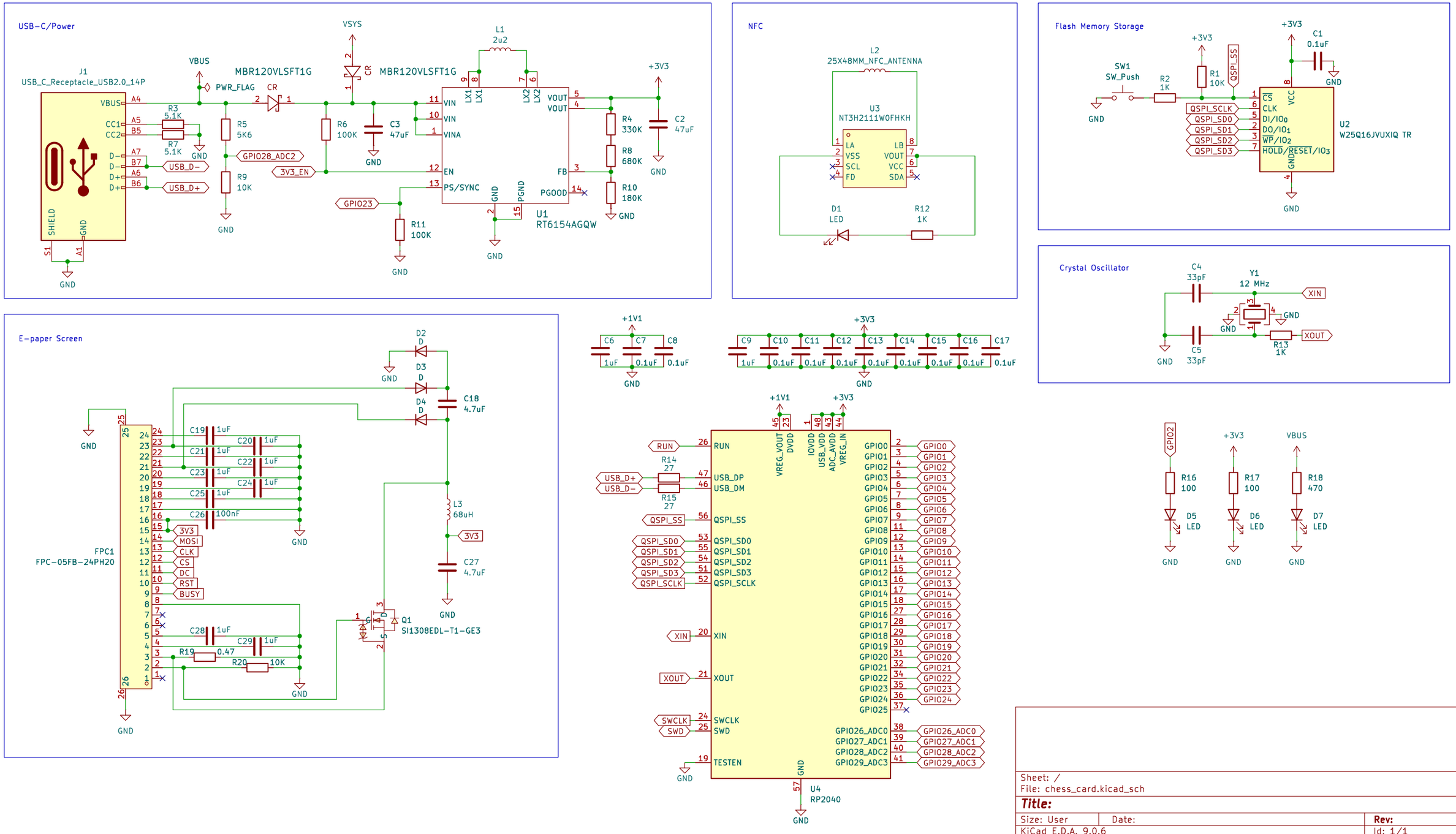

Sheet: /
File: chess_card.kicad_sch

Title:

Size: User	Date:	Rev:
KiCad E.D.A. 9.0.6		Id: 1/1