5 Bulk Acoustic Waves in Solids

Elasticity theory provides a complete description of the static properties of a mechanical system, and in fact parameters such as the elastic moduli can also be used to describe the dynamic properties over the full ultrasonic frequency range. However, we need a dynamic theory to describe wave propagation and that is provided in this chapter. We first generalize the 1D results for fluids to the case of 1D longitudinal waves in solids. We then examine the 3D solid, where both longitudinal and transverse modes are present. Finally, we discuss the attenuation mechanisms in a number of important cases.

The basic results for 1D propagation in fluids can be generalized to the 1D propagation of a simple longitudinal mode in solids. There are of course many differences between liquids and solids regarding their acoustic properties. For our purposes, some important ones are the following:

1. Compared to solids, liquids are very compressible. This is why the acoustic pressure and the compressibility are commonly used as parameters for liquids. Except for specialized applications, one never uses these parameters in solids; the stress and the elastic constants are the appropriate parameters in this case.
2. Liquids can change shape, as it were, at will, or at least to accommodate the container. Hence, a liquid cannot support a static shear stress; shear waves can only propagate in liquids at high frequencies and then only for a very short distance. However, in solids, it is essential to take into account longitudinal and transverse waves to give a full description. Thus, the scalar theory is insufficient to describe the 3D behavior of solids.
3. In liquids, the pressure is a scalar and acts uniformly on a volume element, so that the modulus of compression (bulk modulus) is the appropriate modulus for longitudinal wave propagation. In solids, however, one can have a unidirectional compression or tension so that the appropriate modulus for longitudinal waves is not the bulk modulus.

In this chapter, we summarize the 1D results and write them in the notation for longitudinal and transverse waves in solids. This is followed by the 3D theory for isotropic solids. Finally, we describe the propagation properties of ultrasonic waves and attenuation mechanisms in a number of important cases.

5.1 1D MODEL OF SOLIDS

We generalize the results of Chapter 3 for fluids as appropriate for longitudinal modes in solids for propagation in the x direction with wave velocity V_L. We consider an element of length l undergoing an elongation ∂u due to an external force F in the positive x direction.

The external stress is $T \equiv F/A$, so that the net stress on the element is $\partial T = l(\partial T/\partial x)$. This leads to a net force per unit volume on the element of $(\partial T/\partial x)$.

The strain is

$$S = \frac{\partial u}{l} = \frac{\partial u}{\partial x} \tag{5.1}$$

Hooke's law is given by $T \equiv cS$, where c is a constant.

Copyright © 2012. Taylor & Francis Group. All rights reserved.

Cheeke, J. David N.. Fundamentals and Applications of Ultrasonic Waves, Taylor & Francis Group, 2012. ProQuest Ebook Central, http://ebookcentral.proquest.com/lib/ub-wuerzburg/detail.action?docID=945471.
Created from ub-wuerzburg on 2021-12-11 15:16:12.

Writing Newton's law

$$\frac{\partial T}{\partial x} = \rho \ddot{u} \tag{5.2}$$

and combining this with Hooke's law, we immediately obtain the wave equation

$$\frac{\partial^2 u}{\partial x^2} = \frac{\rho_0}{c}\frac{\partial^2 u}{\partial t^2} \tag{5.3}$$

which can also be written for the stress and the velocity, similar to the case for fluids.

The solutions for the displacement are

$$u = A \exp j(\omega t - \beta x) + B \exp j(\omega t + \beta x)$$

As for fluids, the first term corresponds to propagation in the forward direction (+x) and the second to the propagation in the backward direction (–x).

The propagation parameters are

- wave number $\beta = \omega / V_L$
- wave velocity $V_L = \sqrt{c/\rho_0}$

The instantaneous values of the energy density follow from the expressions for the fluid and elasticity theory of Chapter 4.

$$u_K = \frac{1}{2}\rho_0 v^2 \tag{5.4}$$

$$u_P = \frac{1}{2}TS \tag{5.5}$$

and hence the average values are

$$\bar{u}_K = \frac{1}{2}\mathrm{Re}\ \frac{1}{2}\rho v v^* = \frac{1}{4}\mathrm{Re}[\rho v v^*] \tag{5.6}$$

$$\bar{u}_P = \frac{1}{2}\mathrm{Re}\ \frac{1}{2}TS^* \tag{5.7}$$

and finally

$$\bar{u}_a = \frac{1}{2}\mathrm{Re}[TS^*] \tag{5.8}$$

The acoustic intensity I can be written as

$$I = \bar{u}_a V_L \tag{5.9}$$

and the instantaneous acoustic Poynting vector

$$\mathcal{P} = -vT \tag{5.10}$$

which follows directly as a generalization of Equation 3.52.

Copyright © 2012. Taylor & Francis Group. All rights reserved.

Cheeke, J. David N.. Fundamentals and Applications of Ultrasonic Waves, Taylor & Francis Group, 2012. ProQuest Ebook Central, http://ebookcentral.proquest.com/lib/ub-wuerzburg/detail.action?docID=945471.
Created from ub-wuerzburg on 2021-12-11 15:16:12.

5.2 WAVE EQUATION IN THREE DIMENSIONS

Following the case for optics, on physical grounds we expect to find three acoustic polarizations in three dimensions; indeed, it is well known that for $3N$ atoms there are $3N$ normal modes, three branches with N modes per branch. On physical grounds, one expects to find one longitudinal branch and two transverse branches with orthogonal polarization. This section shows how the existence of the longitudinal and transverse branches flows directly from the formalism developed thus far.

The wave equation in three dimensions can be obtained immediately by combining the following two equations already seen:

$$\frac{\partial T_{ij}}{\partial x_j} = \rho_0 \frac{\partial^2 u_i}{\partial t^2} \tag{5.11}$$

$$T_{ij} = c_{ijkl} S_{kl} \tag{5.12}$$

With the various possibilities of full and reduced notation and the Lamé constants, that is, c_{ijkl}, c_{ij}, λ, and μ, there are many possible choices for proceeding. Anticipating the result, we choose c_{11} and c_{44}; also in this case the decoupling between longitudinal and transverse modes is most transparent. Thus,

$$T_{ij} = (c_{11} - 2c_{44}) S\delta_{ij} + 2c_{44} S_{ij} = (c_{11} - 2c_{44}) S\delta_{ij} + c_{44} \frac{\partial u_i}{\partial x_j} + \frac{\partial u_j}{\partial x_i} \tag{5.13}$$

where

$$S = \text{dilatation} = S_{ii} = \text{div}\,\vec{u} = \frac{\partial u_i}{\partial x_i} \tag{5.14}$$

Thus, the equation of motion becomes

$$\rho \frac{\partial^2 u_i}{\partial t^2} = \frac{\partial}{\partial x_i} (c_{11} - 2c_{44}) \frac{\partial u_i}{\partial x_i} + c_{44} \frac{\partial^2 u_i}{\partial x_j^2} + c_{44} \frac{\partial}{\partial x_i} \frac{\partial u_i}{\partial x_j} \tag{5.15}$$

This can be written in vectorial form

$$\rho \frac{\partial^2 \vec{u}}{\partial t^2} = (c_{11} - c_{44}) \vec{\ } (\vec{\ } \bullet \vec{u}) + c_{44} \vec{u} \tag{5.16}$$

where

$$\vec{\ } = \frac{\partial}{\partial x_1}, \frac{\partial}{\partial x_2}, \frac{\partial}{\partial x_3} \tag{5.17}$$

and

$$= \frac{\partial^2}{\partial x_k^2} \text{ is the Laplacian} \tag{5.18}$$

Copyright © 2012. Taylor & Francis Group. All rights reserved.

Cheeke, J. David N.. Fundamentals and Applications of Ultrasonic Waves, Taylor & Francis Group, 2012. ProQuest Ebook Central, http://ebookcentral.proquest.com/lib/ub-wuerzburg/detail.action?docID=945471.
Created from ub-wuerzburg on 2021-12-11 15:16:12.

Finally,

$$\rho \frac{\partial^2 \vec{u}}{\partial t^2} = (c_{11} - c_{44})\vec{\ }(\vec{\ } \bullet \vec{u}) + c_{44}\ \ ^2\vec{u} \tag{5.19}$$

For very good reasons it is traditional at this point to write that any vector can be written as the gradient of a scalar and the curl of a vector, the two new quantities being known as the scalar (ϕ) and vector ($\vec{\psi}$) potentials.

Thus,

$$\vec{u} = \vec{\ }\phi + \vec{\ } \times \vec{\ } \times \vec{\psi} \tag{5.20}$$

where

$$\vec{\ } \times (\vec{\ }\phi) \equiv 0 \tag{5.21}$$

$$\vec{\ } \bullet (\vec{\ } \times \vec{\psi}) \equiv 0 \tag{5.22}$$

Substituting in the equation of motion,

$$\rho \frac{\partial^2 \phi}{\partial t^2} + \rho \frac{\partial^2 (\vec{\ } \times \vec{\psi})}{\partial t^2} = (c_{11} - c_{44})\vec{\ }(\ \ ^2\phi) + c_{44}\ \ ^2(\vec{\ }\phi) + c_{44}\ \ ^2(\vec{\ } \times \vec{\psi}) \tag{5.23}$$

Using the Helmholtz identity in vector analysis, this becomes

$$\vec{\ }\ \ \rho \frac{\partial^2 \phi}{\partial t^2} - c_{11}\ \ ^2\phi\ \ + \vec{\ } \times\ \ \rho \frac{\partial^2 \vec{\psi}}{\partial t^2} - c_{44}\ \ ^2\vec{\psi}\ \ = 0 \tag{5.24}$$

Since the first term is purely a scalar and the second purely a vector, the two terms must be separately equal to zero:

$$\rho \frac{\partial^2 \phi}{\partial t^2} = c_{11}\ \ ^2\phi \tag{5.25}$$

$$\rho \frac{\partial^2 \vec{\psi}}{\partial t^2} = c_{44}\ \ ^2\vec{\psi} \tag{5.26}$$

Since $c_{11} = \lambda + 2\mu$ and $c_{44} = \mu$, we immediately associate the first equation with longitudinal waves and the second with transverse waves. It is thus natural that the scalar potential ϕ is associated with the propagation of the purely scalar property, the dilatation, and the vector potential with transverse waves that must have two (orthogonal) states of polarization. Most important, the use of scalar and vector potentials has allowed us to separate the equations of propagation of these two independent modes.

Writing more explicitly,

$$\vec{u}_L = \ \ \phi, \quad \vec{\ } \times \vec{u}_L \equiv 0 \tag{5.27}$$

$$\vec{u}_T = \vec{\ } \times \vec{\psi}, \quad \vec{\ } \bullet \vec{u}_T \equiv 0 \tag{5.28}$$

we obtain

$$\frac{\partial^2 \vec{u}_L}{\partial t^2} = V_L^2\ \ ^2\vec{u}_L, \quad \frac{\partial^2 \vec{u}_T}{\partial t^2} = V_T^2\ \ ^2\vec{u}_T \tag{5.29}$$

Copyright © 2012. Taylor & Francis Group. All rights reserved.

Cheeke, J. David N.. Fundamentals and Applications of Ultrasonic Waves, Taylor & Francis Group, 2012. ProQuest Ebook Central, http://ebookcentral.proquest.com/lib/ub-wuerzburg/detail.action?docID=945471.
Created from ub-wuerzburg on 2021-12-11 15:16:12.

where

$$V_L = \sqrt{\frac{c_{11}}{\rho}} \quad \text{and} \quad V_T = \sqrt{\frac{c_{44}}{\rho}} \tag{5.30}$$

The vectorial properties of $\vec{u}_L$ and $\vec{u}_T$ confirm the previous conclusions. Since $\vec{} \bullet \vec{u}_T \equiv 0$, there is no change in volume associated with $\vec{u}_T$ (hence $\vec{\psi}$), which is as it must be for a transverse wave. Likewise $\vec{} \times u_L \equiv 0$ means that there is no change in angle or rotation associated with $\vec{u}_L(\phi)$, which is characteristic of a longitudinal wave. Displacement deformations for typical longitudinal and transverse waves are shown in Figure 5.1.

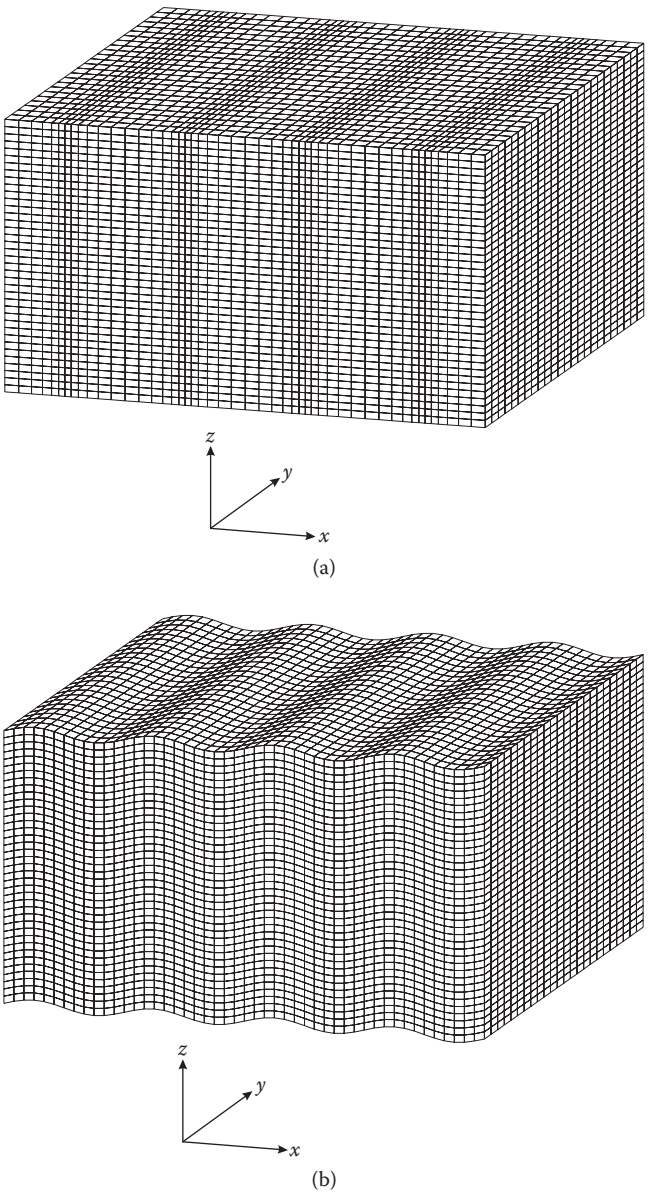

FIGURE 5.1 Grid diagrams for the deformations caused by bulk plane waves propagating along the x axis. (a) Longitudinal waves. (b) Transverse waves polarized in the z direction.

Copyright © 2012. Taylor & Francis Group. All rights reserved.

Cheeke, J. David N.. Fundamentals and Applications of Ultrasonic Waves, Taylor & Francis Group, 2012. ProQuest Ebook Central, http://ebookcentral.proquest.com/lib/ub-wuerzburg/detail.action?docID=945471.
Created from ub-wuerzburg on 2021-12-11 15:16:12.

The energy and acoustic power relations for both longitudinal and transverse waves can be extended directly from their 1D forms. Thus, the potential and kinetic energies per unit volume are

$$u_{\mathrm{P}} = T_{ij}\frac{\mathrm{d}S_{ij}}{\mathrm{d}t} \tag{5.31}$$

and

$$u_{\mathrm{K}} = \frac{1}{2}\rho u_i^{\bullet 2} \tag{5.32}$$

The instantaneous Poynting vector $\mathcal{P}$, which gave a power flow $-vT$ per unit area in one dimension, becomes straightforwardly

$$\mathcal{P}_j(x_i, t) = -T_{ij}\frac{\partial u_i}{\partial t} \tag{5.33}$$

in three dimensions.

The above analysis shows that bulk waves consist of one longitudinal mode and two mutually orthogonal transverse modes. A standard terminology has been developed to identify these modes, and it is used universally to describe bulk and guided modes. The plane of the paper (saggital plane) contains the x axis and the surface normal (z axis). The y axis is perpendicular to this plane. Calculations for bulk modes will then be carried out with longitudinal waves and transverse waves with polarization in the plane of the paper both having wave vectors in the plane of the paper. These may also be referred to as pressure (P) and shear vertical (SV) modes, respectively, following the original geophysical terminology. Transverse waves propagating in the saggital plane with polarization perpendicular to the paper (y axis) are called shear horizontal (SH) modes. In this language, the acoustic modes conveniently break up into the orthogonal, uncoupled groups of saggital (P, SV) and SH modes.

5.3 MATERIAL PROPERTIES

We discuss first the propagation properties primarily associated with the sound velocity. This is followed by a summary of the principal sources of attenuation of ultrasonic waves. It is important to have a feeling for the orders of magnitude of the densities, sound velocities, and acoustic impedances of different materials. Representative values are given in Table 5.1, which should be compared with those of Table 3.1. A cursory glance confirms what we already know, namely that most solids have densities and sound velocities much greater than water, which are again much greater than those in air. This state of affairs is most usefully summarized in a single parameter, the acoustic impedance, given for longitudinal and transverse waves in Figures 5.2 and 5.3. It will be shown in Chapter 7 that the amplitude reflection coefficient at the interface between two media is given by

$$R = \frac{Z_2 - Z_1}{Z_2 + Z_1} \tag{5.34}$$

where the incident wave is from medium 1 and partially transmitted into medium 2. Two limiting cases are of interest. If $Z_2 = Z_1$, the reflection coefficient is zero; it is as if the wave continued traveling forward in a single medium. On the other hand, if $Z_2 \gg Z_1$ then $R \sim 1$; that is, the wave is almost totally reflected. These two limits are important because in most ultrasonic applications one is either trying to keep the wave from going into another medium (e.g., reflecting face of a delay line) or, contrariwise, maximize its transmission from one medium into another (e.g., maximum transmission from a transducer into a sample in NDE). Examples of this type come up repeatedly and in practical applications it is important to have an intuitive grasp of the magnitude of the acoustic impedances involved.

Copyright © 2012. Taylor & Francis Group. All rights reserved.

Cheeke, J. David N.. Fundamentals and Applications of Ultrasonic Waves, Taylor & Francis Group, 2012. ProQuest Ebook Central, http://ebookcentral.proquest.com/lib/ub-wuerzburg/detail.action?docID=945471.
Created from ub-wuerzburg on 2021-12-11 15:16:12.

TABLE 5.1
Acoustic Properties of Various Solids

Solid	V_L (km/s)	V_S (km/s)	ρ (10^3 kg/m^3)	Z_L (MRayls)	Z_S (MRayls)
Epoxy	2.70	1.15	1.21	3.25	1.39
RTV-11 Rubber	1.05		1.18	1.24	
Lucite	2.70	1.10	1.15	3.1	1.25
Pyrex glass	5.65	3.28	2.25	13.1	7.62
Aluminum	6.42	3.04	2.70	17.33	8.21
Brass	4.70	2.10	8.64	40.6	18.15
Copper	5.01	2.27	8.93	44.6	20.2
Gold	3.24	1.20	19.7	63.8	23.6
Lead	2.16	0.7	24.6	7.83	0.44
Fused quartz	5.96	3.75	2.2		
Lithium niobate (*z*)	7.33		4.7	34.0	
Zinc oxide (*z*)	6.33		5.68	36.0	
Steel	5.9	3.2	7.90	46.0	24.9
Beryllium	12.90	8.9	1.87	24.10	16.60
Sapphire (*z*)	11.1	6.04	4.0	44.4	24.2

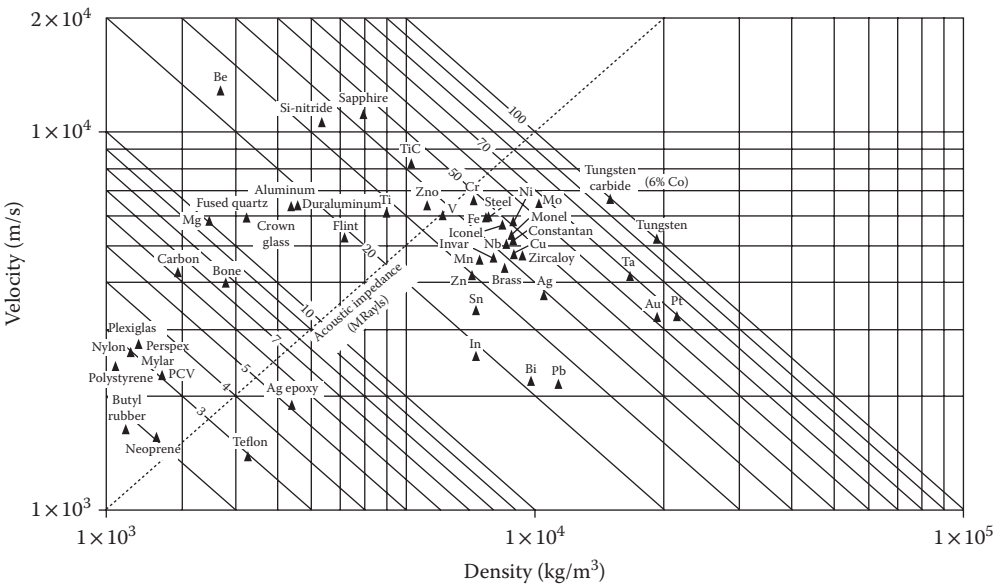

FIGURE 5.2 Density–sound velocity/longitudinal characteristic acoustic impedance plots on a log–log scale for various solids. (Based on a graph by Eggleton, R. C., described in Jipson, V. B., "Acoustical Microscopy at Optical Wavelengths," PhD thesis, E. L. Ginzton Laboratory, Stanford University, Stanford, CA, 1979.)

For order of magnitude purposes, let us take a typical solid as having a density of 5000 kg·m^{-3} and a longitudinal velocity of 5000 m·s^{-1}, giving a longitudinal acoustic impedance of 25 MRayls where the Rayl (after Lord Rayleigh) is the MKS unit of acoustic impedance. Referring to Table 5.1, it is seen that the range for typical solids is 10–15 MRayls, with some high-density, high-velocity materials such as tungsten going up to 100 MRayls. By comparison, plastics and rubbers are in the

Copyright © 2012. Taylor & Francis Group. All rights reserved.

Cheeke, J. David N.. Fundamentals and Applications of Ultrasonic Waves, Taylor & Francis Group, 2012. ProQuest Ebook Central, http://ebookcentral.proquest.com/lib/ub-wuerzburg/detail.action?docID=945471.
Created from ub-wuerzburg on 2021-12-11 15:16:12.

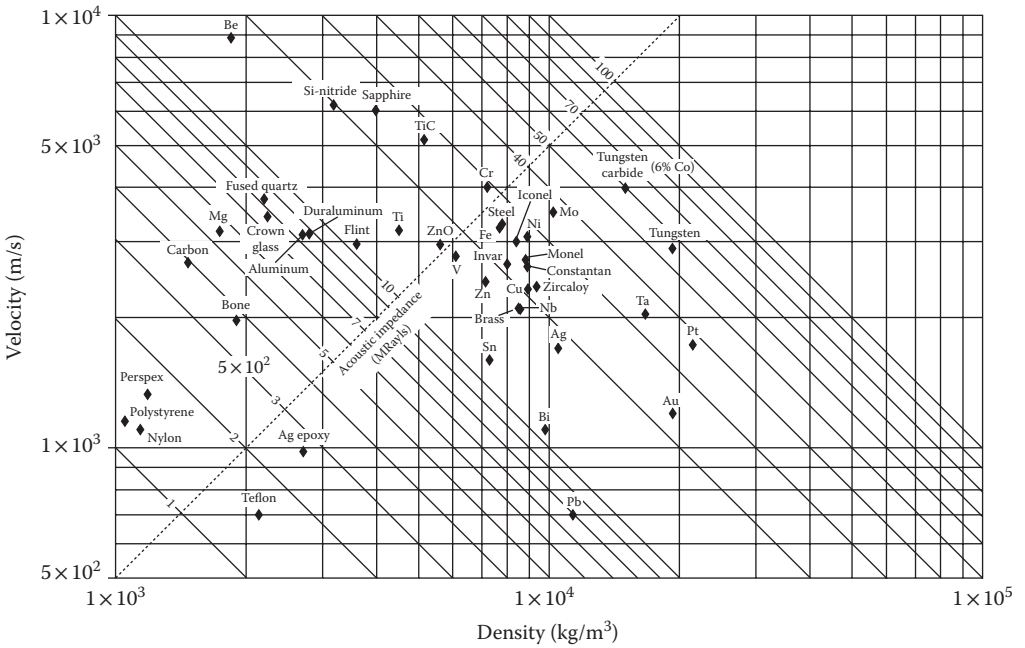

FIGURE 5.3 Density–sound velocity/transverse characteristic acoustic impedance plots on a log–log scale for various solids. (Based on a graph by Eggleton, R. C., described in Jipson, V. B., "Acoustical Microscopy at Optical Wavelengths," PhD thesis, E. L. Ginzton Laboratory, Stanford University, Stanford, CA, 1979.)

range 1–5 MRayls, water 1.5 MRayls, and air is orders of magnitude less at 400 Rayls. This is why, for off-the-cuff calculations, a solid–air or liquid–air interface can be taken to first order as totally reflecting. In some cases, the required range of sound velocities or densities of a material is fixed by other considerations (e.g., focusing properties of acoustic lenses), in which case Figures 5.2 and 5.3 are useful for showing at a glance the possible choices of common materials in a given acoustic impedance range.

The densities of materials used in ultrasonic applications are temperature independent except for very special cases. This, however, is not the case for sound velocity. From absolute zero up to room temperature, the sound velocity typically decreases by about 1%, giving a slope at room temperature $(1/V)(\delta V/\delta T) \sim 10^{-4}\ \mathrm{K}^{-1}$. This is an intrinsic, thermodynamic effect that has its origin in the nonlinear acoustic properties of solids. It can be a particularly important consideration in the design and operation of acoustic surface wave devices and acoustic sensors.

Ultrasonic attenuation α in solids is a difficult parameter to specify in absolute terms, yet it is very important. In fundamental physical acoustics, a quantitative knowledge of α is often very useful for the validation of models and theories; verification of the BCS theory of superconductivity is one example, and there are many others. In applications and devices, the emphasis is almost always on reducing the attenuation as much as possible to improve device performance. In some special cases (transducer backings), the opposite is desired. In either case it must be controlled, and to do this it must be understood. This is not always easy as there are many contributing factors that are difficult to control going from the state of the sample to the measuring conditions. The attenuation in many samples is almost entirely determined by the fabrication and sample preparation process. As for the measurement, to obtain an accurate value of α we require in principle a perfect exponential decay of echoes in the sample, as explained in Chapter 13. This is almost never achieved in practice even under the best laboratory conditions. Hence, accurate absolute attenuation values are never quoted and in most cases the relative attenuation is measured as a function of some parameter, such as temperature, pressure, or magnetic field. Due to these difficulties, in fundamental studies it

Copyright © 2012. Taylor & Francis Group. All rights reserved.

Cheeke, J. David N.. Fundamentals and Applications of Ultrasonic Waves, Taylor & Francis Group, 2012. ProQuest Ebook Central, http://ebookcentral.proquest.com/lib/ub-wuerzburg/detail.action?docID=945471.
Created from ub-wuerzburg on 2021-12-11 15:16:12.

is often more useful to measure the absolute and/or relative velocity variations, which are much less prone to experimental artifacts.

In the following, we consider mainly the principal sources of attenuation, their order of magnitude in different materials, and their variation with frequency and temperature. Only longitudinal waves will be covered unless stated otherwise. Sources of attenuation will be divided into two classes: intrinsic (thermal effects, elementary excitations) and those due to imperfections (impurities, grain boundaries, dislocations, cracks, etc., are some of the usual suspects). Detailed discussions of the physical origin of attenuation in solids are given in Beyer and Letcher [1] and Truell et al. [2].

The intrinsic component of ultrasonic attenuation for a solid can be described from a macroscopic point of view, much as was done for liquids in Chapter 3. In the classical attenuation in a fluid, we have

$$\alpha = \frac{\omega^2}{2\rho_0 V_i^2}\ \eta + \frac{\lambda}{\lambda + 2}\ \frac{K}{C_V} \tag{5.35}$$

where $\Delta\lambda$ is the difference between isothermal and adiabatic Lamé coefficients. C_V is the specific heat at constant volume per unit volume, V_i represents longitudinal or shear velocity, and the other symbols have their usual meanings. We notice immediately that since V_i^2 appears in the denominator and since on average $V_S = V_L/2$, the intrinsic shear attenuation is expected to dominate.

In solids, it is more usual to approach the problem from a phonon point of view where the crystal lattice is represented by a gas of interacting phonons of energy $\hbar\omega$, where ω is the frequency of a lattice mode. In this picture, the ultrasonic wave is composed of very many low-frequency phonons at the ultrasonic frequency. The attenuation divides into the same two components as above, namely thermoelastic loss and phonon viscosity. For simplicity, we consider the case of longitudinal waves in an insulating solid where the heat is carried by the thermally excited phonons always present at temperature T, called the thermal phonons. For thermoelastic loss, the regions compressed by the ultrasonic wave are heated and the excess energy is transported by thermal phonons to the rarefaction regions, which are cooler. As above, this component of attenuation can be written

$$\alpha = \frac{1}{2V}\frac{c}{c_0}\frac{\omega^2\tau_{th}}{1+\omega^2\tau_{th}^2} \tag{5.36}$$

where $\Delta c = c_1 - c_0$ and c_0 are the relaxed and unrelaxed elastic moduli, respectively (i.e., isothermal and adiabatic). The collision time for the thermal phonons is

$$\tau_{th} = \frac{K}{C_P V^2} \tag{5.37}$$

where C_P is the heat capacity at constant pressure per unit volume. After considerable analysis, this can be written in the form

$$\alpha = \frac{\gamma_G^2 C_V T}{2\rho V^3}\frac{\omega^2\tau_{th}}{1+\omega^2\tau_{th}^2} \tag{5.38}$$

where γ_G is the Gruneisen constant $= 3\beta K/C_V$ and β is the linear expansion coefficient.

The viscosity component corresponds to the so-called Akhiezer loss and follows from a detailed calculation of the phonon–phonon interaction. The physical model is that application of a step function strain leads to an effective temperature change of the phonon modes, leading to a redistribution of their populations by the phonon–phonon interaction. There is a phase lag in this process and it leads to energy dissipation and hence attenuation. Very detailed calculations were carried out by

Copyright © 2012. Taylor & Francis Group. All rights reserved.

Cheeke, J. David N.. Fundamentals and Applications of Ultrasonic Waves, Taylor & Francis Group, 2012. ProQuest Ebook Central, http://ebookcentral.proquest.com/lib/ub-wuerzburg/detail.action?docID=945471.
Created from ub-wuerzburg on 2021-12-11 15:16:12.

Bommel and Dransfeld [3], Woodruff and Ehrenreich [4], and Mason and Bateman [5]. Only the final result will be given here, which is of the form, for $\omega\tau_{th} \ll 1$ at room temperature,

$$\frac{\alpha}{f^2} = R\bar{\gamma}_G^{-2} \tag{5.39}$$

where $\bar{\gamma}_G$ is a modified form of the Gruneisen constant, treated as an adjustable parameter and

$$R \propto \frac{K_{\theta_D}}{M\theta_D^4 V_0^{2/3}} \tag{5.40}$$

where

K_{θ_D} is the thermal conductivity at the Debye temperature θ_D, M is the average atomic mass, and V_0 is the atomic volume.

The model predicts an attenuation that is constant and varies as f^2 at room temperature in agreement with experiment. It predicts that the attenuation will be decreased for materials with high Debye temperature and low thermal conductivity. This makes sense physically as the first condition means less thermal agitation at a given temperature while the second weakens the relaxation effect.

There are, of course, almost an infinite number of ways in which imperfections can contribute to α. Physical and chemical imperfections are usually badly characterized and theory exists only for the most simple cases. In this situation, only the simplest and most important case, that of polycrystals, will be briefly described here.

Although crystals exhibit the basic intrinsic attenuation, the same is not true of polycrystals. Polycrystals are an agglomeration of many grains, each having an orientation different from its neighbors. Zener [6] showed that the grains produce a thermal relaxation effect similar to that described previously. However, the most important effect is the scattering due to the misorientation of the grains, each of which has a different effective elastic constant in the direction of propagation. Full details have been given by Papadakis [7]. Very roughly, for scattering of an ultrasonic wave of wavelength λ by grains of a mean diameter D

$$\alpha = \beta_1 f + \beta_2 f^4, \quad \lambda \geq 3D \tag{5.41}$$

where the first term is due to hysteresis and the second corresponds to Rayleigh scattering by the grains. Papadakis shows that this term can be written as

$$\alpha = \beta f^4 S \tag{5.42}$$

where β is the average grain volume and S is a material parameter that varies widely. In the opposite limit where $\lambda \ll D, \alpha \sim 1/D$ and is independent of frequency. A wealth of experimental data is reported by Papadakis [7]. Generally, Rayleigh scattering is observed in the range 1–10 MHz with an order of magnitude attenuation of roughly 1 dB·cm^{-1} at 10 MHz. At higher frequencies, the slope generally levels off to an f^2 variation. Average grain sizes are the order of 100 μm.

5.4 VISCOELASTIC SOLIDS

A viscoelastic solid is an intermediate case between solids and liquids. Recall that for linear elastic solids in one dimension, we use Hooke's law, $T = ES$. This implies that when we apply a stress T, a strain S is induced, which returns to zero when the stress is removed. It also implies that when the stress is applied we have stored elastic energy as given by Equation 5.8. If the solid also has viscous properties like a liquid then these can be described by the viscosity coefficient η where $T = \eta \, dS/dt$.

Copyright © 2012. Taylor & Francis Group. All rights reserved.

Cheeke, J. David N.. Fundamentals and Applications of Ultrasonic Waves, Taylor & Francis Group, 2012. ProQuest Ebook Central, http://ebookcentral.proquest.com/lib/ub-wuerzburg/detail.action?docID=945471.
Created from ub-wuerzburg on 2021-12-11 15:16:12.

Very generally, a viscoelastic solid contains both these elements and the way in which they are combined depends on the exact model used to represent the solid, as will be developed shortly. Viscoelastic properties are important in the real world as all solids possess them to some extent, the linear elastic solid being an idealized case. In some important industrial materials such as polymers, wood, epoxies, metals at high temperature, and so on, the viscoelastic properties are predominant. This is also true in other important areas, such as tissues studied in medical ultrasonics.

The form of the viscous term indicates that the $T(S)$ relation for viscoelastic solids will depend on time, so we will distinguish time independent or quasi-static behavior from the high-frequency regime. Considering first the quasi-static case, if a step function stress is applied then the strain will build up gradually and then relax slowly when the stress is lifted. This leads to the following quasi-static phenomena: (1) creep, where the strain increases slowly with time at constant stress, (2) anelastic solids, a subset of viscoelastic solids, where the strain returns to zero after removal of the load, and (3) hysteresis, which occurs for cyclical loading where there is a phase lag between stress and strain, which leads to dissipation as shown in Figure 3.3.

The dynamic properties at finite frequencies are also very important. At low frequencies, they have been studied as internal friction by observing the vibration and decay of a reed-shaped sample. If the stress varies sinusoidally as $T(t) = T_0 \sin \omega t$ then the strain will also vary sinusoidally with a phase lag δ, $S(t) = S_0 \sin(\omega t - \delta)$. The loss angle δ gives a measure of the viscoelastic damping in the material. These are the losses measured by internal friction, often expressed in the form of $\tan \delta$. In terms of the damping of a vibrating viscoelastic sample, other common measures often quoted are (1) $Q = (\tan \delta)^{-1}$, (2) the log decrement $\Lambda = \pi \tan \delta$ for the free decay of vibration of a rod sample, and (c) attenuation $\alpha\lambda = 2\pi \tan(\delta/2)$ nepers per wavelength.

5.4.1 Viscoelastic Models

In the spirit of Chapter 2, complex viscoelastic media can be modeled by various configurations of elastic and viscous elements, much as complex electrical circuits can be modeled by an equivalent circuit comprising simple circuit elements such as *R, L*, and *C*. Two simple models are widely used, and they form the basis for more complicated configurations [8]. In both cases, the elastic element is described by:

$$T = GS \tag{5.43}$$

where T is the applied stress, S is the strain, and G is the appropriate modulus. As above, the viscous element is described by:

$$T = \eta \mathrm{d}S/\mathrm{d}t \tag{5.44}$$

The way in which T and S for each element are combined depends on the model used.

Maxwell model. In this case, shown in Figure 5.4a, the elastic and viscous elements are in series. The situation is analogous to the linear chain model in solid state physics, so that the strains of the two elements are added algebraically. We have:

$S = S_1 + S_2$, leading directly to $\dot{S} = \dot{S}_1 + \dot{S}_2$.

Substituting for S_1 and S_2 from the stress–strain relations (5.43) and (5.44):

$$\dot{S} = \frac{\dot{T}}{G} + \frac{T}{\eta}$$

Using $T = T_0 e^{j\omega t}$, $S = S_0 e^{j\omega t}$, $T_0 = G(\omega) S_0$, and $G_0(\omega) = G_{10} + jG_{20}$, we obtain:

$$G_{10} = \frac{G\omega^2}{G\eta^2 + \omega^2} \tag{5.45}$$

Copyright © 2012. Taylor & Francis Group. All rights reserved.

Cheeke, J. David N.. Fundamentals and Applications of Ultrasonic Waves, Taylor & Francis Group, 2012. ProQuest Ebook Central, http://ebookcentral.proquest.com/lib/ub-wuerzburg/detail.action?docID=945471.
Created from ub-wuerzburg on 2021-12-11 15:16:12.

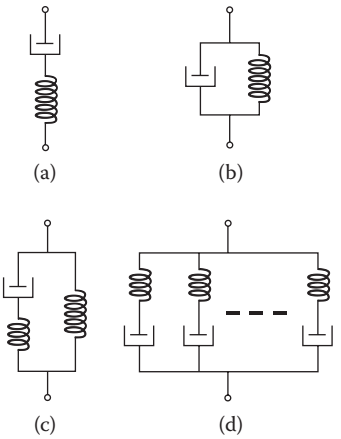

FIGURE 5.4 Models for viscoelastic media. (a) Maxwell model. (b) Voigt model. (c) Modified Voigt model or Kelvin model. (d) Configuration showing many Maxwell circuits in parallel.

$$G_{20} = \frac{\omega G^2 \eta}{G\eta^2 + \omega^2} \tag{5.46}$$

Generally it has been found that the Maxwell model is satisfactory for describing simple relaxation phenomena, which correspond to molecular rearrangement. If many relaxation times are involved corresponding to different molecular species then a generalized Maxwell model is used, grouping many Maxwell circuits in parallel, as shown in Figure 5.4d. In practical applications, the Maxwell model has been found to be useful for such problems as polymers near the melting point, fresh concrete, and the behavior of many metals close to the melting point. It does not describe creep effects adequately, which can be better treated with the Voigt model that follows.

Voigt model. The Voigt model involves elastic and viscous elements in parallel, as shown in Figure 5.4b. Here, the strain S is the same for both spring and dashpot, so that the stress is the sum of that in the two elements:

$$T = T_1 + T_2 \tag{5.47}$$

Using Equations 5.43 and 5.44

$$T = GS + \eta \frac{\mathrm{d}S}{\mathrm{d}t} \tag{5.48}$$

Again, using

$$T_0 = G^*(\omega),\ G^* = G_1^* + jG_2^* \tag{5.49}$$

We find:

$$G_1^* = G \tag{5.50}$$

$$G_2^* = \omega\eta \tag{5.51}$$

For both models we see that the stress–strain relation is the same as for the purely elastic case but that the modulus is now complex and frequency dependent. The real part corresponds to stored energy and the imaginary part to the loss. A variant of the Voigt model, the Kelvin model, involves placing a spring in series with the dashpot, as shown in Figure 5.4c.

Copyright © 2012. Taylor & Francis Group. All rights reserved.

Cheeke, J. David N.. Fundamentals and Applications of Ultrasonic Waves, Taylor & Francis Group, 2012. ProQuest Ebook Central, http://ebookcentral.proquest.com/lib/ub-wuerzburg/detail.action?docID=945471.
Created from ub-wuerzburg on 2021-12-11 15:16:12.

5.4.2 Wave Propagation

Equation 5.48 is a generalization of Hooke's law to take into account the viscous properties of the solid. In three dimensions, we can write this as

$$T_{ij} = c_{ijkl} S_{kl} + \eta_{ijkl} \frac{\delta S_{kl}}{\delta t} \tag{5.52}$$

where the viscosity tensor η_{ijkl} has the same symmetry as the elastic constant c_{ijkl} and both are, by inspection, fourth rank tensors. Substituting Equation 5.52 into Newton's law, Equation 5.11, we have

$$\rho \frac{\partial^2 u_i}{\partial t^2} = c_{ijkl} \frac{\partial^2 u_l}{\partial x_j \partial x_k} + \eta_{ijkl} \frac{\partial^3 u_l}{\partial x_j \partial x_k \partial t} \tag{5.53}$$

This equation could be solved for the isotropic case in analogy with the results of Section 5.2. This has been carried out in Royer and Dieulesaint [9] using viscosity components η_{11} for longitudinal and η_{22} for shear components. A similar calculation has been carried out in Auld [10] for the case of a shear wave propagating along the edge of a cubic crystal. The results are

$$k = \omega \left(\rho / c_{44}\right)^{1/2} \quad 1 + \frac{3}{8} \quad \frac{\omega \eta_{44}}{c_{44}} \quad {}^{2} \quad {}^{-1/2} \tag{5.54}$$

$$\alpha = \frac{\omega^2}{2} \left(\rho / c_{44}\right)^{1/2} \quad \frac{\eta_{44}}{c_{44}} \tag{5.55}$$

These results are analogous to those for a viscous fluid given in Equations 3.69 and 3.70, the main effect being a small increase in the phase velocity and an intrinsic attenuation which varies as ω^2.

There have been many reports of using ultrasonics to characterize viscoelastic materials both for fundamental work on new materials and for applications in medicine and NDE, and two examples will be given. Recent work has suggested that tissues are best described by the Voigt model or a modified Voigt model. Catheline et al. [11] have carried out transient elastography measurements using plane shear waves in agar–gelatin phantoms and bovine muscles. Results in the range 20–1000 Hz were interpreted in terms of rheological models based on the Maxwell and Voigt representations. While both models predicted similar values of elasticity, the results for viscosity were very different, the Voigt model leading to values closer to those reported in the literature. A similar conclusion was reached for the attenuation versus frequency behavior.

Yang and Church [12] carried out systematic shear reflectivity on porcine skeletal muscle, liver, and kidney. They obtained negative storage moduli, implying negative shear moduli for the Maxwell, Kelvin, and Voigt models. The results are characteristic of systems possessing prestored energy. It was found that placing an inertial term (mass) with the Voigt model provided a suitable viscoelastic description. This can be seen by considering the simple 1D analysis for such a dashpot–spring–mass system, where the force relation can be written

$$F = \left(k - \omega^2 m + j\omega R_{\mathrm{m}}\right) x$$

Copyright © 2012. Taylor & Francis Group. All rights reserved.

Cheeke, J. David N.. Fundamentals and Applications of Ultrasonic Waves, Taylor & Francis Group, 2012. ProQuest Ebook Central, http://ebookcentral.proquest.com/lib/ub-wuerzburg/detail.action?docID=945471.
Created from ub-wuerzburg on 2021-12-11 15:16:12.

where x = displacement, k = spring constant, m = mass, R_m = damping resistance, and ω = driving frequency. Thus, adding a mass corresponds to adding a negative real part to the complex force. For the viscoelastic medium, the corresponding stress–strain relation for modulus G is

$$T = G_0 S + G_\infty \tau_s \frac{\delta S}{\delta t} + G_\rho \tau_s^2 \frac{\partial^2 S}{\partial t^2}$$

where τ_s is the relaxation time. Here, G_∞ relates to the damping term and G_ρ to the inertial term. Clearly when τ_s is small this term can be neglected. Conversely, this correction to the Voigt model is necessary when τ_s is large and the frequency is high.

SUMMARY

Displacement (velocity) potentials consist of a scalar (ϕ) and vector ($\bar{\Psi}$) potentials. ϕ governs the propagation of pure longitudinal waves and $\bar{\Psi}$ that of shear waves.

3D wave equation for solids has solutions that are pure longitudinal and pure shear waves. The two equations are decoupled, which has the consequence that longitudinal and shear waves are independent modes of propagation in bulk solids.

Pure longitudinal bulk waves have elastic constant $\lambda + 2\mu$.

Pure shear bulk waves have elastic constant μ.

Acoustic Poynting vector in a 3D isotropic solid is given by $\mathcal{P}_j = -T_{ij}\left(\delta u_i/\delta t\right)$.

Saggital modes have propagation vectors and polarization vectors in the saggital plane (plane of the paper).

SH modes have propagation vector in the saggital plane and polarization vector perpendicular to that plane.

Attenuation in isotropic solids is due to a variety of defects and elementary excitations, including impurities, grain boundaries, dislocations, cracks, phonons, electrons, magnetic excitations, and so on.

Viscoelastic solids are described by both elastic and viscous properties.

Creep is due to an increase in strain with time at constant stress.

In an anelastic solid, the strain returns to zero after the removal of stress.

Maxwell model of a viscoelastic solid has the elastic and viscous elements in series. It is useful for describing relaxation phenomena and the behavior of solids close to the melting point.

Voigt model has the elastic and viscous elements in parallel. It has been found to be useful to represent the ultrasonic properties of tissues.

QUESTIONS

1. For the 1D solid, derive the relation $\delta S/\delta t = \delta v/\delta z$.
2. Rederive Equations 5.25 and 5.26 in terms of λ and μ.
3. Consider a transversely isotropic solid, which is isotropic in a plane perpendicular to a principal axis. To what crystal structure is this equivalent? Enumerate the possible saggital and SH modes for the transversely isotropic solid. You should consider modes both parallel and perpendicular to the principal axis.
4. From Figures 5.2 and 5.3 and Table 5.1, determine the three solids with the lowest and highest acoustic impedance, respectively. Do the same for liquids using Table 3.1. Calculate the energy transmission coefficient at normal incidence for the case of extreme acoustic mismatch in the media chosen.
5. A plane wave of 5 MHz is incident on a steel plate. Calculate the required thickness for this wave to be retarded in phase by 90° with respect to a wave that passes through a large hole in the plate.

Copyright © 2012. Taylor & Francis Group. All rights reserved.

Cheeke, J. David N.. Fundamentals and Applications of Ultrasonic Waves, Taylor & Francis Group, 2012. ProQuest Ebook Central, http://ebookcentral.proquest.com/lib/ub-wuerzburg/detail.action?docID=945471.
Created from ub-wuerzburg on 2021-12-11 15:16:12.

REFERENCES

1. Beyer, R. T. and Letcher, S. V., *Physical Ultrasonics*, Academic Press, New York, 1969.
2. Truell, R., Elbaum, C., and Chick, B. B., *Ultrasonic Methods in Solid State Physics*, Academic Press, New York, 1969.
3. Bommel, H. and Dransfeld, K., Attenuation of hypersonic waves in quartz, *Phys. Rev. Lett.*, 2, 249, 1959.
4. Woodruff, T. O. and Ehrenreich, H., Absorption of sound in insulators, *Phys. Rev.*, 123, 1553, 1961.
5. Mason, W. P. and Bateman, T. B., Ultrasonic wave propagation in pure silicon and germanium, *J. Acoust. Soc. Am.*, 36, 644, 1964.
6. Zener, C., Internal friction in solids. Pt. II: General theory of thermoelastic internal friction, *Phys. Rev.*, 53, 90, 1938.
7. Papadakis, E. M., Scattering in polycrystalline media, in *Methods of Experimental Physics: Ultrasonics*, Edmonds, P. D., Ed., Academic Press, New York, 1981, chap. 5.
8. Rose, J. L., *Ultrasonic Waves in Solid Media*, Cambridge University Press, Cambridge, UK, 1999.
9. Royer, D. and Dieulesaint, E., *Elastic Waves in Solids 1*, Springer-Verlag, Berlin, Heidelberg, New York, 2000.
10. Auld, B. A., *Acoustic Fields and Waves in Solids 1*, 2nd ed., Krieger Publishing, Malabar, FL, 1990.
11. Catheline, S., Gennison, J-L., Delon, G., Fink, M., Sinkus, R., and Abouelkaram, S., Measurement of viscoelastic properties of homogeneous soft solid using transient elastography: An inverse problem approach, *J. Acoust. Soc. Am.*, 116, 3734, 2004.
12. Yang, X. and Church, C. C., A simple viscoelastic model for soft tissues in the frequency range 6–20 MHz, *IEEE Trans. UFFC*, 53, 1404, 2006.

Copyright © 2012. Taylor & Francis Group. All rights reserved.

Cheeke, J. David N.. Fundamentals and Applications of Ultrasonic Waves, Taylor & Francis Group, 2012. ProQuest Ebook Central, http://ebookcentral.proquest.com/lib/ub-wuerzburg/detail.action?docID=945471.
Created from ub-wuerzburg on 2021-12-11 15:16:12.

Copyright © 2012. Taylor & Francis Group. All rights reserved.

Cheeke, J. David N.. Fundamentals and Applications of Ultrasonic Waves, Taylor & Francis Group, 2012. ProQuest Ebook Central, http://ebookcentral.proquest.com/lib/ub-wuerzburg/detail.action?docID=945471.
Created from ub-wuerzburg on 2021-12-11 15:16:12.