# Determination of the Planck constant and the Boltzmann constant

I. Kaiser, J. Hölzle and S. Scheel

The Planck constant was determined using the photoelectric effect to be $h = (6.42 \pm 0.22) \cdot 10^{-34}$ Js and is consistent with the literature value within its error. Furthermore, the Boltzmann constant was determined by measuring the diffusion current of a npn-transistor at different temperatures. The measured values were averaged and the determined value follows as $k_B = (1.3780 \pm 0.0025) \cdot 10^{-23} \frac{\mathrm{J}}{\mathrm{K}}$. This value does not match the literature value within its $\sigma-$band.

Executed: January 12, 2022
First submittion: January 19, 2022

## 1. Introduction

Fundamental constants play an indispensable role in physics. As they are constant in time and space, they apply in all reference systems. This illustrates the need for precise determination, to which the following experiment is devoted in the case of two much-used constants. First the Planck constant $h$ will be determined. As a central building block of quantum mechanics and as a milestone in its discovery, the Planck constant is extraordinarily important. The constant links the energy of a photon with its frequency. Due to its fundamental nature it is used to define the kilogram. In the following, the constant is determined by using the photoelectric effect. In the following the Boltzmann constant $k_B$ will be determined. This constant gives the proportionality factor that relates the average relative kinetic energy of particles in a gas with the thermodynamic temperature of the gas and therefore can be seen as a scaling factor linking energy and temperature scales. Moreover, it is used to define the Kelvin scale.

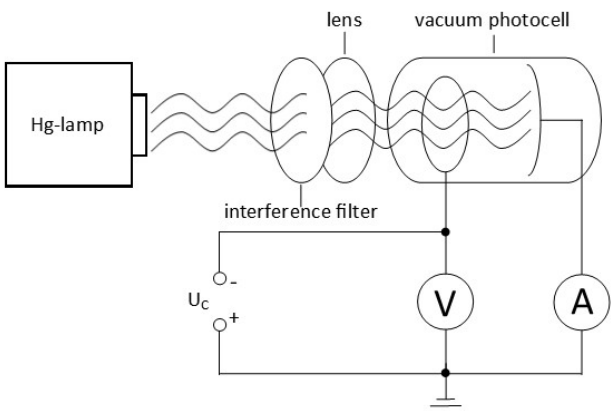


**Fig. 1:** The light from the Hg lamp becomes monochromatic at the interference filter and focuses into the photocell with the converging lens. The light excites electrons on the platinum surface, which can then migrate to the anode by overcoming the work function and the opposing field. The resulting Anode current and the counter voltage are measured.

## 2. Planck constant

To determine Planck's constant, the photoelectric effect was used. For this purpose, a photocell was exposed to different wavelengths. A set-up as shown in figure 1 was used. In the beam path of the mercury lamp there is first the interference filter followed by the converging lens and at the end the photocell. To reduce stray light, the lamp and the photocell were equipped with shutters. Through the different interference filters, the photocell was irradiated with monochromatic light at wavelengths between 360nm and 580nm. When the light with frequency $\nu$ hits the platinum cathode, the photons transfer their whole energy $E_\nu = h\nu$ to valence electrons of the cathode. This allows them to release electrons from the cathode if their energy E is greater than the work function $W$ of the cathode. The energy of the released electrons can now be determined with the help of the counter-field method. Only the electrons whose energy is greater than the applied electric field can contribute to the anode current. Thus the electrons have the energy $E \geq eU$. The following equation applies to electrons with exactly the field energy.

$$E = eU_T = h\nu - W \tag{1}$$

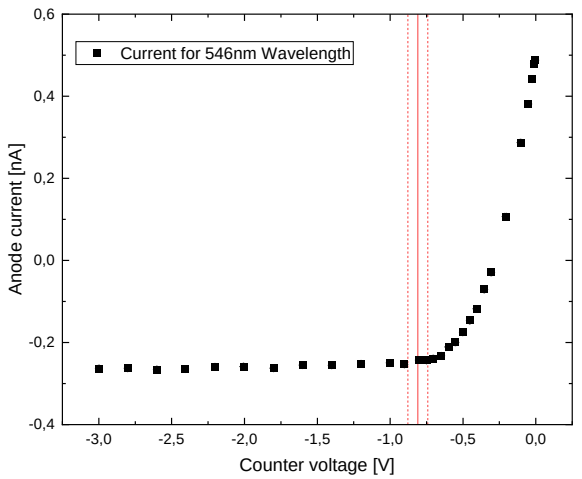


**Fig. 2:** With 546nm wavelength the anode current as a function of the counter voltage is almost constant up to $U_T = (0.81 \pm 0.069)$ V. After that it appears exponential.

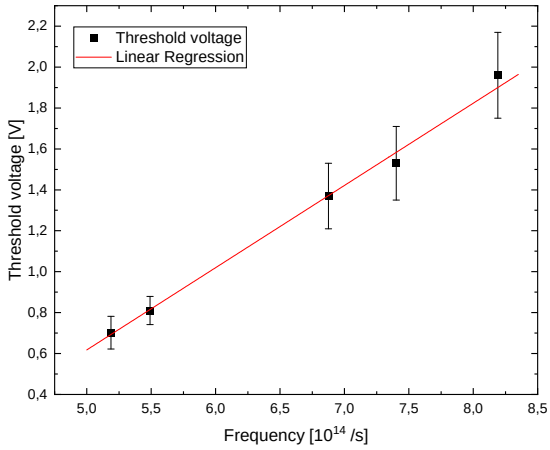


**Fig. 3:** The threshold voltage is plotted against the frequency of the light. From the linear regression the slope was determined to be $m = (0.401 \pm 0.014)$.

With the elemen tal charge e, defined as $e = 1.602176634 \cdot 10^{-19}$ C [4] and $U_T$ as the threshold voltage. To determine the threshold voltage, the anode current was measured as a function of the counter voltage. At room temperature and between threshold voltage and saturation range this diode characteristic can be described using the Shockley equation. For voltages below the threshold voltage, the characteristic curve should be asymptotic to a negative constant. The cut-off voltage is hence the transition point from a linear to an exponential curve. Figure 1 shows an example of the determination of this voltage and its deviation. To determine Planck's constant, the cut-off voltage is plotted against the frequencies of the radiation. With equation 1 it follows that the slope of this course is $\frac{h}{e}$. Thus the Planck constant follows to be

$$h = (6.42 \pm 0.22) \cdot 10^{-34} \text{ Js}.$$

This value agrees with the value of $h = 6.62607015 \cdot 10^{-34}$ Js [5] in the context of the error.

## 3. Boltzmann constant

The Boltzmann constant plays an important role in statistical mechanics. It connects the energy $E$ and the temperature $T$ of particles. The equation

$$p = \frac{1}{Z} \exp\left(-\frac{E}{k_B T}\right), \tag{2}$$

where $Z$ is a scaling factor known as the partition function, describes a thermal equilibrium. The Boltzmann constant is an exact value defined as $k_{B,\text{Lit.}} = 1.380649 \cdot 10^{-23} \frac{\text{J}}{\text{K}}$ [2]. The Boltzmann statistic does not correctly describe electrons in a solid. Because, according to the Boltzmann statistic a state can be occupied by any number of particles. However electrons are fermions and as such the Pauli principle has to be applied, which states that every state can only be occupied by one fermion with the same spin.

Therefor the Fermi-Dirac statistic is based on the Pauli principle. The Fermi particles behave according to the Fermi-Dirac distribution

$$f(E) = \frac{1}{\exp\left(\frac{E_F - E}{k_B T}\right) + 1}. \tag{3}$$

$E_F$ denotes the Fermi energy at which all ground states are occupied. For $E - E_F \ll k_B T$ the relation can be approximated as

$$f(E) \approx \exp\left(\frac{E_F - E}{k_B T}\right). \tag{4}$$

Due to the different doping of the metal, there exists a neutral region at the p-n junction. There are no free charge carriers (e.g. electrons) in this neutral zone. The negative and positive doped areas create an anti-diffusion-voltage $U_a$, which prevents electrons to flow from the n-space to the p-space.

Nevertheless, the thermal energy of the particles conducts an intrinsic current $I_0$. The counter current to this is the diffusion current $I_D$.

According to the approximation in equation 4 the particles follow the Boltzmann distribution. Therefore the diffusion current can be defined as

$$\begin{aligned} I_D(U_a) &= \text{const.} \cdot \int_{eU_a}^{\infty} N(E) dE \\ &= \text{const.} \cdot e\, k_B T \exp\left(-\frac{eU_a}{k_B T}\right). \end{aligned} \tag{5}$$

Without an outer voltage the balance between $I_0$ and the diffusion current at a p-n juncture needs to be in at equilibrium. This leads to the relationship

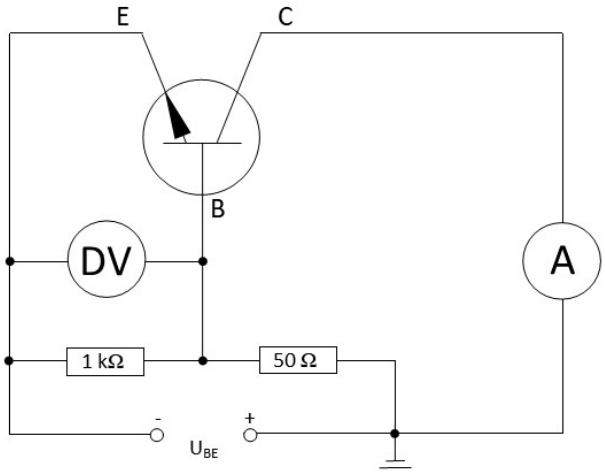


**Fig. 4:** The figure shows the construction to measure the Boltzmann constant. While applying different voltages $U_{BE}$ the diffusion current was measured as the collector current $I_c$.

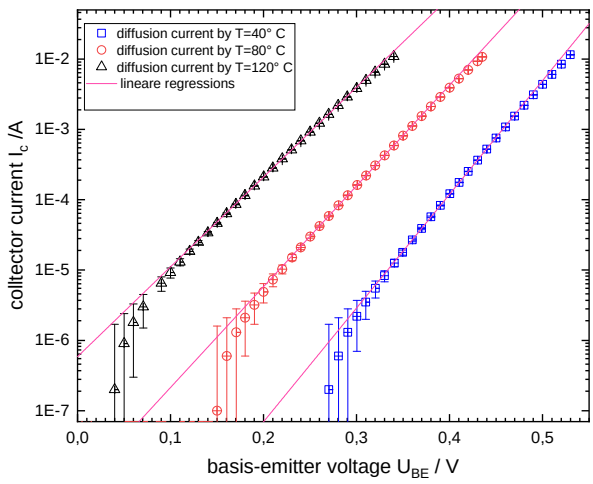


**Fig. 5:** Logarithmic plot of the diffusion current to the basis-emitter voltage for different temperatures. The linear regressions represents the function of $|I_0| \exp(m\ U_{BE})$. The gradient can be seen in table 1.

$I_D(U=0) = |I_0|$. If the outer voltage $U_{BE}$ is applied the particles need to overpower another potential difference $E > e(U_a - U_{BE})$.

Furthermore, the diffusion current is now

$$\begin{aligned} I_D(U_{BE}) &= \text{const.} \cdot e\ k_B T \exp\left(-\frac{e(U_a - U_{BE})}{k_B T}\right) \\ &= \underbrace{\text{const.} \cdot e\ k_B T \exp\left(-\frac{eU_a}{k_B T}\right)}_{=|I_0|} \exp\left(\frac{eU_{BE}}{k_B T}\right) \\ &= |I_0| \exp\left(\frac{eU_{BE}}{k_B T}\right). \end{aligned} \tag{6}$$

By taking the logarithm of this equation, the mentioned correlation develops to

$$\ln(I_D(U_{BE})) = \ln(|I_0|) + \frac{e\ U_{BE}}{k_B\ T} \tag{7}$$

With only a p-n juncture one can't measure the diffusion current accurately due to many interference currents. Therefore, a npn transistor was used, the construction can be seen in figure 4. With an applied voltage between the emitter and the basis the diffusion current $I_D$ is measured. The diffusion current is also called collector current. The interference currents flow only between the base and emitter, resulting in a largely undisturbed diffusion current between the base and collector.

An "Agilent Multimeter 34405A" was used to measure the current and the voltage, a "Kältethermostat RE104" to keep the temperature stable. The measurements are plotted in figure 5. The current is plotted logarithmic against the applied voltage. The inaccuracy is calculated according to the manufacturer's instructions. While evaluating the measurements two systematic errors can be detected.

| T (±0.4) /K | m / $\frac{As}{J}$ | $k_B$ / $10^{-23} \cdot \frac{J}{K}$ |
|---|---|---|
| 313.15 | $(37.242 \pm 0.093)$ | $(1.3738 \pm 0.0039)$ |
| 353.15 | $(33.004 \pm 0.049)$ | $(1.3746 \pm 0.0026)$ |
| 393.15 | $(29.41 \pm 0.12)$ | $(1.3855 \pm 0.0059)$ |

**Table 1:** The gradient m and the $k_b$-factor for the different temperatures. All inaccuracies are computed with Gaussian error calculation.

1. Small currents have the tendency to be below the expected value. The reason for this deviation is the n-p juncture, which affects the diffusion current.

2. At a certain current the transistor has reached its saturation state. As a result, the I(U)-dependency isn't exponential anymore.

To compute the gradient $m$ only the linear part of the I(U)-dependency is taken in account, this can be seen in figures 11, 12 and 13. From equation 7 the gradient $m$ is defined as

$$m = \frac{\ln(I_D(U_{BE}))}{U_{BE}} = \frac{e}{k_B T}. \tag{8}$$

The gradient and the experimental values of the computed $k_B$ are listed in table 1. Table 1 shows that only the value received at a temperature of $T = (393.15 \pm 0.4)$ K for $k_B$ is compatible with the literature value within its error. The other values deviate slightly downward from the exact value for $k_B$. In addition, unnoticed ohmic resistances may have falsified the data. For example, due to solder joints or additional cables. However, these resistances are not taken into account in the model and can only be measured

poorly. Since the temperature influence on these resistors is only linear in contrast to the exponential growth of the semiconductor, the relative deviation becomes smaller at higher temperatures, so that the measurement is less distorted at high temperatures. The average value of the calculated $k_B$ is

$$k_B = (1.3780 \pm 0.0025) \cdot 10^{-23} \ \frac{\mathrm{J}}{\mathrm{K}}.$$

This value does not match its literature value within the $\sigma-$band. However, the deviation is so minimal that, taking into account the previously discussed deviations, a match can be assumed.

# 4. Summary

The values for the Planck and the Boltzmann constant were determined. The photoelectric effect was used to measure the energy of the photoelectrons at different light frequencies. From this the Planck constant was received to be $h = (6.42 \pm 0.22) \cdot 10^{-34}$ Js. This value matches the exact value within the margin of error.

The Boltzmann constant was obtained by measuring the diffusion current at a pn-transition inside of a npn-transistor. As in thermal equilibrium this current follows a Boltzmann factor. Therefore the data could be interpolated and the constant calculated from the fit parameters to $k_B = (1.3780 \pm 0.0025) \cdot 10^{-23} \ \frac{\mathrm{J}}{\mathrm{K}}$. This value differs slightly from the literature value and does not match it within its $\sigma-$band.

# References


[1] Praktikumsanleitung, Versuch C45 Plancksches Wirkungsquantum und Boltzmann-Konstante, last visited $12^{th}$ January 2022

[2] National Institute of standards and technology, constants, units and uncertainty, last visited January 16, 2022: https://physics.nist.gov/cgi-bin/cuu/Value?k

[3] Meschede, Dieter, Gerthsen Physik, 25 edition, Berlin, Heidelberg 2015

[4] National Institute of standards and technology, constants, units and uncertainty, last visited January 17, 2022: https://physics.nist.gov/cgi-bin/cuu/Value?e

[5] CODATA recommended values of the fundamental physical constants: 2018, Tiesinga et al.,Reviews of modern physics, Volume 93, 2021

[6] The measurement of Planck's constant using the visible photoelectric effect, Keesing (York), European Journal of Physics 2, 1981


# A. Appendix

## A.1. Determination of the Planck constant

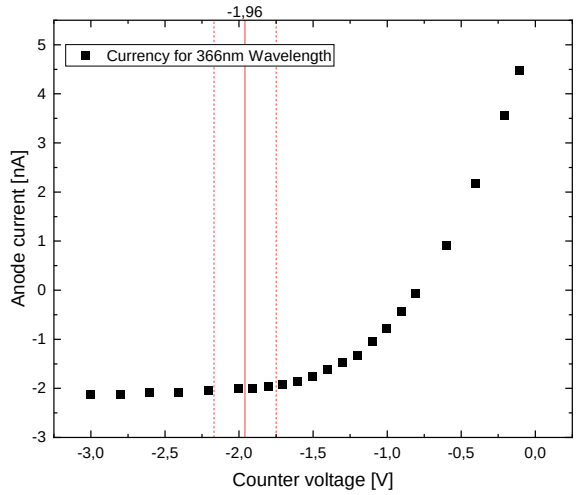


**Fig. 6:** With 366nm wavelength the anode current as a function of the counter voltage is almost constant up to $U_T = (1.96 \pm 0.21)\,\mathrm{V}$. After that it appears exponential.

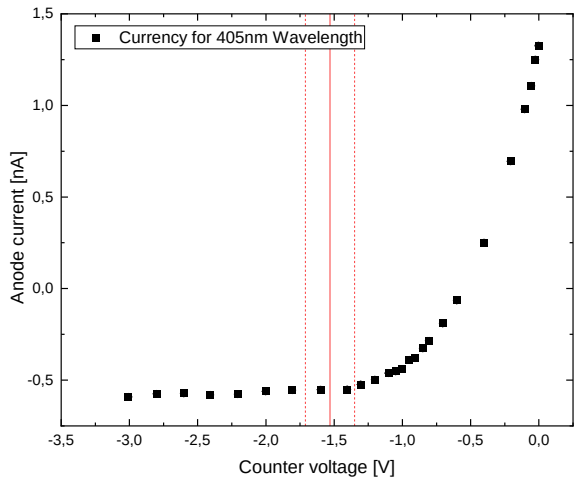


**Fig. 7:** With 405nm wavelength the anode current as a function of the counter voltage is almost constant up to $U_T = (1.53 \pm 0.18)\,\mathrm{V}$. After that it appears exponential.

| f /[$10^{14}$/s] | Threshold voltage /[V] |
|---|---|
| 5.187 | $(0.702 \pm 0.080)$ |
| 5.491 | $(0.850 \pm 0.069)$ |
| 6.876 | $(1.37 \pm 0.16)$ |
| 7.402 | $(1.47 \pm 0.16)$ |
| 8.191 | $(1.96 \pm 0.21)$ |

**Table 2:** The threshold voltage of the photo diode for different frequencies of the radiation.

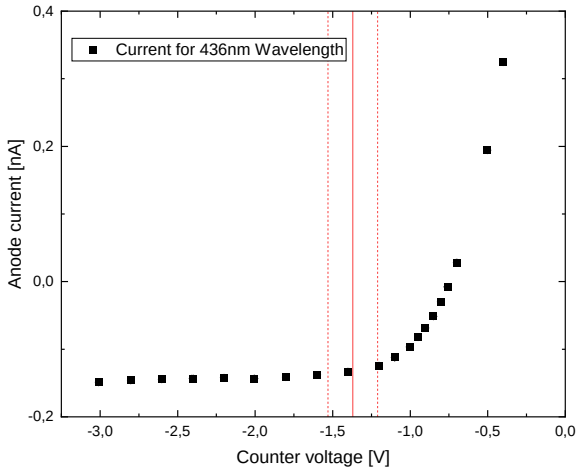


**Fig. 8:** With 436nm wavelength the anode current as a function of the counter voltage is almost constant up to $U_T = (1.37 \pm 0.16)\,\mathrm{V}$. After that it appears exponential.

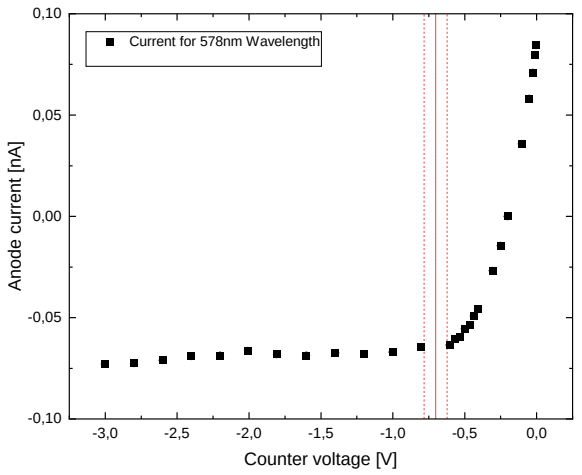


**Fig. 9:** With 578nm wavelength the anode current as a function of the counter voltage is almost constant up to $U_T = (0.702 \pm 0.08)\,\mathrm{V}$. After that it appears exponential.

## A.2. Determination of the diffusion current

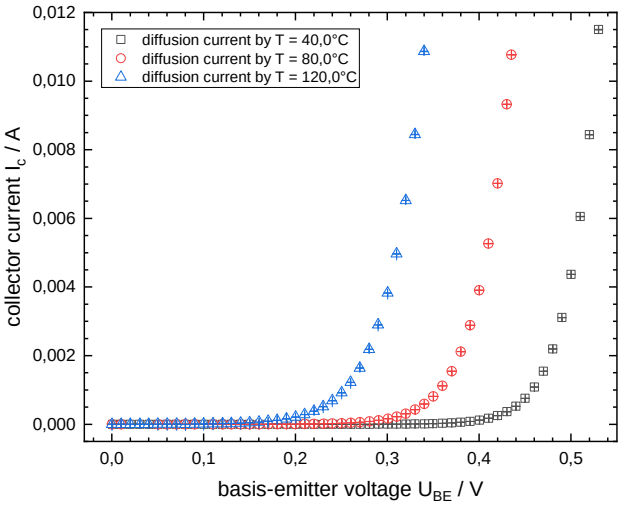


**Fig. 10:** The measured collector current to the basis-emitter voltage. The inaccuray is computed according to the instruction manual of the devices.

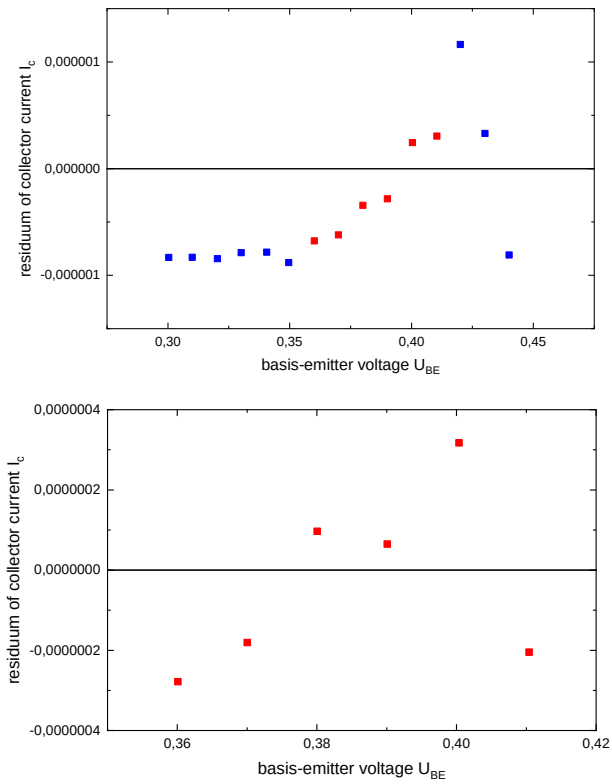


**Fig. 11:** Residual plots for logarithmized function evaluated with linear regression for $T = 40°$ C. Top: Fitting of data after exclusion of obvious deviations to linear regression. Data points highlighted in blue do not follow a linear progression. Bottom: Evaluation of the linear correlation.

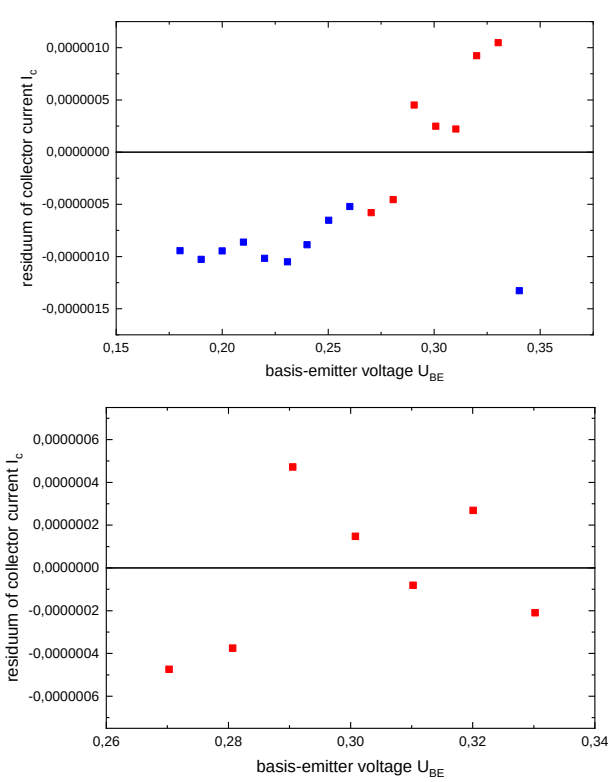


**Fig. 12:** Residual plots for logarithmized function evaluated with linear regression for $T = 80°$ C. Top: Fitting of data after exclusion of obvious deviations to linear regression. Data points highlighted in blue do not follow a linear progression. Bottom: Evaluation of the linear correlation.

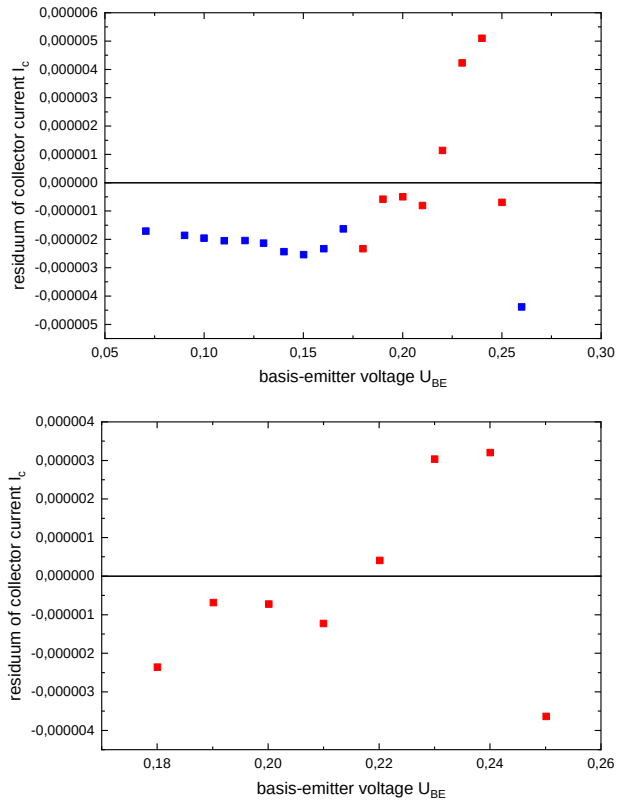


**Fig. 13:** Residual plots for logarithmized function evaluated with linear regression for $T = 120°$ C. Top: Fitting of data after exclusion of obvious deviations to linear regression. Data points highlighted in blue do not follow a linear progression. Bottom: Evaluation of the linear correlation.