Thermal radiation of Leslie's cube and a black body

Nele Wurster Hannes Winkler

this abstract is indeed abstract

Executed: 22. April 2026
Submitted: ——-

1 Introduction

2 Theory

In the following sections we will examine the emission of different surfaces and of a cavity radiator. A reasonable theoretical starting point is the black body radiator. Its spectral density of electromagnetic radiation is given by Planck's law:

$$I(\nu, T) = \frac{2h\nu^3}{c^2} \cdot \frac{1}{e^{\frac{h\nu}{kT}} - 1} \tag{1}$$

Here the T is the temerature of the black body, ν is the frequency of the emitted radiation, h is Planck's constant, c is the speed of light and k is Boltzmann's constant. The total power emitted by a black body per unit area can be calculated by integrating over all frequencies and the solid angle:

$$\frac{P}{A} = \int_0^\infty I(\nu, T) d\nu \int cos(\theta) d\Omega \tag{2}$$

The cosine is there because the black body is also a Lambertian emitter, meaning that the intensity of the emitted radiation is proportional to the cosine of the angle between the normal of the surface and the direction of emission. Computing the integral yields the Stefan-Boltzmann law:

$$P = \sigma A T^4 \tag{3}$$

Where σ is the Stefan-Boltzmann constant:

$$\sigma = \frac{2\pi^5 k^4}{15 h^3 c^2} \approx 5.67 \cdot 10^{-8} \frac{W}{m^2 K^4} \tag{4}$$

Since the black body is an idealized object, Eq. 3 is not valid for real objects. Instead, we have to introduce the specific emissivity ϵ of the object, which is smaller than 1 for real objects and equals 1 for a perfect black body. The modified Stefan-Boltzmann law for real objects is then:

$$P = \epsilon \sigma A T^4 \tag{5}$$

For the following measurments it is important to note, that the Leslie's cube also absorbs radiation from the environment and re-emits it with respect to the Kirchhoff's law. Kirchhoff's law states that the emissivity ϵ of a surface is equal to its absorptivity α. Therefore the radiation generated only by the temperature of the cube is the difference between the emitted radiation and the absorbed radiation. T_0 is the temperature of the environment, which we will assume to be room temperature. It follows:

$$P \propto T^4 - T_0^4 \tag{6}$$

3 Experiment

3.1 Measurements on Leslie's cube

For the following measurements the setup shown in figure 1 was used. This consists of a Leslie's cube on a turntable which is heated by a thermostat. The cube has four different surfaces: a white, a black, a shiny nickel-plated and a matte nickel-plated. A thermopile is used to measure the thermal radiation emitted by the different surfaces of the cube. The thermopile is connected to a voltmeter which displays the voltage generated by the thermopile. The filtermount can be used to place different filters in front of the thermopile, which will be done in section 3.1.2. The errors of the temperature and the voltage are calculated according to the specifications of the thermostat Lauda Kältethermostate RE 104 and the voltmeter Agilent 34405A ([1], [2]).

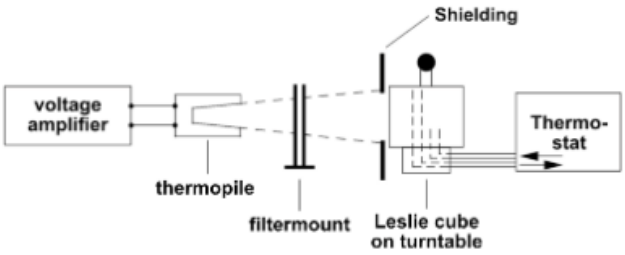

Abb. 1: Experimental setup for measurements on Leslie's cube.

3.1.1 Stefan-Boltzmann-law

Figure 2 shows the voltage generated by the thermopile as a function of the temperature of the cube for the different surfaces. The fit used is of the form $U = A(T^b - T_0^b)$, where $T_0 = 293.15K$ is the reference temperature measured via the zero point of the voltmeter. The fit parameters are shown in table **??**.

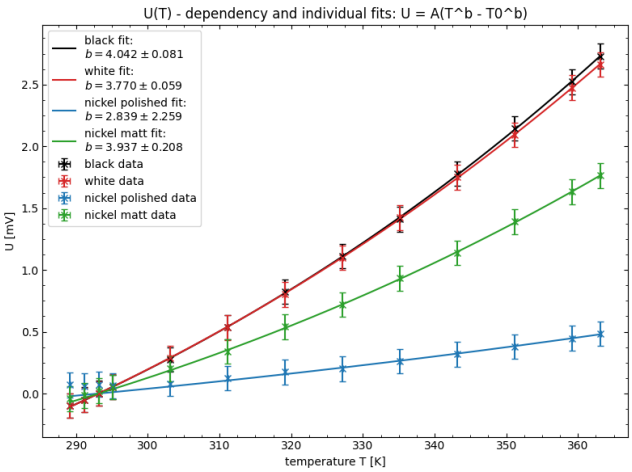

Abb. 2: Voltage generated by the thermopile as a function of the temperature of the cube for the different surfaces. The fit used is of the form $U = A(T^b - T_0^b)$. With $T_0 = 293.15K$ as the reference temperature.

As one can see in figure 2 the black side emits the most thermal radiation and the polished nickel-plated side emits the least, which is expected since the black surface has the highest emissivity and the polished nickel-plated surface has the lowest emissivity. The data of the polished nickel-plated surface is very noisy. This matches with it's fit exponent b which is far off aswell, this will be discussed further below in more detail.

Surface	fit exponent b
White	3.770 ± 0.059
Black	4.043 ± 0.081
Polished nickel-plated	2.8 ± 2.3
Matte nickel-plated	3.94 ± 0.21

Tabelle 1: The exponents determined by the $U = A(T^b - T_0^b)$ fit to the data obtained by measurements on Leslie's cube.

The expected values of the exponents is $b = 4$ according to the Stefan-Boltzmann law. The values obtained for the black and matte nickel-plated surfaces match that within their error, while the value obtained for the white and polished nickel-plated surface are a bit off. The value obtained for the white surface is close to the expected value, but the error is small enough to exclude $b = 4$. The value obtained for the polished nickel-plated does match $b = 4$ within the error, but the error is very large which is a good representation of the poor quality of the measurement. This poor quality is due to the fact that the polished side reflects a lot of thermal radiation from the environment, which is also measured by the thermopile and can not be easily seperated from the radiation emitted by the surface itself. A solution to this would be to place the setup in a more contained environment and shield it further from external radiation.

3.1.2 Infrared permeability for several materials

In this part of the experiment the setup in figure 1 was reused, but only the black side of the cube was used, now with different optical filters placed in front of the thermopile. The used filters were: window glass, silicon and sodium chloride.
The temperature was set to $T = 77°\mathrm{C}$ with an environmental temperature of $T_0 = 20°\mathrm{C}$. The thermal radiation emitted by the black surface was measured first, after that the filters were placed in front of the thermopile and the measurements were repeated. The results are given in percentages of the voltage measured without a filter and shown in table 2.

Filter	infrared permeability (%)
Window glass	2.27 ± 0.48
Silicon	46.82 ± 0.48
Sodium chloride	73.32 ± 0.48

Tabelle 2: Transmittance of infrared radiation through different filters at $T = 77°\mathrm{C}$.

It shows that thus although the window glass transmits visible light very well, the infrared transmittance is the lowest of the three. Since glass is an amorphous material, it has a lot of vibrational

modes which can be excited by the infrared radiation, which leads to a high absorption and thus low transmittance. Silicone however lets almost half of the infrared radiation through, which is due to the fact that it is a crystalline material with covalent bonds and to be more precise, it is a indirect band gap semiconductor. This means that it has a band gap which can be excited by the infrared radiation, but for cristal-momentum conservation, a phonon also needs to be involved, which is less likely to happen than just exciting the band gap, which leads to a higher transmittance than glass but not as high as sodium chloride. Sodium chloride has the highest transmittance of the three, which can be referred to the fact that it is an ionic crystal with a large band gap, which can not be excited by the infrared radiation, leading to a very low absorption and thus high transmittance.

With Wien's displacement law one can also calculate the wavelength of the maximum spectral intensity of the thermal radiation:

$$\lambda_{max} = \frac{b}{T} \tag{7}$$

where $b = 2897.771955 \mu m * K$ is Wien's displacement constant and T is the temperature of the black surface in Kelvin. For the measured room temperature of $T_0 = 20°\text{C}$ and the temperature of the black surface of $T = 77°\text{C}$, one obtains a wavelength of $\lambda_{max,0} = 9.885 \pm 0.033 \mu m$ and $\lambda_{max,leslie} = 8.276 \pm 0.020 \mu m$ respectively. Both are in the infrared range, which is consistent with the fact that the filters used in this part of the experiment are designed to filter infrared radiation.

3.2 Blackbody radiation

The setup of the following part is seen in figure 3. It of an electric oven in which a hollow cylinder is heated. Through a hole in the cavity the thermal radiation is emitted. This is a close approximation of a blackbody, since a black body isn't possible in reality.

3.2.1 Stefan-Boltzmann-law

Analogously to 3.1, the voltage generated by the thermopile is measured in an temperature range of Room temperature $= 20°\text{C} \leq T \leq 400°\text{C}$. The angle at which the thermopile is placed is chosen to be $\phi = 0°$, so it is directly facing the hole of the hollow cylinder. The data is again first fitted with the function $U = A(T^b - T_0^b)$, where T_0 is the room temperature. The fit is shown in figure **??** and the fit parameter b is shown in table **??**.

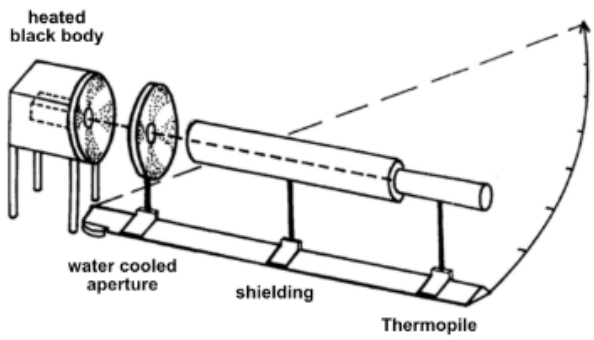

Abb. 3: Experimental setup for measurements on blackbody radiation.

4 Evaluation

5 Conclusion

Literatur

[1] `https://www.physik.uni-wuerzburg.de/fileadmin/11000000/03_Studium/02_Bachelor/Grundpraktikum/_imported/fileadmin/11016800/Geraete/RE104.pdf` last visited on 24.04.2026

[2] `https://www.physik.uni-wuerzburg.de/fileadmin/11000000/03_Studium/02_Bachelor/Grundpraktikum/_imported/fileadmin/11016800/Geraete/Agilent-34405a.pdf` last visited on 24.04.2025

[3] `https://physics.nist.gov/cgi-bin/cuu/Value?r` Zuletzt besucht 10.01.2026

[4] `https://www.chemeo.com/cid/68-061-9/Sulfur-hexafluoride` zuletzt besucht am 10.01.2026

[5] H. J. Eichler, H. Kronfeld, J. Sahm: Das neue physikalische Praktikum, 3. Auflage, Springer Spektrum, 2016, Tabelle 17.3

[6] JMU Würzburg, Fakultät für Physik und Astronomie: Praktikumsanleitung zum Versuch C31 `https://www.physik.uni-wuerzburg.de/fileadmin/11000000/03_Studium/02_Bachelor/Grundpraktikum/_imported/fileadmin/11016800/Modulbeschreibungen/C-Modul/31.pdf`