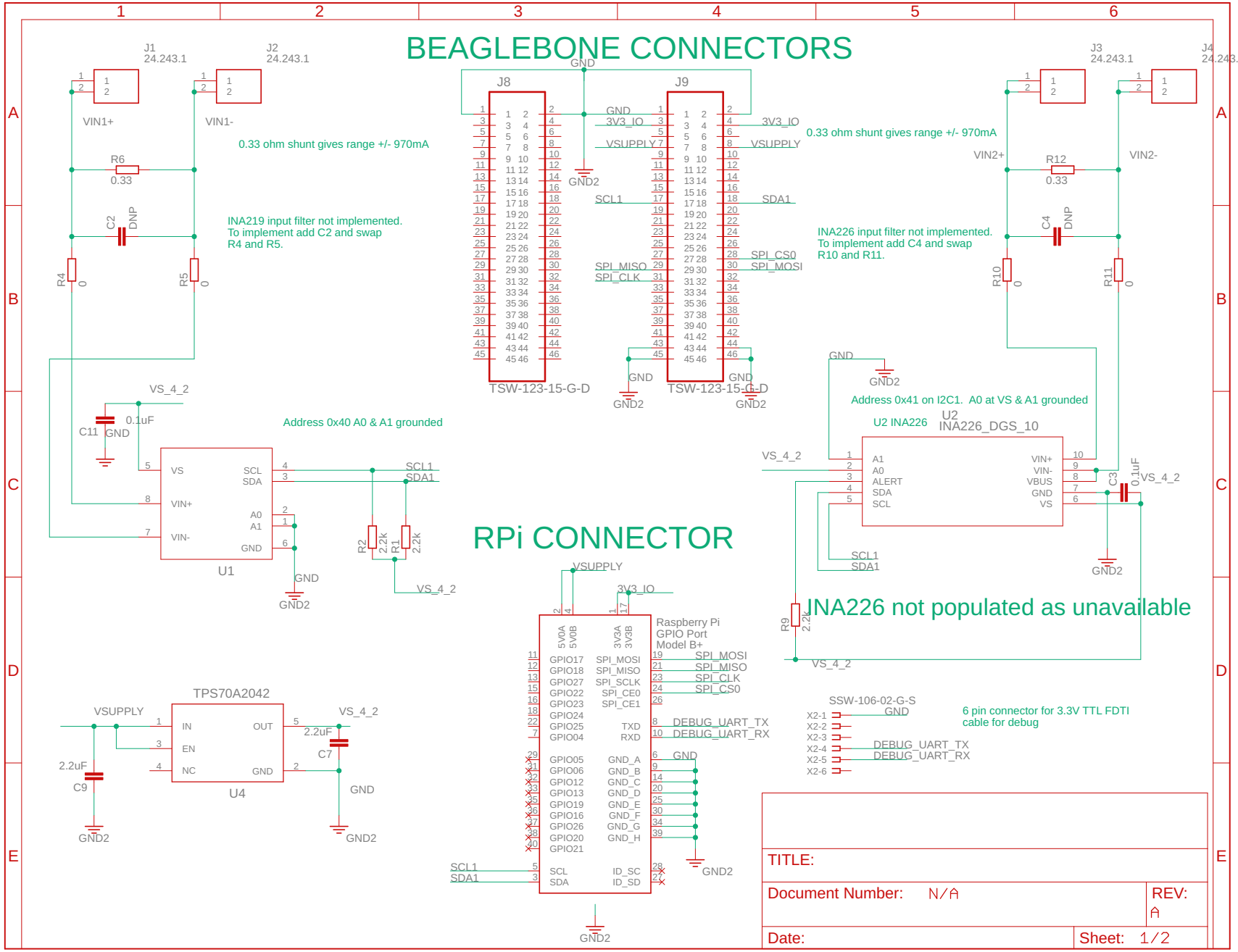
BEAGLEBONE CONNECTORS
J1 24.243.1
J2 24.243.1
VIN1+
VIN1-
R6 0.33
0.33 ohm shunt gives range +/- 970mA
C2 DNP
INA219 input filter not implemented.
To implement add C2 and swap
R4 and R5.
R4 0
R5 0
VS_4_2
C11 0.1uF
GND
Address 0x40 A0 & A1 grounded
VS
VIN+
VIN-
SCL
SDA
A0
A1
GND
U1
SCL1
SDA1
R2 2.2k
R1 2.2k
GND2
J8
J9
TSW-123-15-G-D
TSW-123-15-G-D
3V3_IO
VSUPPLY
SPI_CS0
SPI_MOSI
SPI_MISO
SPI_CLK
J3 24.243.1
J4 24.243.1
VIN2+
VIN2-
R12 0.33
0.33 ohm shunt gives range +/- 970mA
C4 DNP
INA226 input filter not implemented.
To implement add C4 and swap
R10 and R11.
R10 0
R11 0
Address 0x41 on I2C1. A0 at VS & A1 grounded
U2 INA226
U2
INA226_DGS_10
A1
A0
ALERT
SDA
SCL
VIN+
VIN-
VBUS
GND
VS
C3 0.1uF
R9 2.2k
INA226 not populated as unavailable
RPi CONNECTOR
Raspberry Pi
GPIO Port
Model B+
5V0A
5V0B
3V3A
3V3B
GPIO17
GPIO18
GPIO27
GPIO22
GPIO23
GPIO24
GPIO25
GPIO04
GPIO05
GPIO06
GPIO12
GPIO13
GPIO19
GPIO16
GPIO26
GPIO20
GPIO21
SPI_MOSI
SPI_MISO
SPI_SCLK
SPI_CE0
SPI_CE1
TXD
RXD
GND_A
GND_B
GND_C
GND_D
GND_E
GND_F
GND_G
GND_H
SCL
SDA
ID_SC
ID_SD
DEBUG_UART_TX
DEBUG_UART_RX
TPS70A2042
IN
EN
NC
OUT
GND
U4
2.2uF
C9
C7
SSW-106-02-G-S
X2-1
X2-2
X2-3
X2-4
X2-5
X2-6
6 pin connector for 3.3V TTL FDTI
cable for debug
TITLE:
Document Number: N/A
REV: A
Date:
Sheet: 1/2

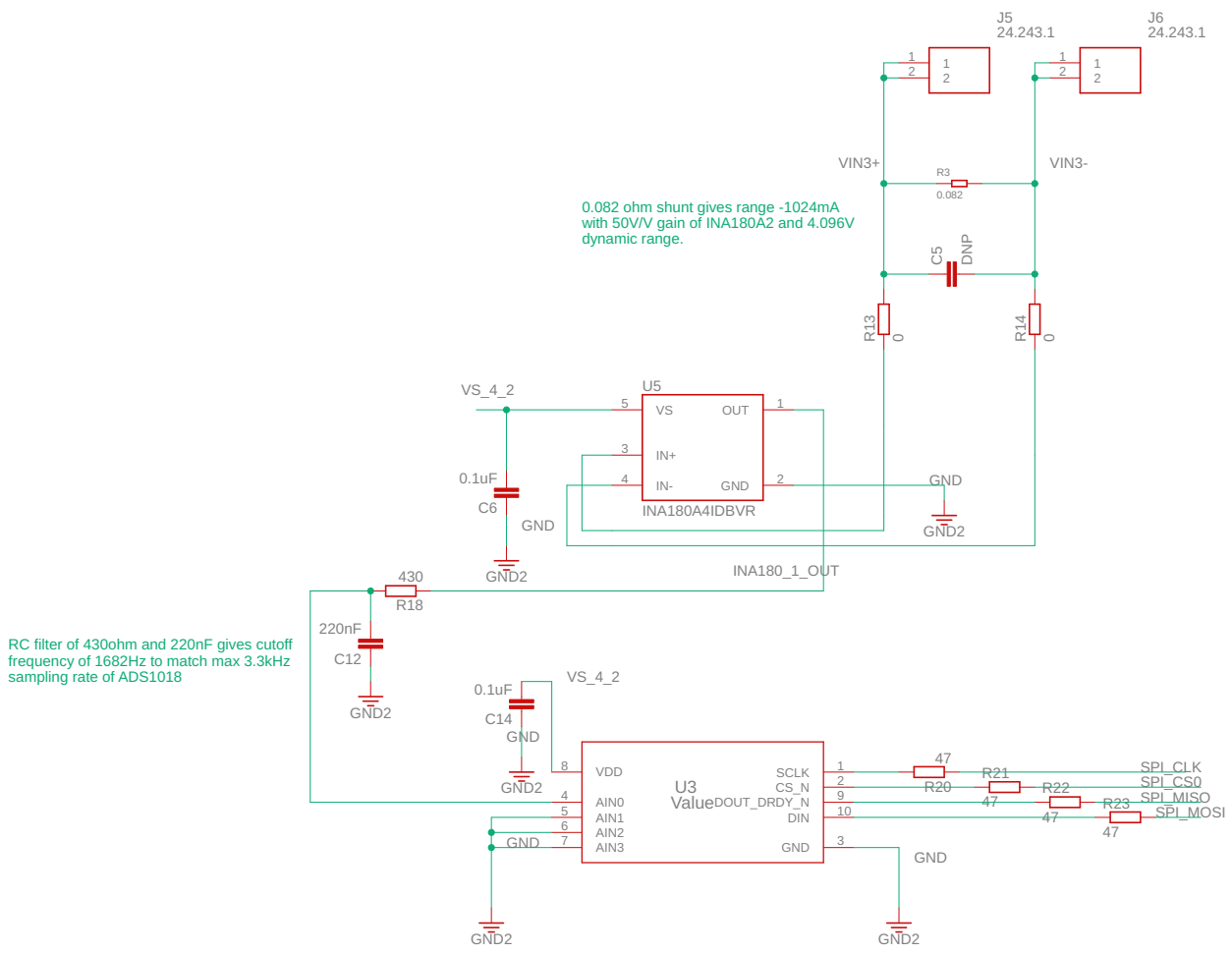

TITLE:

Document Number:

REV:

Date:

Sheet: 2/2