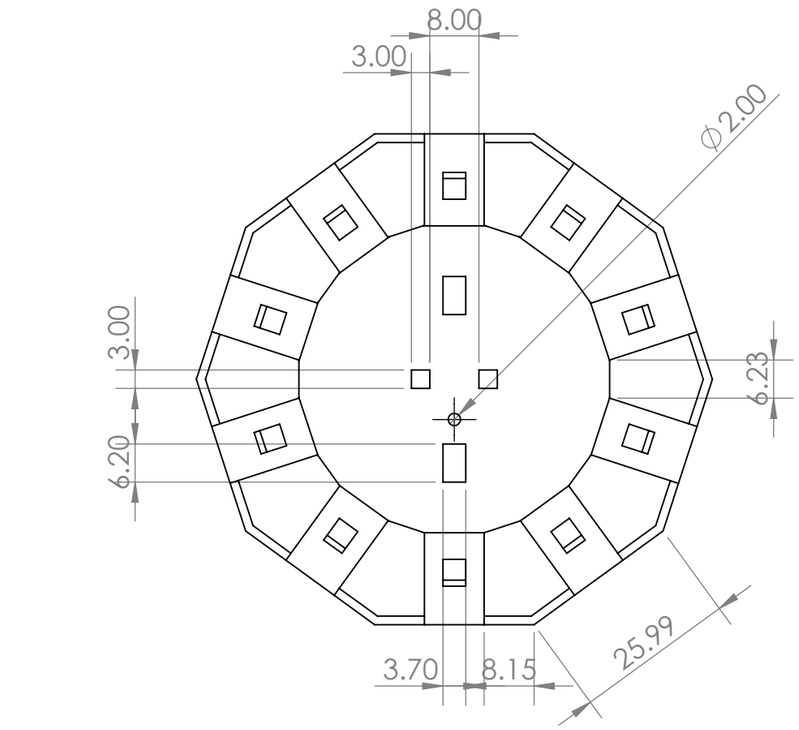

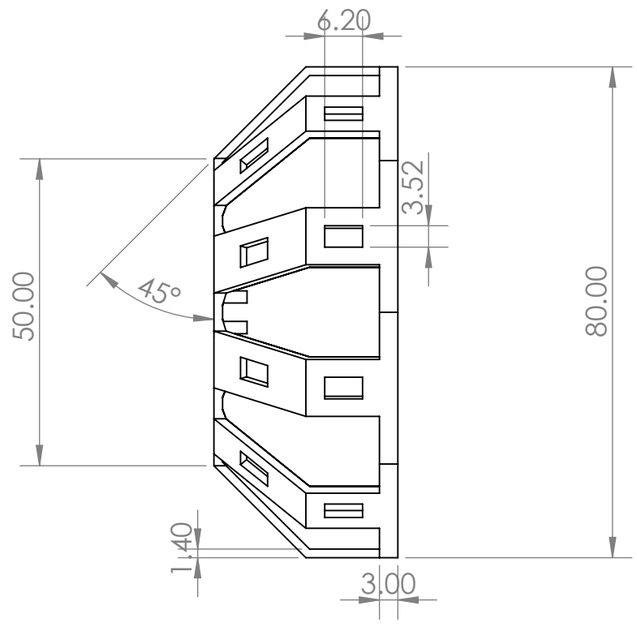

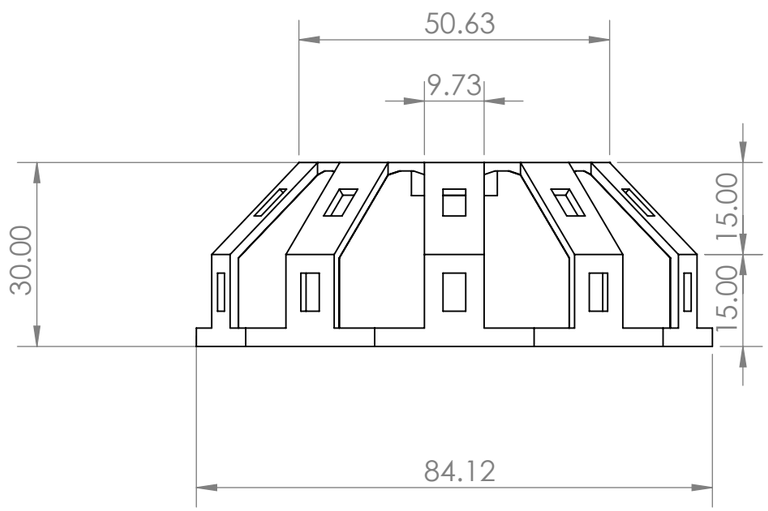

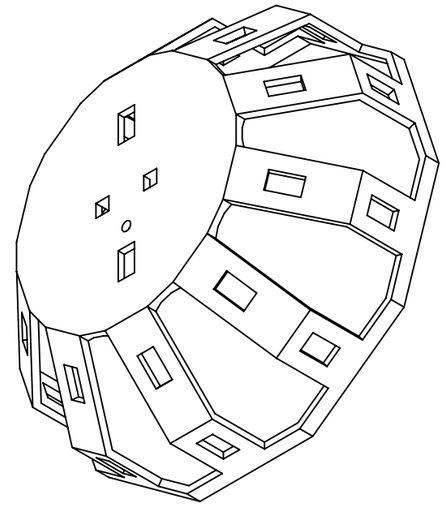

	NAME	SIGNATURE	DATE
DRAWN	Huntington Jaspersor		8/16/2020

TITLE:

Deca_Flower_rev3

MATERIAL: PLA

DWG NO. A3

WEIGHT:

SCALE:1:1

SHEET 1 OF 1

SOLIDWORKS Educational Product. For Instructional Use Only.