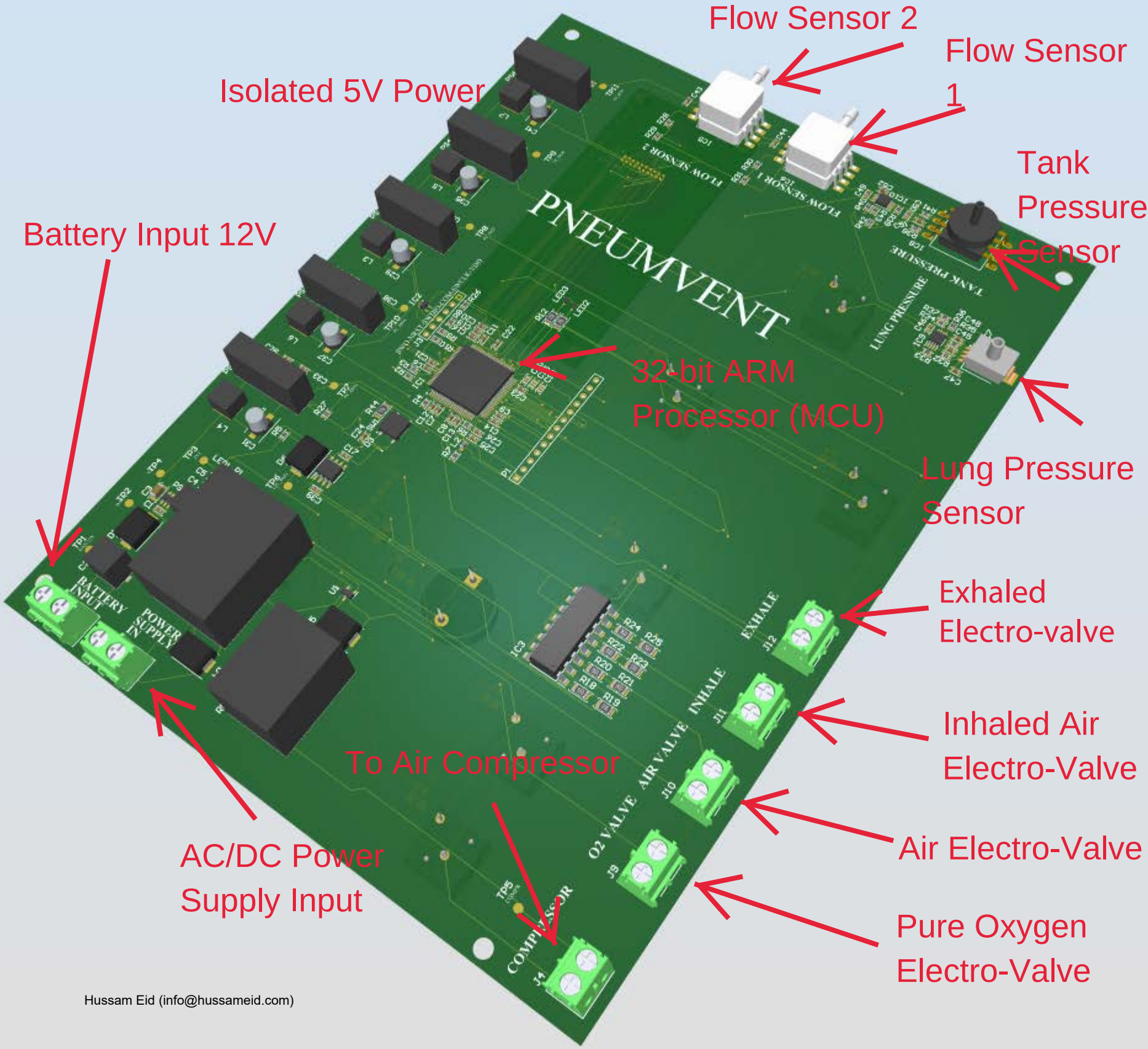

Hussam Eid (info@hussameid.com)

TOP-SIDE-VIEW

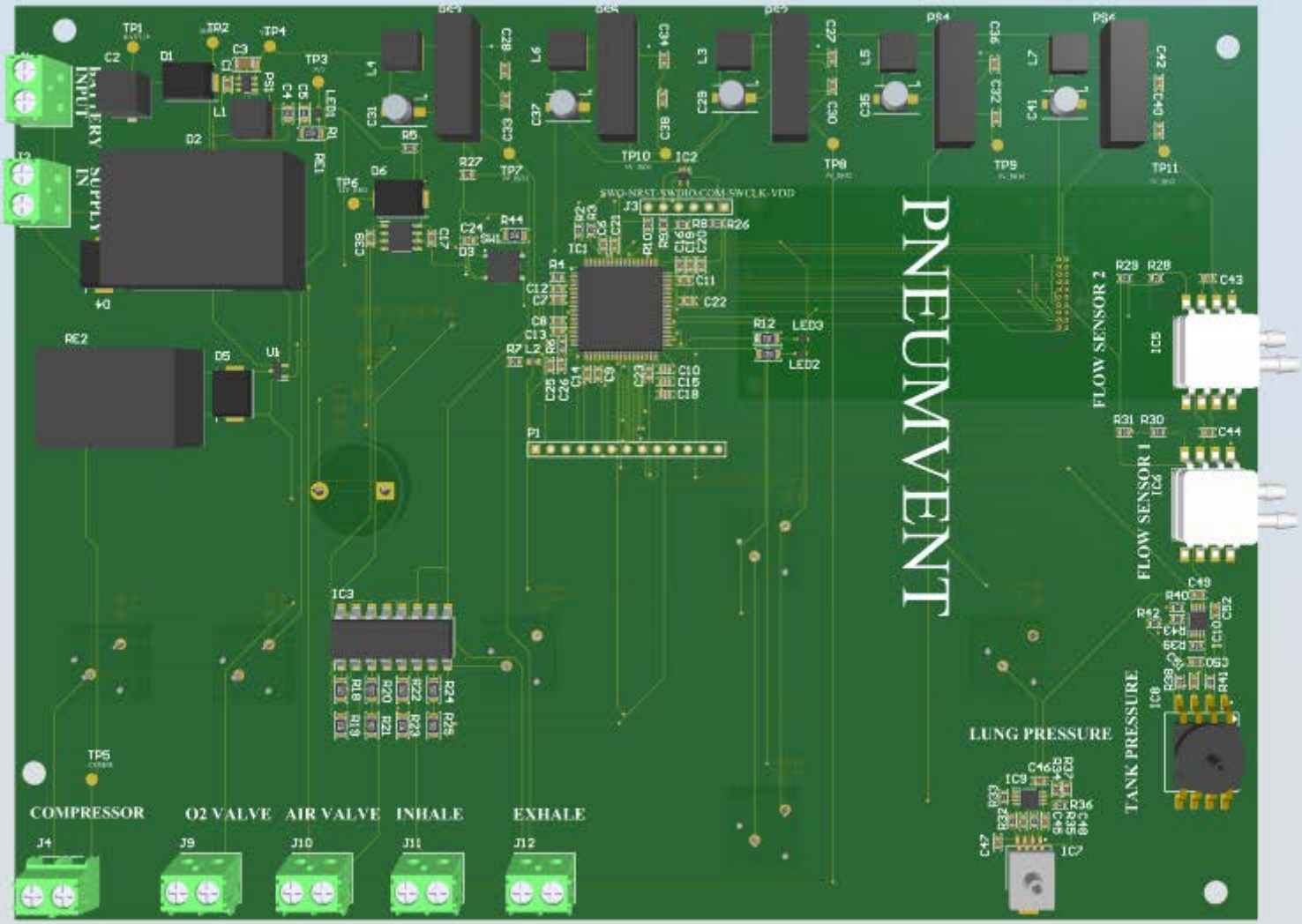

Hussam Eid (info@hussameid.com)

BOTTOM-SIDE-VIEW

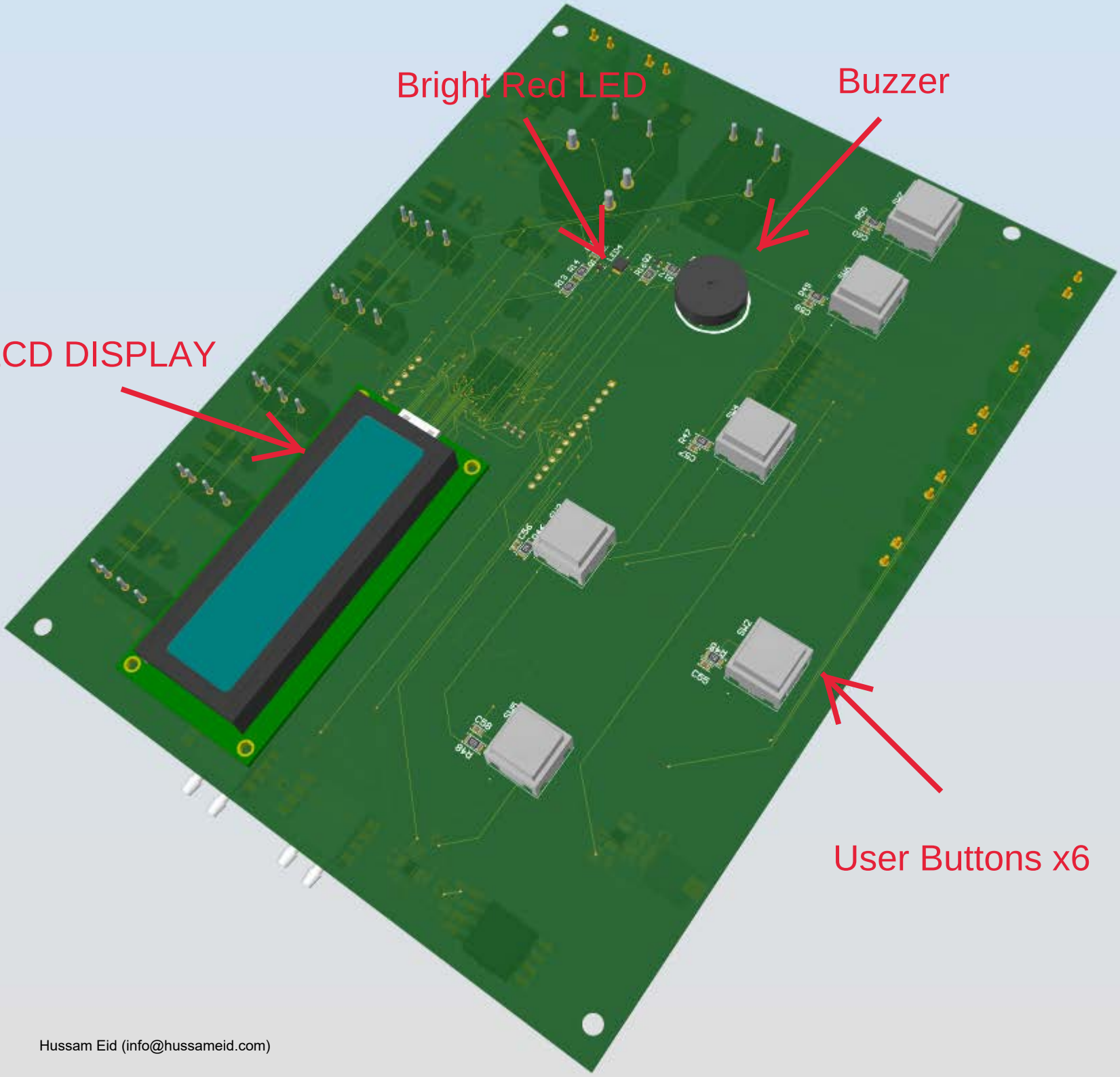

Hussam Eid (info@hussameid.com)

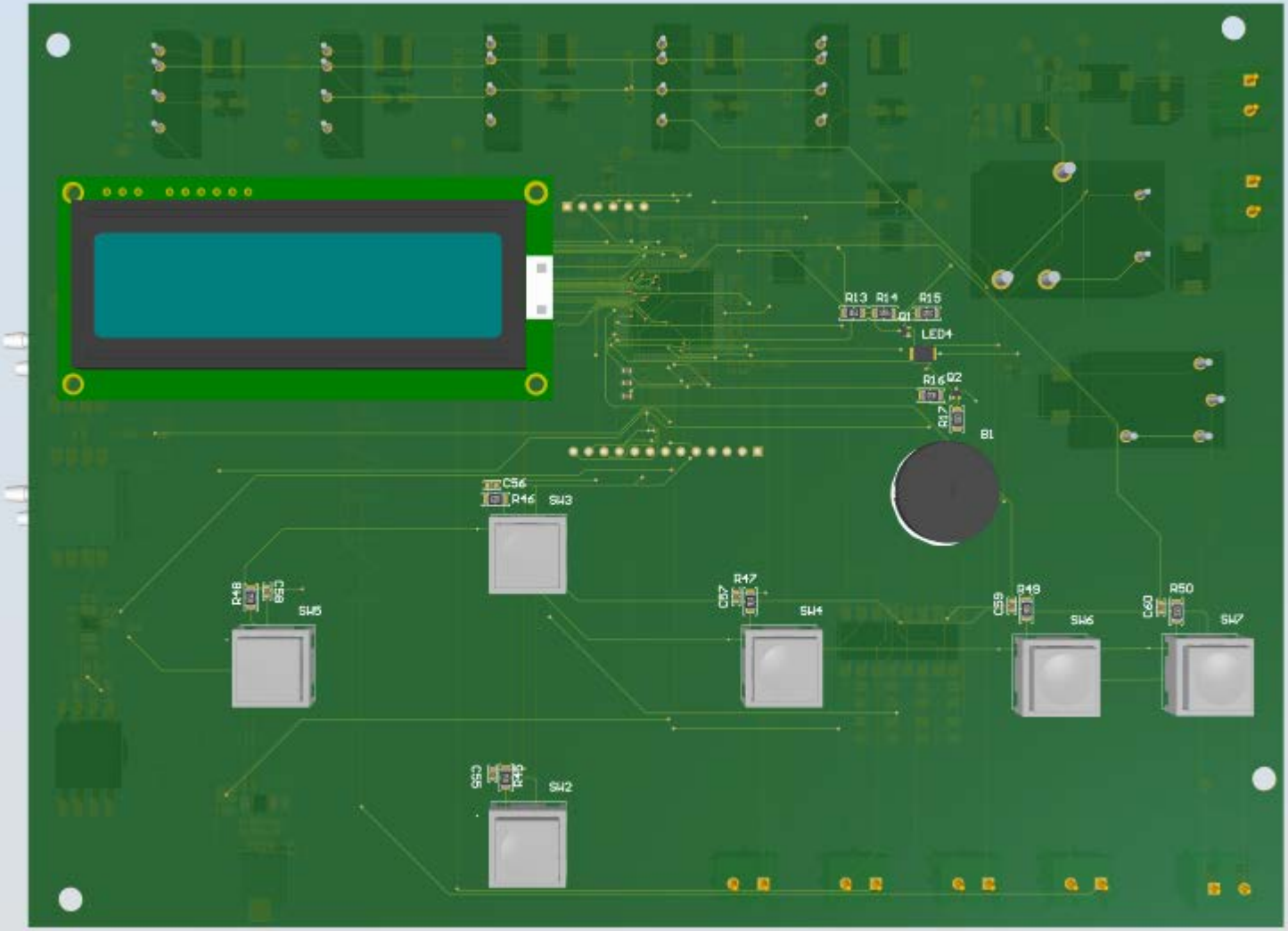

Hussam Eid (info@hussameid.com)