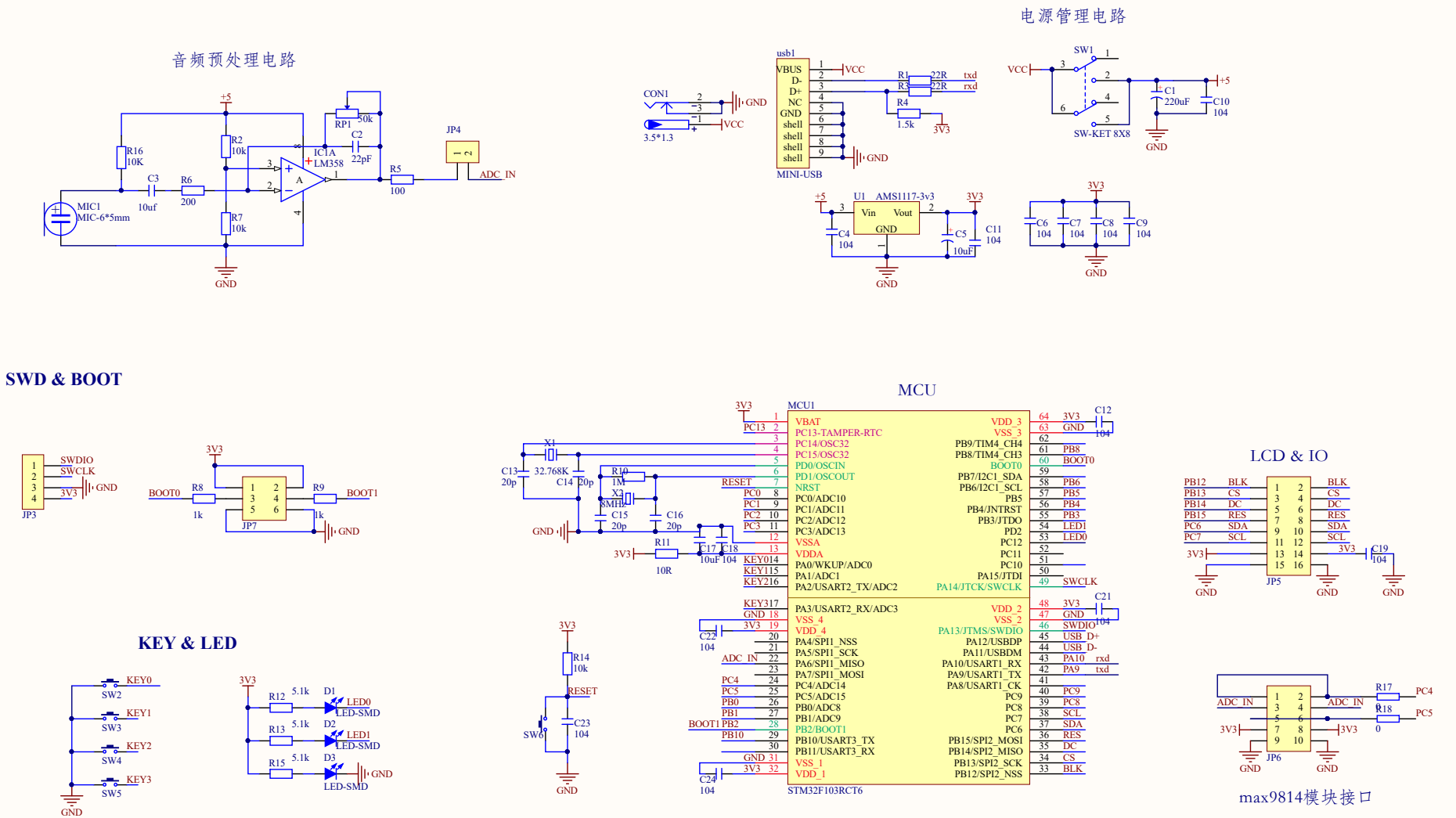

Title		
Size A3	Number	Revision
Date: 2024/6/18		Sheet of
File: G:\1TAOBAO\..\Sheet1.SchDoc		Drawn By: