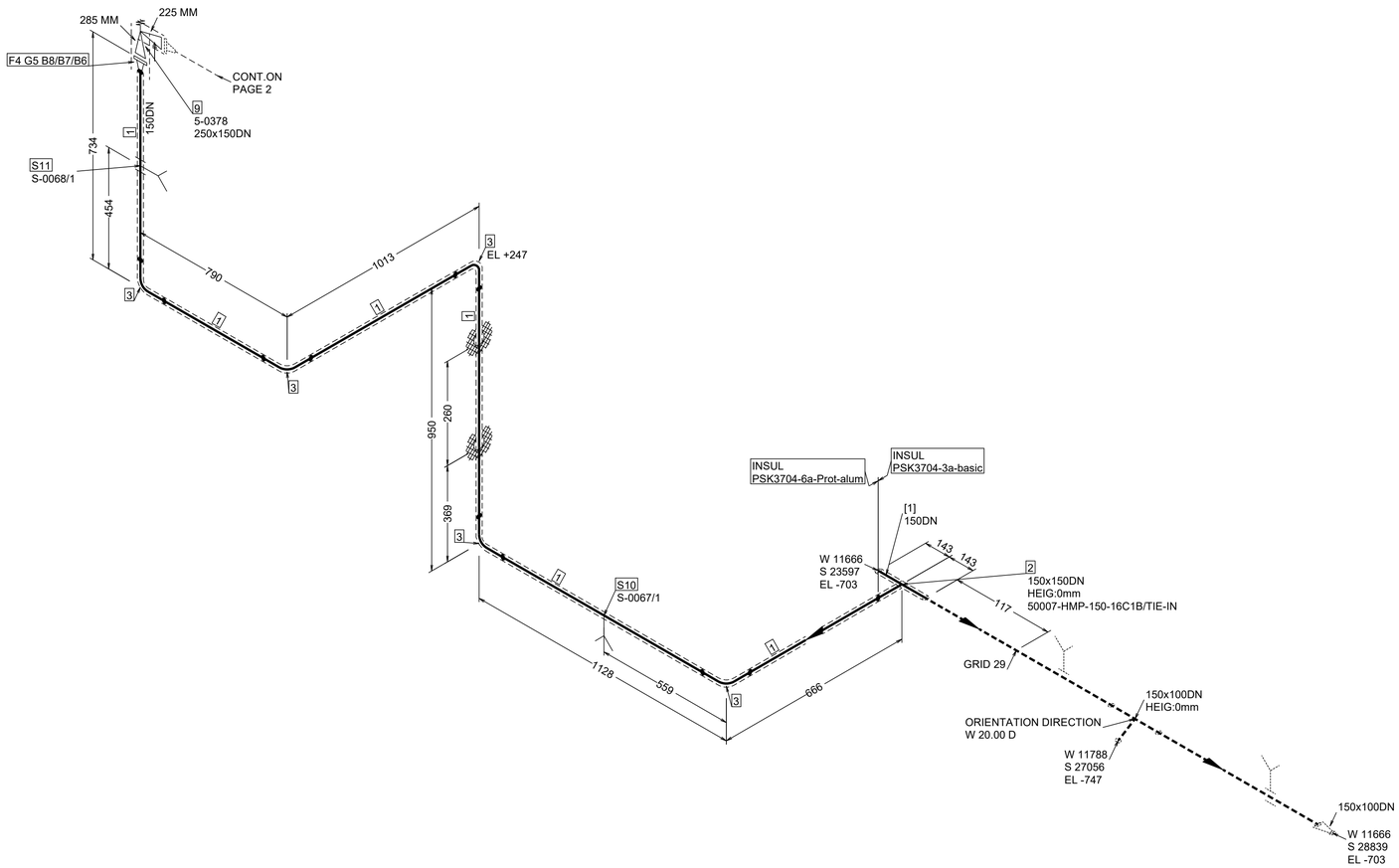

NO	PART DESCRIPTION	DN (MM)	PIPE SPEC	QUANTITY
1	Tube - 168.3 x 4.50 - EN 10216-2 - P235GH-TC1	150	119440-VE16C1C-R00	2793MM
2	Equal tee - EN 10253-2 - type A - 168.3 x 5.60 - P235GH-TC1 50007-HMP-150-16C1B/TIE-IN	150 x 150	119440-VE16C1C-R00	1
3	Elbow - EN 10253-2 - type A - model 3D - 90deg - 168.3 x 4.50 - P235GH-TC1	150	119440-VE16C1C-R00	5
4	Weld-neck flange - EN 1092-1 - type 11 - B1 - 168.3/DN150 - PN16 - P250GH	150	119440-VE16C1C-R00	1

NO	PART DESCRIPTION	DN (MM)	PIPE SPEC	QUANTITY
5	Gasket - EN 1514-1 - type IBC - OD168.3/DN150 - 1.5mm Thk - PN16 Fiber	150	119440-VE16C1C-R00	1
6	80 mm Bolt EN ISO 4014 25CrMo4, EN 10269, mat cert. 3.1, HDG	20		8
7	Hexagon nut EN ISO 4032 25CrMo4, EN 10269, mat cert. 3.1, HDG	20		8
8	Washer EN ISO 7089 Grade A - S235JR EN10025-2 - HDG	20		16
9	KPK BASIC SAFETY VALVE FLANGED PN 16/16 5-0378	250 x 150	KBE/VALV01	1
	SUPPORTS			
10	HANGER PSK 7303 TYPE 12 See supportlist	150	VOFSUPP-PRIM-PSK-ATTA	1
11	2-SIDED AXIAL RESTRAINT PSK 7303 TYPE 8, LOW See supportlist	150	VOFSUPP-PRIM-PSK-ATTA	1

PIPE SPOOLS

[1]

ORIGO & MARKINGS

E 18465 North East N 39915

23 U +-119 G

1 DENOTES PARTS LIST
1 DENOTES WELD NO.
1 DENOTES REVISION
INSULATION
INSUL. + TRACE
BRANCH START POINT

Insulation table (lengths according SSG 7645 Alt2)			
Bore	Thickness	Length	Insulation spec name
300	60mm	143mm	/PSK3704-6a-Prot-alum
150	60mm	5139mm	/PSK3704-6a-Prot-alum
250	60mm	2297mm	/PSK3704-6a-Prot-alum
15	30mm	1581mm	/PSK3704-6a-Prot-alum
150	100mm	286mm	/PSK3704-3a-basic

NOTE:

Site weldings to be added by contractor.

Buildings construction and equipment erection tolerances to be checked by contractor.

Pipe levels and dimensions are according to pipe center line.

Isometric drawings for sizes DN 15-25 are approximate.
Piping contractor is responsible for final routing and supporting.

Welding factor	Acc. to pipe class
Effiency of long. weld	Acc. to pipe class
NDT circ. weld %	-
NDT long. weld %	-
Welding list see doc.	-

		Hazardous CLP content	
Directive	2014/68/EU	Pipe Class	/119440-VE16C1C-R00
Design press. (min)	-1bar	PED Category	I
Design temp. (min)	-	Media	
Max. allow. press. (PS)	-	Standard	
Operating press.	5bar	P&ID	RAU8F00303
Operating temp.	159degC	Design press.	6bar
PED Module	-	Design temp.	220degC
PED Group	-	Test press.	-
Wind loads	-	Pipe list doc. ID	RAUAF04300
External loads	-	Valve list doc. ID	RAUAF04301

For installation tolerances dimensions to be checked by pipe contractor at site.
Degree of prefabrication to be decided by contractor.

Rev	Revision Note	Created by	Checked by	Approved by	Date
0		J. Lakka	T. Saarinen	M. Kankkunen	5/5/2026

Site: Tervasaari, Valkeakoski
Equipment Type: Höyry- ja lauhdejärjestelmä
Equipment ID:
Project Key: TERPM5_N5265A
Project Name: Ter PM 5 Safe Future
Project Number: N5265A
Work:
Projection Method:
Welding Symbols: ISO 2553
General Tolerances: ISO 13 920-BF ISO 2768-mK-E ISO 2768-mK-E ISO 2768-mK-E ISO 2768-mK-E
Scale: -
Size: A1
Weight: -

This document is the exclusive intellectual property of Valmet Corporation and/or its subsidiaries (collectively and individually "Valmet") and is furnished solely for executing and maintaining the specific project. Re-use of the document for any other project or purpose is prohibited. The document or the information shall not be reproduced, copied or disclosed to any third party without the prior written consent of Valmet. By accessing this document, you accept these terms of use.

Title: 50220-HMP-250-16C1B

Status: CERTIFIED
Document ID:
Sheet: 1/ 3
Security Classification: Internal
Revision: 0

Project: VKB Zone: PD1-BM/A/DES/PIPE/HMP DB: PREPAA/PREPAASession: 4583 MDB: /119440.005 25/05/2026

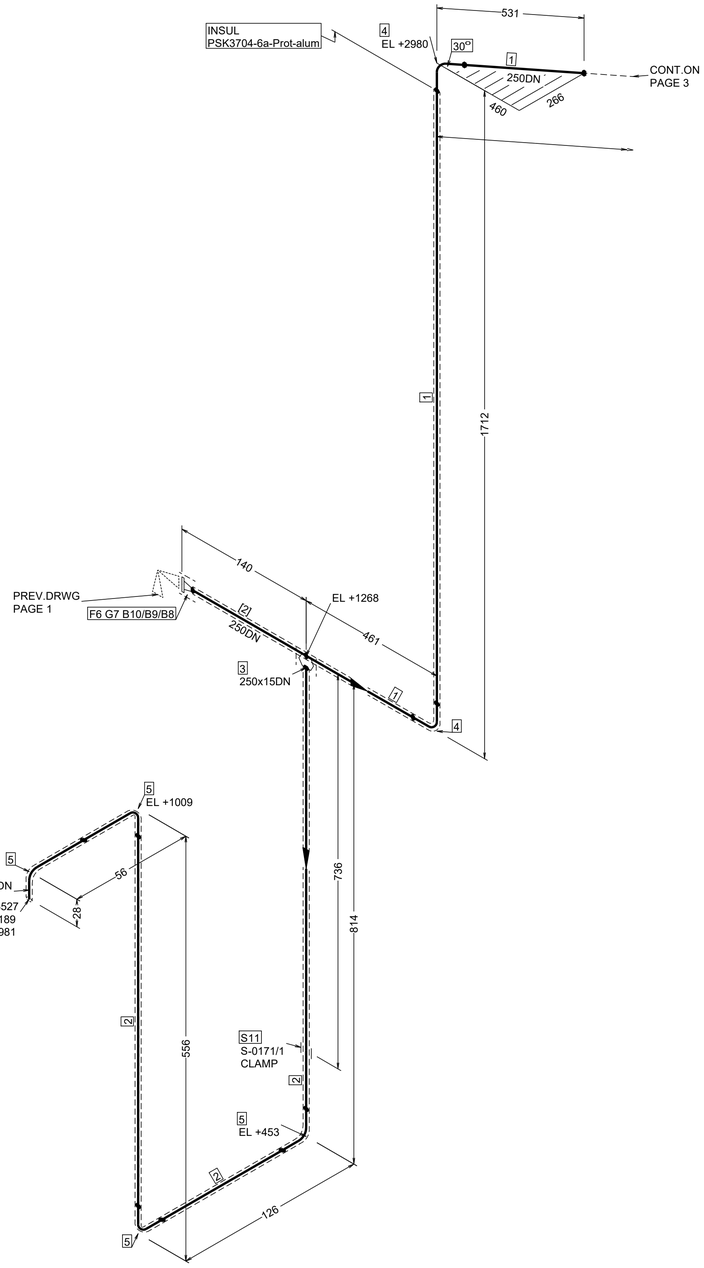

NO	PART DESCRIPTION	DN (MM)	PIPE SPEC	QUANTITY
1	Tube - 273 x 6.30 - EN 10216-2 - P235GH-TC1	250	119440-VE16C1C-R00	1250MM
2	Tube - 21.3 x 2.00 - EN 10216-2 - P235GH-TC1	15	119440-VE16C1C-R00	1120MM
3	Set on Tee with Bran made of EN 10216-2 TUBE 21.3 x 5.00 H=100 - P235GH-TC1	250 x 15	119440-VE16C1C-R00	1
4	Elbow - EN 10253-2 - type A - model 3D - 90deg - 273 x 6.30 - P235GH-TC1	250	119440-VE16C1C-R00	2
5	Elbow - EN 10253-2 - type A - model 3D - 90deg - 21.3 x 2.00 - P235GH-TC1	15	119440-VE16C1C-R00	4
6	Weld-neck flange - EN 1092-1 - type 11 - B1 - 273/DN250 - PN16 - P250GH	250	119440-VE16C1C-R00	1

NO	PART DESCRIPTION	DN (MM)	PIPE SPEC	QUANTITY
7	Gasket - EN 1514-1 - type IBC - OD273/DN250 - 1.5mm Thk - PN16 Fiber	250	119440-VE16C1C-R00	1
8	100 mm Bolt EN ISO 4014 25CrMo4, EN 10269, mat cert. 3.1, HDG	24		12
9	Hexagon nut EN ISO 4032 25CrMo4, EN 10269, mat cert. 3.1, HDG	24		12
10	Washer EN ISO 7089 Grade A - S235JR EN10025-2 - HDG	24		24
	SUPPORTS			
11	SPECIAL SUPPORT See supportlist CLAMP	15	VOFSUPP-PRIM-PSK-ATTA	1

PIPE SPOOLS

[2]

ORIGO & MARKINGS

North
East
E 18465
N 39915
23
U +-119
G

1 DENOTES PARTS LIST
1 DENOTES WELD NO.
1 DENOTES REVISION
INSULATION
INSUL. + TRACE
BRANCH START POINT

Insulation table (lengths according SSG 7645 Alt2)			
Bore	Thickness	Length	Insulation spec name
300	60mm	143mm	/PSK3704-6a-Prot-alum
150	60mm	5139mm	/PSK3704-6a-Prot-alum
250	60mm	2297mm	/PSK3704-6a-Prot-alum
15	30mm	1581mm	/PSK3704-6a-Prot-alum
150	100mm	286mm	/PSK3704-3a-basic

NOTE:

Site weldings to be added by contractor.

Buildings construction and equipment erection tolerances to be checked by contractor.

Pipe levels and dimensions are according to pipe center line.

Isometric drawings for sizes DN 15-25 are approximate.
Piping contractor is responsible for final routing and supporting.

				Hazardous CLP content	
		Directive	2014/68/EU	Pipe Class	/119440-VE16C1C-R00
		Design press. (min)	-1bar	PED Category	I
		Design temp. (min)	-	Media	
		Max. allow. press. (PS)	-	Standard	
		Operating press.	5bar	P&ID	RAU8F00303
Welding factor	Acc. to pipe class	Operating temp.	159degC	Design press.	6bar
Effiency of long. weld	Acc. to pipe class	PED Module	-	Design temp.	220degC
NDT circ. weld %	-	PED Group	-	Test press.	-
NDT long. weld %	-	Wind loads	-	Pipe list doc. ID	RAUAF04300
Welding list see doc.	-	External loads	-	Valve list doc. ID	RAUAF04301

For installation tolerances dimensions to be checked by pipe contractor at site.
Degree of prefabrication to be decided by contractor.

Rev	Revision Note	Created by	Checked by	Approved by	Date
0		J. Lakka	T. Saarinen	M. Kankkunen	5/5/2026

Site: Tervasaari, Valkeakoski
Equipment Type: Höyry- ja lauhdejärjestelmä
Equipment ID
Project Key: TERPM5_N5265A
Project Name: Ter PM 5 Safe Future
Project Number: N5265A
Work
Projection Method
Welding Symbols: ISO 2553
General Tolerances: ISO 13 920-BF; ISO 2768-mK-E; ISO 2768-mK-E; ISO 2768-mK-E; ISO 2768-mK-E
Scale: -
Size: A1
Weight: -

Valmet

This document is the exclusive intellectual property of Valmet Corporation and/or its subsidiaries (collectively and individually "Valmet") and is furnished solely for executing and maintaining the specific project. Re-use of the document for any other project or purpose is prohibited. The document or the information shall not be reproduced, copied or disclosed to any third party without the prior written consent of Valmet. By accessing this document, you accept these terms of use.

Title
50220-HMP-250-16C1B

Status: CERTIFIED
Document ID
Sheet: 2/ 3
Security Classification: Internal
Revision: 0

Project: VKB Zone: PD1-BM/A/DESI/PIPE/HMP 25/05/2026 DB: PREPAA/PREPAASession: 4583 MDB: /119440.005

NO	PART DESCRIPTION	DN (MM)	PIPE SPEC	QUANTITY
1	Tube - 323.9 x 7.10 - EN 10216-2 - P235GH-TC1	300	119440-VE16C1C-R00	13710MM
2	Tube - 273 x 6.30 - EN 10216-2 - P235GH-TC1	250	119440-VE16C1C-R00	959MM
3	Concentric reducer - EN 10253-2 - type A - 323.9 x 7.10 / 273 x 6.30 - P235GH-TC1	300 x 250	119440-VE16C1C-R00	1
4	Reduced tee - EN 10253-2 - type A - 273 x 6.30 / 168.3 x 5.60 - P235GH-TC1	250 x 150	119440-VE16C1C-R00	1
5	Elbow - EN 10253-2 - type A - model 3D - 90deg - 323.9 x 7.10 - P235GH-TC1	300	119440-VE16C1C-R00	7
6	Elbow - EN 10253-2 - type A - model 3D - 90deg - 273 x 6.30 - P235GH-TC1	250	119440-VE16C1C-R00	2

NO	PART DESCRIPTION	DN (MM)	PIPE SPEC	QUANTITY
	SUPPORTS			
7	SLIDE SUPPORT PSK 7303 TYPE 1, LOW See supportlist	300	VOFSUPP-PRIM-PSK-AT TA	1
8	1-SIDED ANCHOR PSK 7303 TYPE 9, LOW See supportlist	300	VOFSUPP-PRIM-PSK-AT TA	1
9	1-SIDED ANCHOR PSK 7303 TYPE 9, LOW See supportlist	250	VOFSUPP-PRIM-PSK-AT TA	1

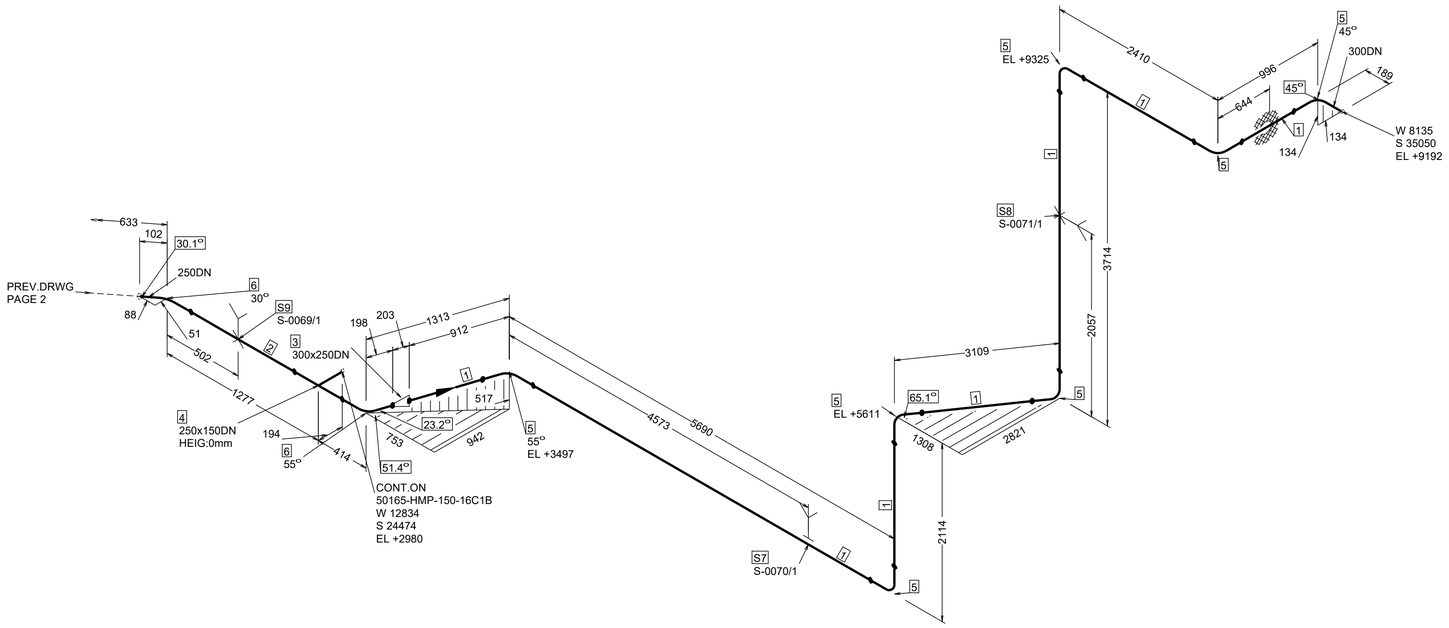

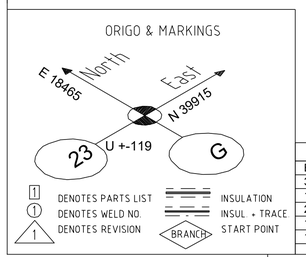

Insulation table (lengths according SSG 7645 Alt2)			
Bore	Thickness	Length	Insulation spec name
300	60mm	143mm	/PSK3704-6a-Prot-alum
150	60mm	5139mm	/PSK3704-6a-Prot-alum
250	60mm	2297mm	/PSK3704-6a-Prot-alum
15	30mm	1581mm	/PSK3704-6a-Prot-alum
150	100mm	286mm	/PSK3704-3a-basic

NOTE:

Site weldings to be added by contractor.

Buildings construction and equipment erection tolerances to be checked by contractor.

Pipe levels and dimensions are according to pipe center line.

Isometric drawings for sizes DN 15-25 are approximate.
Piping contractor is responsible for final routing and supporting.

				Hazardous CLP content	
		Directive	2014/68/EU	Pipe Class	/119440-VE16C1C-R00
		Design press. (min)	-1bar	PED Category	I
		Design temp. (min)	-	Media	
		Max. allow. press. (PS)	-	Standard	
		Operating press.	5bar	P&ID	RAU8F00303
Welding factor	Acc. to pipe class	Operating temp.	159degC	Design press.	6bar
Effiency of long. weld	Acc. to pipe class	PED Module	-	Design temp.	220degC
NDT circ. weld %	-	PED Group	-	Test press.	-
NDT long. weld %	-	Wind loads	-	Pipe list doc. ID	RAUAF04300
Welding list see doc.	-	External loads	-	Valve list doc. ID	RAUAF04301

For installation tolerances dimensions to be checked by pipe contractor at site.
Degree of prefabrication to be decided by contractor.

Rev	Revision Note	Created by	Checked by	Approved by	Date
0		J. Lakka	T. Saarinen	M. Kankkunen	5/5/2026

Site: Tervasaari, Valkeakoski		Equipment Type: Höyry- ja lauhdejärjestelmä	Equipment ID
Project Key: TERPM5_N5265A	Project Name: Ter PM 5 Safe Future	Project Number: N5265A	Work
Projection Method	Welding Symbols: ISO 2553	General Tolerances: ISO 2768-mK-E ISO 2768-mK-E ISO 13 920-BF ISO 2768-mK-E ISO 2768-mK-E	Scale: - Size: A1 Weight: -

This document is the exclusive intellectual property of Valmet Corporation and/or its subsidiaries (collectively and individually "Valmet") and is furnished solely for executing and maintaining the specific project. Re-use of the document for any other project or purpose is prohibited. The document or the information shall not be reproduced, copied or disclosed to any third party without the prior written consent of Valmet. By accessing this document, you accept these terms of use.

Title: 50220-HMP-250-16C1B

Status: CERTIFIED	Document ID	Sheet 3/ 3
Security Classification: Internal		Revision 0