Huy Pham's Portfolio

BS/MS in Mechanical Engineering at Case Western Reserve University

hbp16@case.edu | https://www.linkedin.com/in/huy-pham-925389200/

I. Research Projects

Design and Prototype of A Robotic Rat

Problem:

- Needed a robot to test the neural network controller.

Methods:

- Used a pulley-belt system to reduce leg inertia, lowering motor power consumption and noise.
- Designed the leg with internal supports to withstand high belt tension and prevent buckling under compression.
- 3D printed initial prototypes using PLA for low cost and quick turnaround.
- Final parts were printed with Onyx, a carbon fiber–reinforced thermoplastic, offering a high strength-to-weight ratio for lighter and stronger components compared to standard plastics or metals.
- Used power tools to machine stock metal parts, customizing their size and geometry to fit the design requirements.

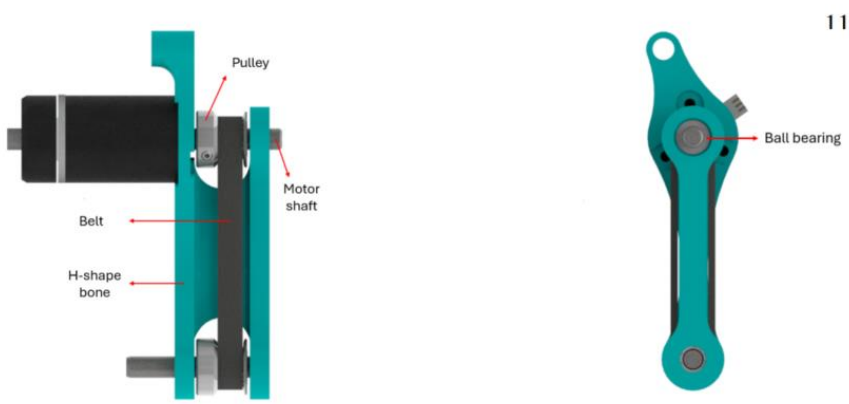

Initial leg segment design. While it effectively supports the motor shaft, it remains vulnerable to buckling under high compressive stress.

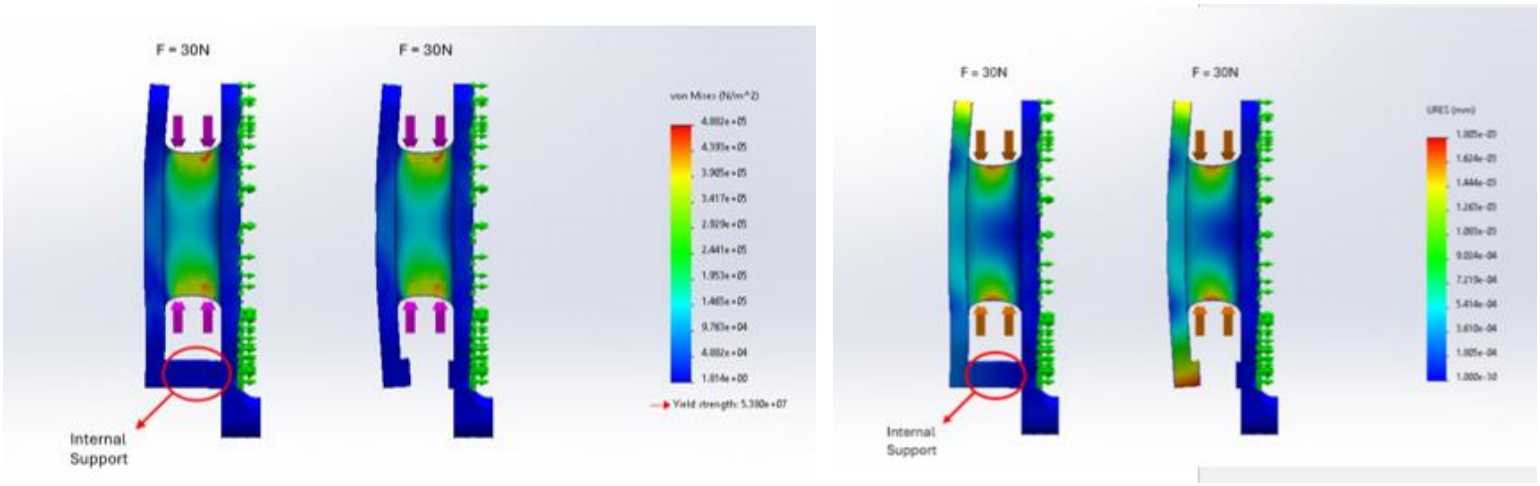

An internal support is implemented to address that issue. The FEA study shows that internal support helps reduce deflection of the part under high compressive stress, ensuring structural stability and maintaining the intended geometry. The deformation scale of the simulation is 1 : 2000.

Design and Prototype of A Robotic Rat

Methods

- Inserted a screw to lock rotation of a leg segment with the rotating shaft.
- Designed compliant feet for biomimicry and shock absorption.

Insertion of a screw to lock the rotation in the leg segment with the rotating shaft.

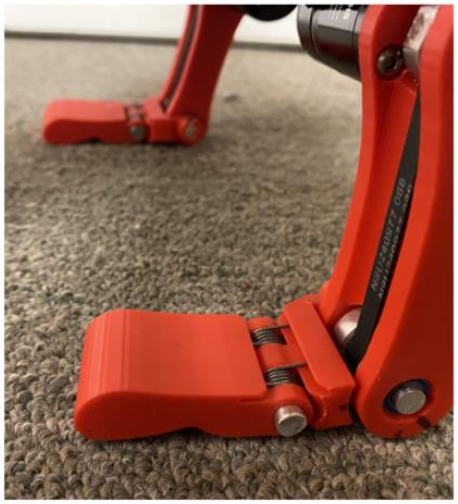

Two-segment foot with torsion spring incorporated increases compliance.

- Designed the custom PCB, soldered wires, and designed the electronic housing to streamline wiring.

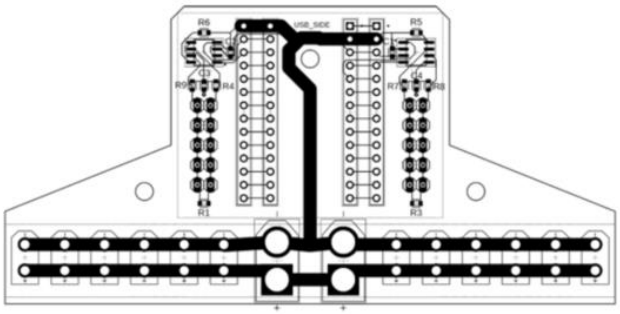

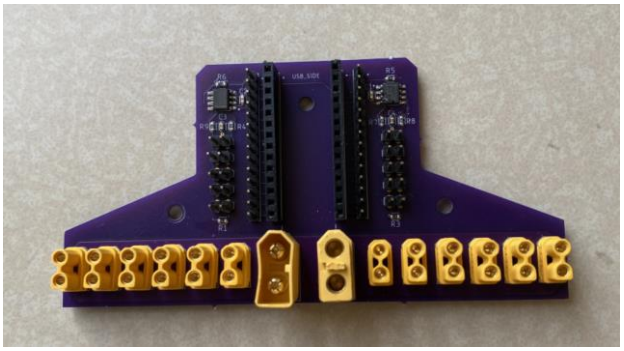

Schematic and the prototyped PCB.

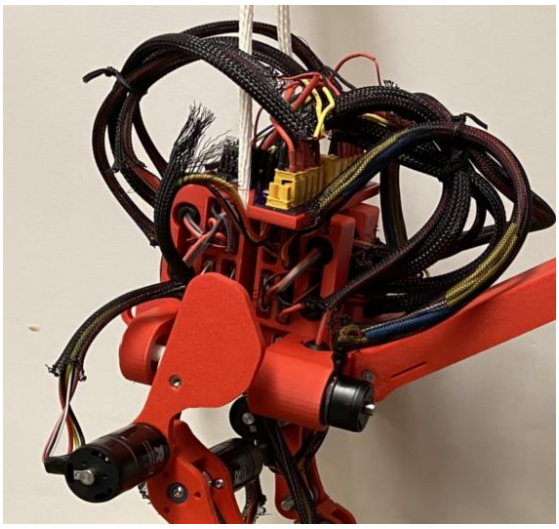

The electrical carrier securely holds the speed controllers in place, protecting them from damage. Wires are packed in braided sleeving to facilitate electrical packaging.

Design and Prototype of A Robotic Rat

Methods

- Designed and built a test rig to conduct testing on three joints in the sagittal plane of the robot.

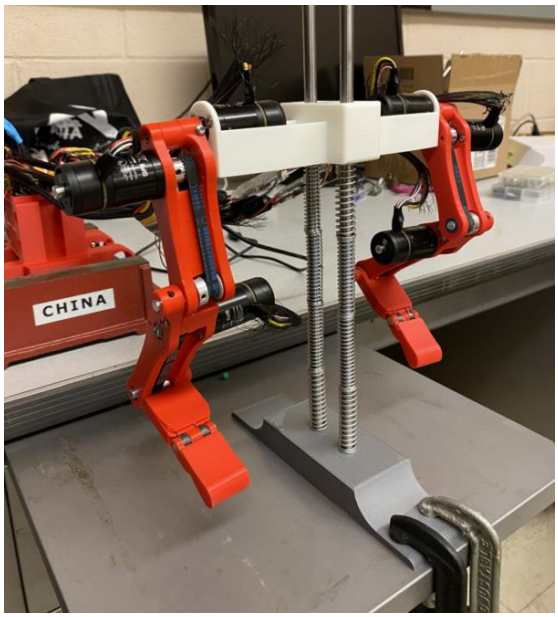

Figure 7: The mount was designed to allow for self-supported walking movements. Linear bearings are implemented inside the ribcage (the white part) to minimize friction while translating.

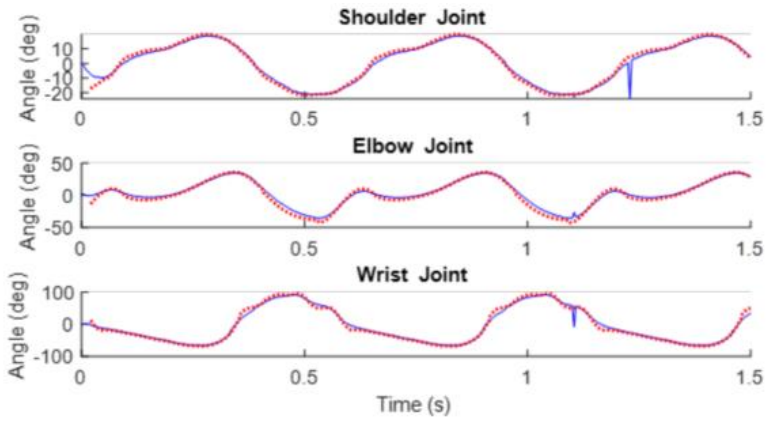

Figure 8: Results from position control testing. The commanded position data is based on the animal walking data.

Results:

- A robot with 18 degrees of freedom in total was successfully built and performed well in position control testing.

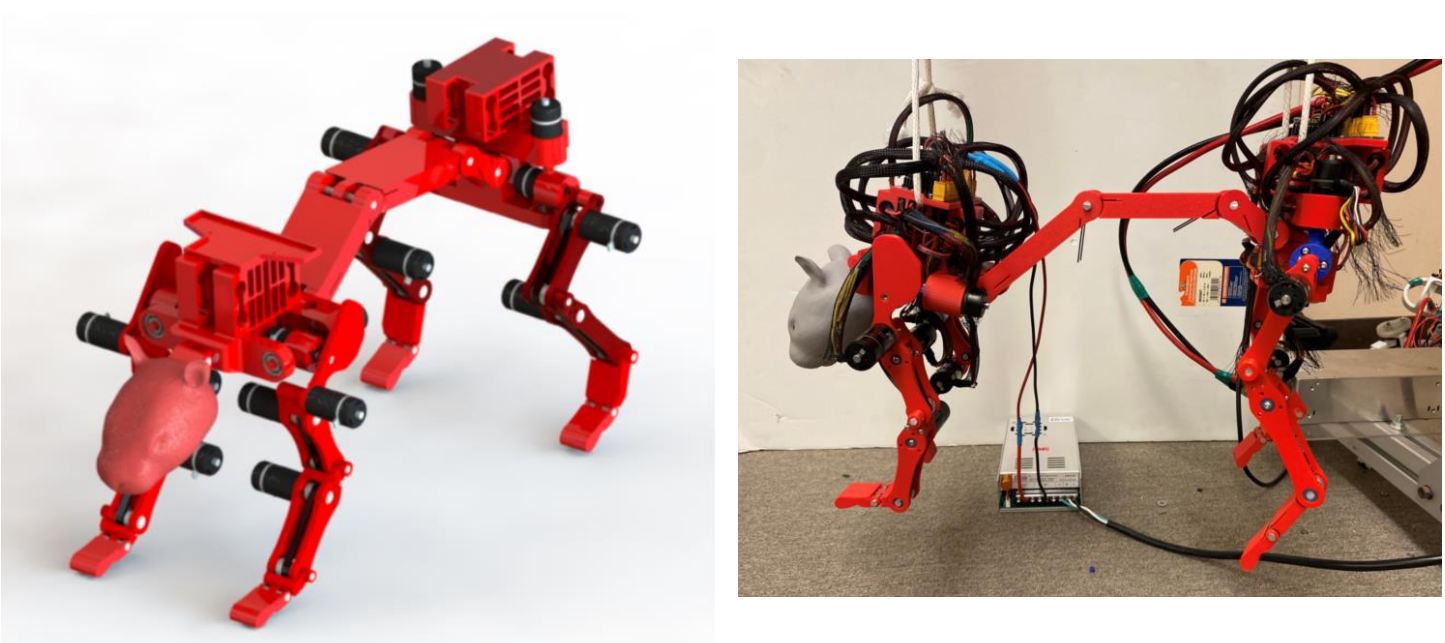

Figure 9: CAD model vs. Physical model of the robot

II. Industrial Projects

Test Rig Design and Fabrication – Johnson Electric

Problem:

- Needed a test rig to study the efficiency of our motorized roller.

Methods:

- Brainstormed and designed a test rig with a motorized roller connected to a dynamometer to measure output torque.
- Used a pulley-belt system to transfer torque, as the roller could not be directly connected to the dynamometer.
- Fabricated the prototype using aluminum plates.
- Drilled mounting holes on the plate using a drill press.
- Milled hexagonal holes to fit the roller's connecting piece. I then milled a slot for power wire access to the hex hole, simplifying assembly.
- Modified the idler pulley to fit the roller by boring its inner diameter on the lathe.
- Built the rig assembly and conducted testing.

Result:

- Calculated motor efficiency under real-life conditions and reported results to the electrical team for design improvements.

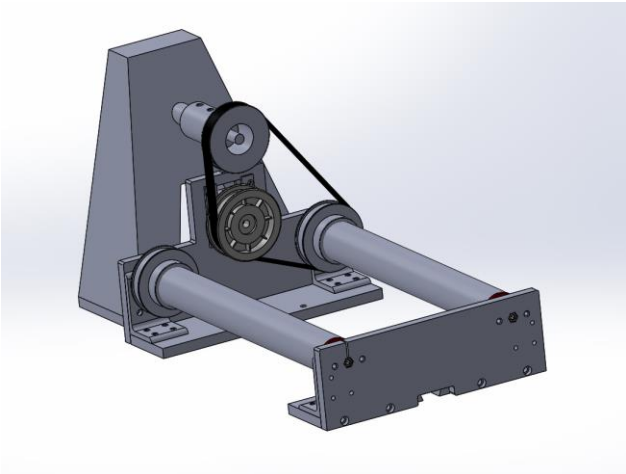

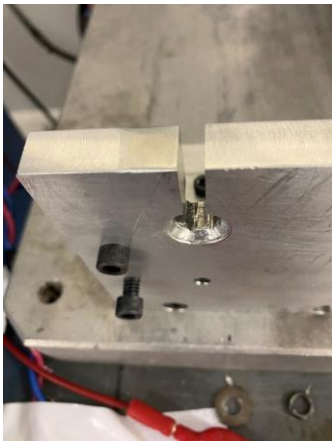

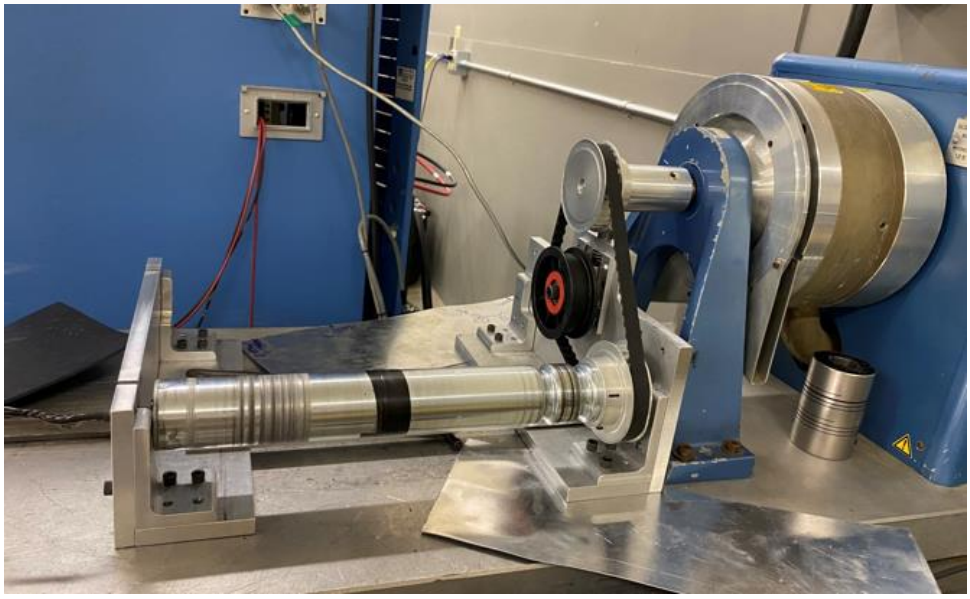

Additional Design Projects – Johnson Electric

1. Belt-Conveyor Braking Mechanism:

- I designed a fail-safe braking mechanism for an inclined conveyor belt system using two half-disks covered with friction material. An electric rotary actuator holds the disks apart during normal operation by applying counterclockwise torque. If power is lost, the actuator returns to its default position clockwise via a scotch yoke mechanism, causing the disks to shift and engage the roller, bringing the system to an immediate stop for enhanced safety.

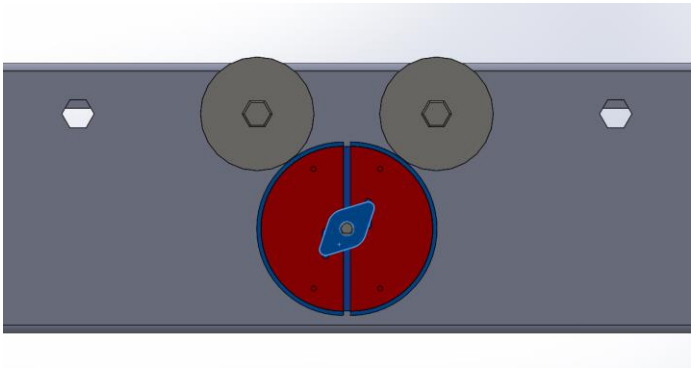

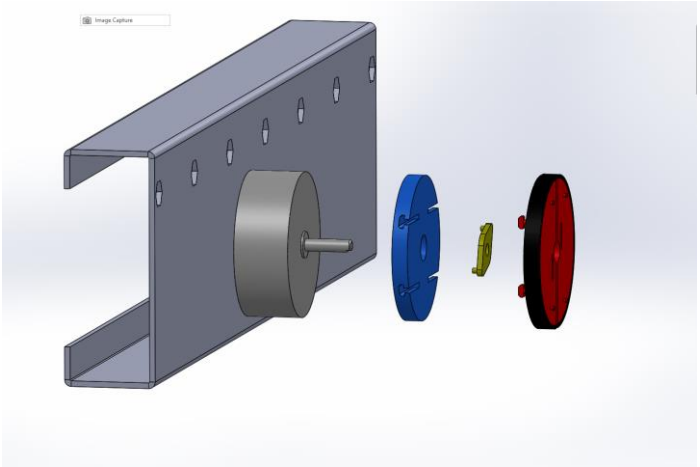

2. Redirecting Packages on a Conveyor System:

- Although mounting a roller at an offset angle to the rail is possible, a perpendicular setup is preferred. I brainstormed two concepts to direct packages to one side of the conveyor. The first idea uses universal joints to transfer rotation from a perpendicularly mounted roller to a longer, angled roller—effective but assembly-intensive. The second idea, inspired by worm gears, adds helical patterns to the roller surface to guide packages sideways. This design is easier to assemble but more challenging to manufacture.

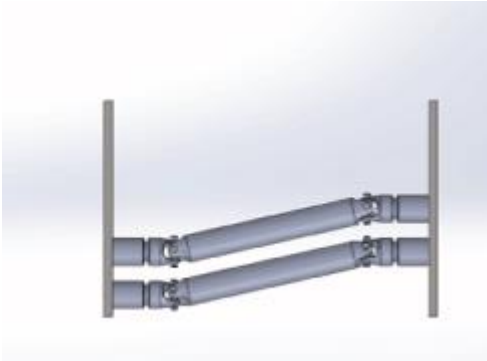

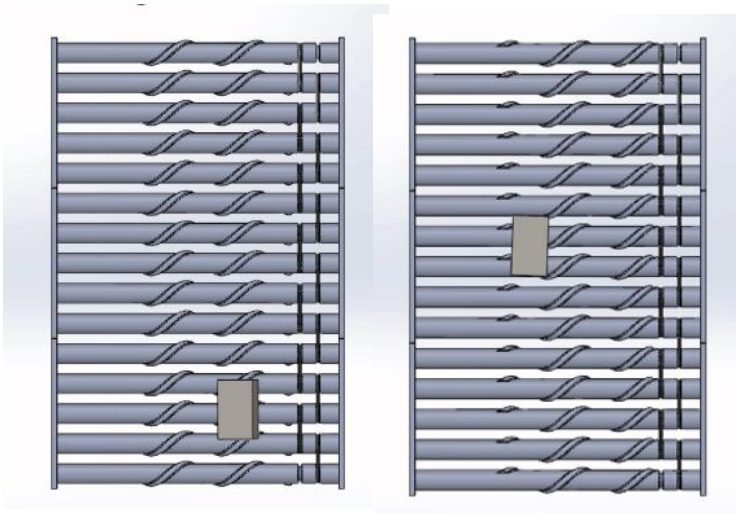

Separation Area in Handheld Vacuum - SharkNinja

Problem:

- Debris buildup on the filter can reduce the efficiency of a conventional handheld vacuum.

Methods:

- Brainstormed, designed and experimented a separation area on the dustcup to trap debris.

Result:

- The separation area effectively trapped most debris, ranging from fine particles to large grains.

Filter Automatic Release Mechanism - SharkNinja

Problem:

- In conventional handheld vacuums, users must manually open the filter to release debris, raising sanitation concerns.

Methods:

- Designed and 3D printed an automatically releasing filter connected to the dust cup via a four-bar mechanism; the filter opens when the dust cup is opened and returns to its default position when the dust cup is closed.

Result:

- The design performed well in testing; however, it resulted in a trade-off with reduced airwatts as airflow is partly obstructed.

Blocking Kicked-out Debris - SharkNinja

Problem:

- Identified an issue in upright vacuum cleaners where large debris can be kicked out by the brush roll, scattering it across the area, especially in backward stroke.

Methods:

- Designed and implemented triangular features on the bottom of the vacuum nozzle to block debris from being kicked out while still guiding it into the nozzle.

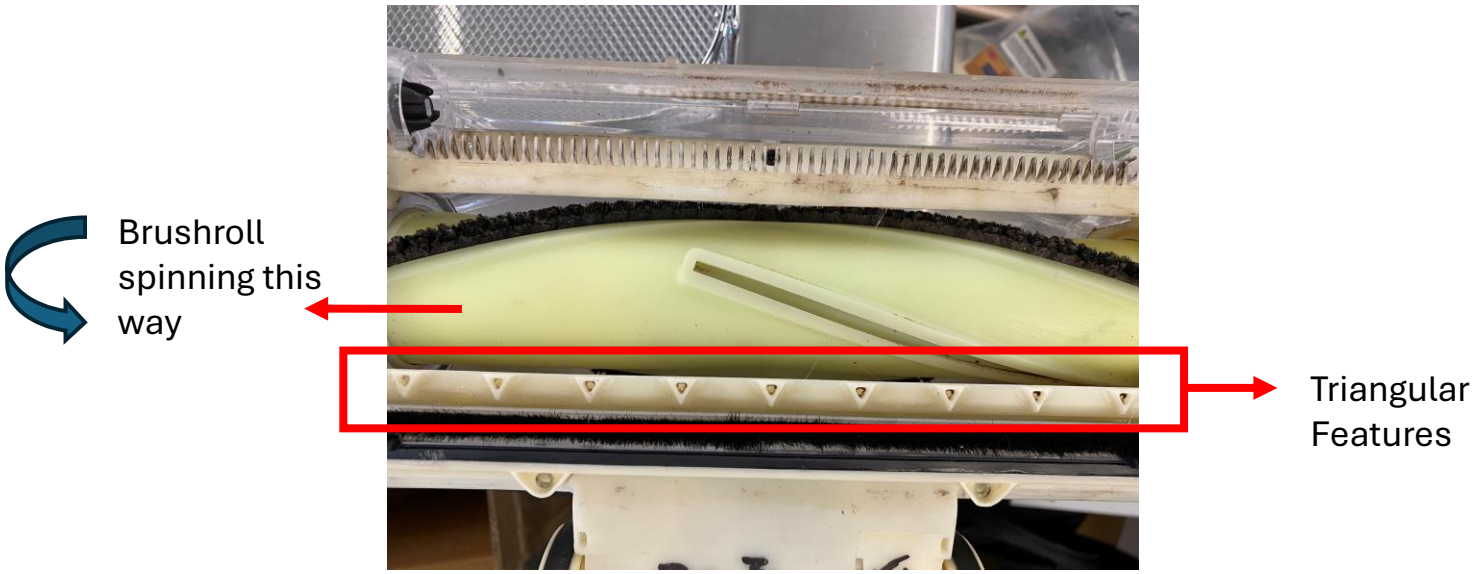

- Performed testing to validate the solution's effectiveness by comparing the weight of collected debris in the dust cup with and without the triangular features, given the same initial amount of debris.
- Optimized the feature geometry for improvement.

Result:

- Triangular features reduced debris being kicked out of the nozzle by 74%.

User’s Safety Improvement - SharkNinja

Problem:

- Users risk injury if the hose connector strikes their hand during inspection.

Methods:

- Designed and 3D printed a kickstand to hold the hose connector open, preventing it from slamming on the user’s fingers.

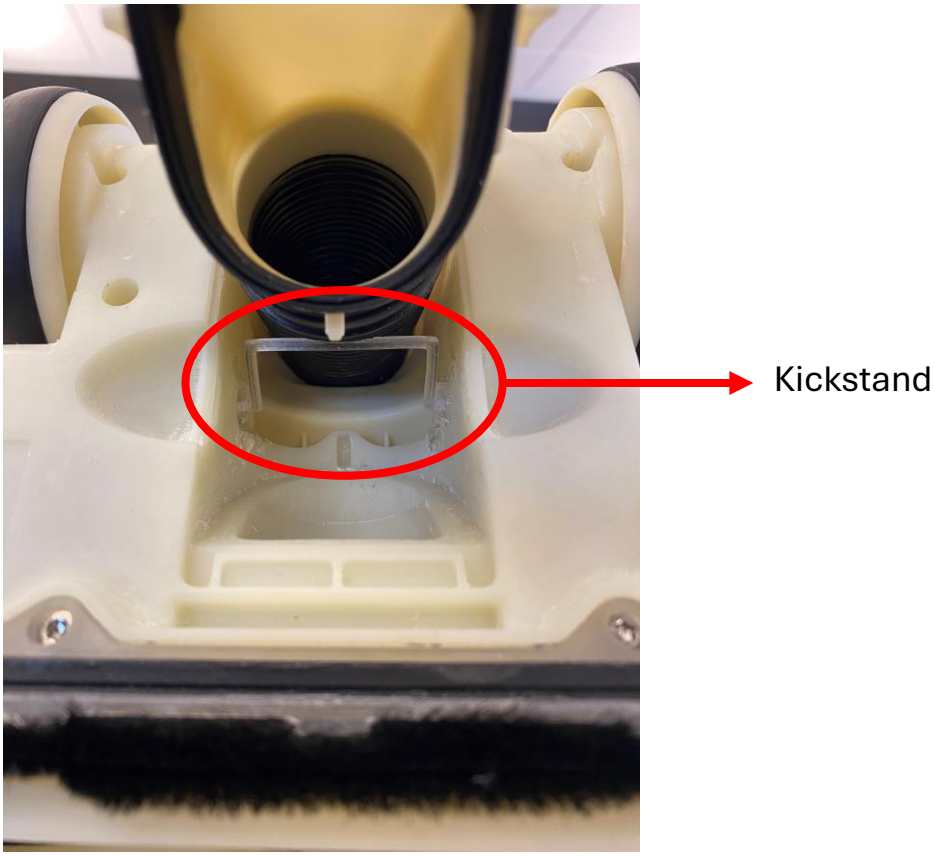

Result:

- The concept proved practical and was incorporated into future designs.

III. Class Projects

FEA Lead – Inline V4 Engine Project

- I collaborated with 10 students on a Capstone Project to design an inline V4 engine, leading the FEA team. I conducted stress analyses on the camshaft, connecting rod, and crankshaft using Ansys to ensure structural integrity under operating conditions.
- For the camshaft FEA, the model was fixtured with compression-only boundary conditions applied to the flange on the end of the shaft, where the camshaft connects to the rest of the powertrain. Loads were applied on two of the cam lobes to simulate the maximum valve spring force during the cycle. Additionally, a rotating inertial load of 3500 RPM was applied along the x-axis passing through the center of the camshaft. The camshaft is made of AISI 4340 primarily for its high hardness wear resistance.

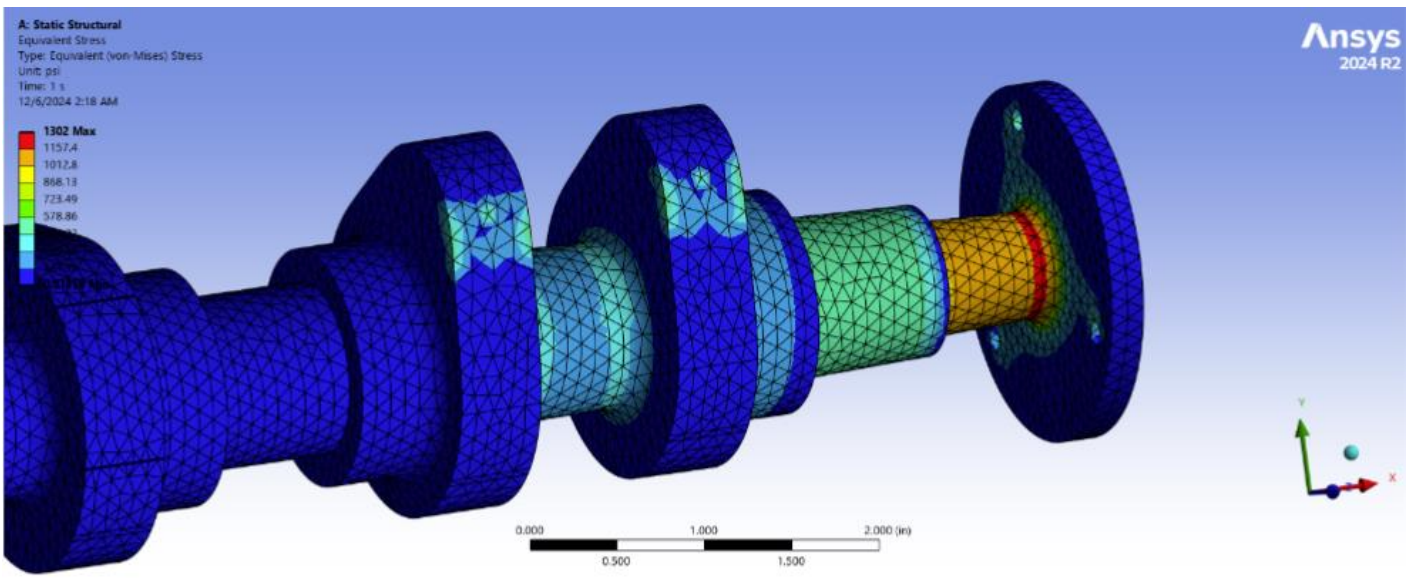

The maximum equivalent stress within the component was calculated to be 1.3 ksi, which is substantially below the 10^8 cycle fatigue strength for AISI 4340 of 65 ksi .

FEA Lead – Inline V4 Engine Project

- For the connecting rod FEA, an assembly was used to model the interaction between the connecting rod and the connecting rod cap in order to ensure that the stresses were accurately distributed within the rod. The main connecting rod and the connecting rod caps are bolted together, and this is simulated using beam elements. A beam element is used to model the bolt body, rbe2 (rigid) beam elements are used to model the bolt head contact, and rbe3 (deformable) beam elements are used to model the bolt thread contact. This ensures that the model has appropriate stiffness and that the two components are appropriately constrained relative to each other. A remote point was used to apply a 10,420 lb force along the y-axis to the inner surface of the upper bore. For the lower bore connection to the crankshaft, the top and bottom halves of the bore were constrained independently. The top half (located on the connecting rod) bears the majority of the load during the power stroke, and is therefore fixed. The bottom half (located on the connecting rod cap) only provides radial and axial constraints.

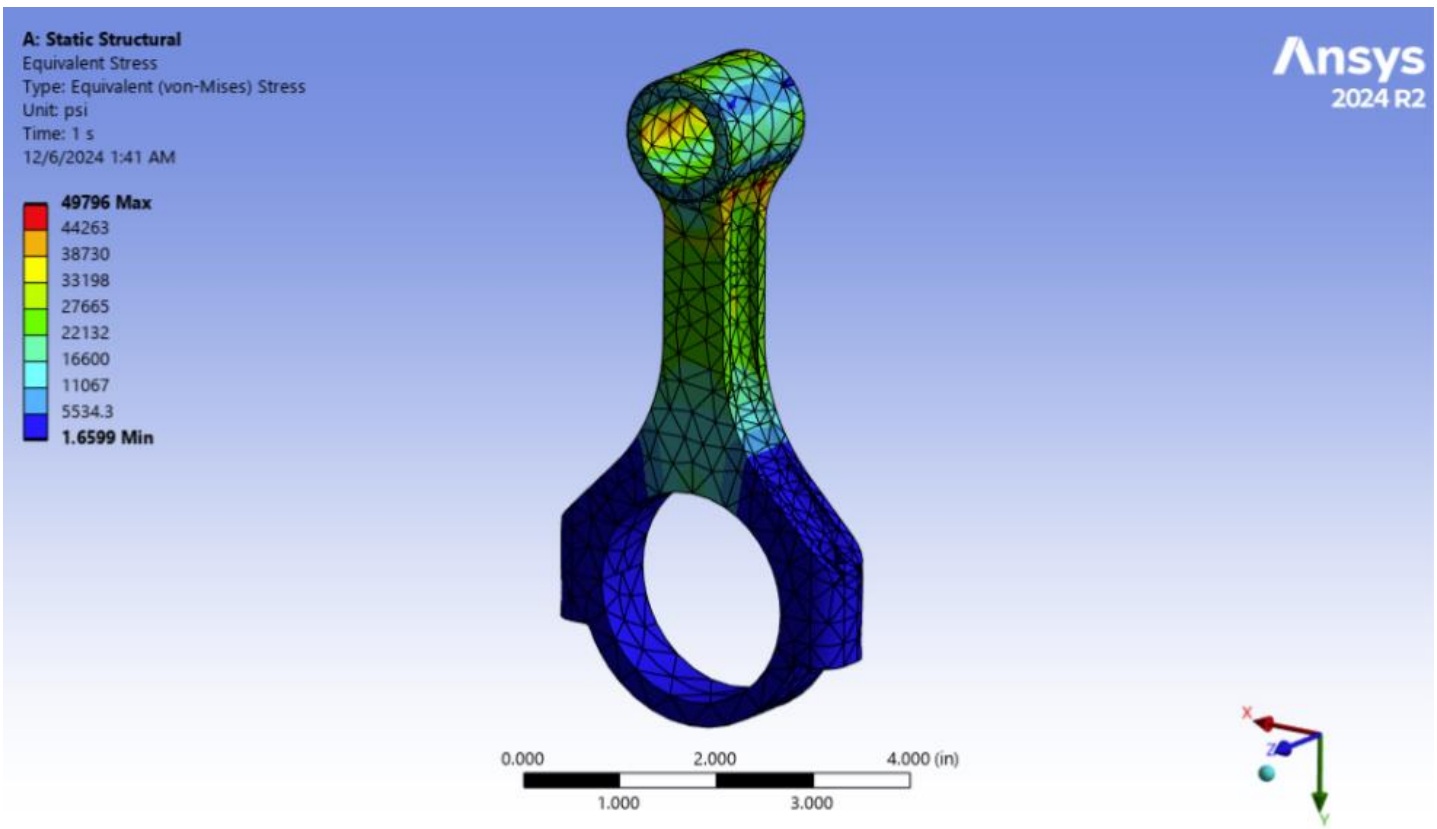

The connecting rod is made of AISI 4340, and develops a maximum stress of 49.8 ksi in the FEA, which is below the 10^8 cycle fatigue strength for AISI 4340 of 65 ksi.

FEA Lead – Inline V4 Engine Project

- For the crankshaft FEA model, cylindrical supports were applied to the journal bearing faces to permit rotation about the x-axis passing through the center of the part, and to restrict axial and radial translation. A rotational constraint about the x-axis was applied at the connection flange. A remote point was used to apply a 10,420 lb force (maximum combustion pressure of multiplied by the piston area) from the piston position to one connecting rod bearing surface at a 30-degree angle to simulate the load transfer through the piston and connecting rod to the camshaft.

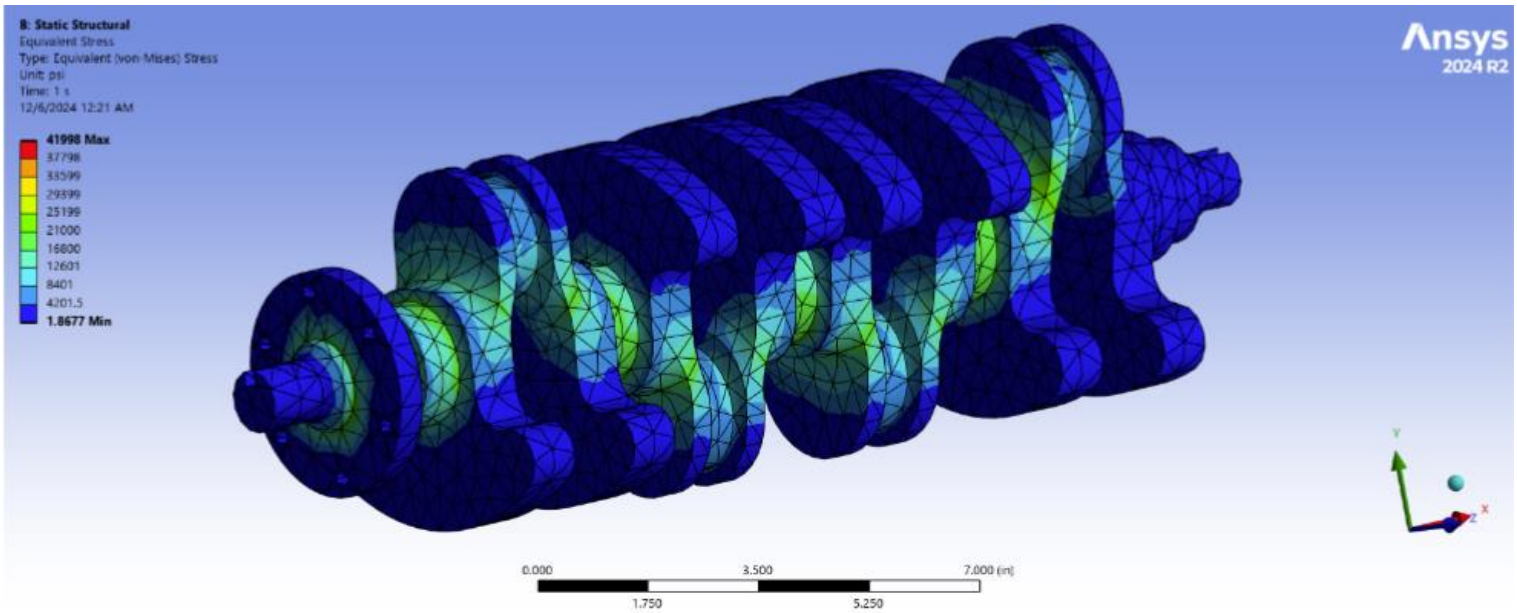

The maximum equivalent stress during this loading condition was 42 ksi, which is below the 10^8 cycle fatigue strength for AISI 4340 of 65 ksi.

Steel Hammer Fabrication

- I used various power tools — including a vertical bandsaw, grinding wheels, mill, lathe, and drill press — to fabricate a steel hammer head and handle. I then used a CNC mill to engrave letters onto the hammer head.

IV. Personal Projects

Manually Controlled Fan Toy

- My friend got this fan as a souvenir from Italy, but the crankshaft broke due to fatigue. I redesigned a new crank with geometry that minimized stress concentration — something the original injection-molded design could not achieve due to manufacturing limits on thickness. I then 3D printed the improved part.

Stress concentration which accelerates fatigue failure

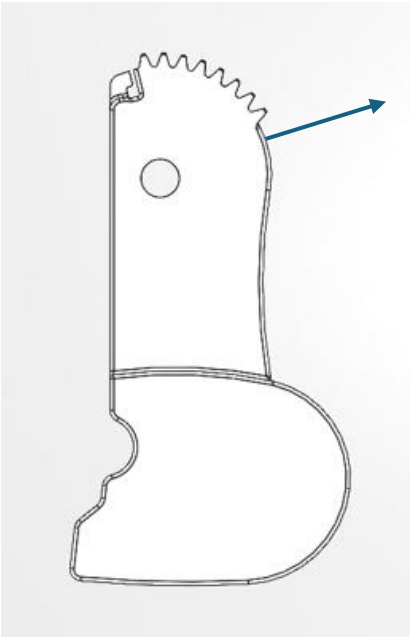

Eliminated abrupt geometry changes and increased thickness to enhance durability and extend the component's lifecycle.

The fan with the newly redesigned crank has been successfully assembled

Uphill Roller

- I designed and 3D printed this “magic” phenomenon based on a physics problem I solved in high school. The concept is that when you place the roller at the bottom of the hill, it appears to roll upward. The trick lies in the triangular slot design—while the roller seems to move uphill, its center of mass is actually moving downward.. The relationships between the angles are given by:

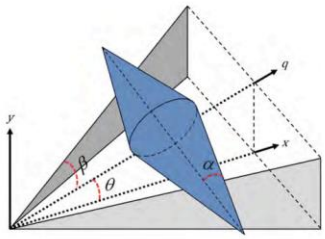

Design of a double cone and rails. Motion is *mainly* determined by the angles: α, β, and θ. The condition for the double cone to roll uphill is:

$$\tan\theta < \tan\alpha \tan\beta.$$

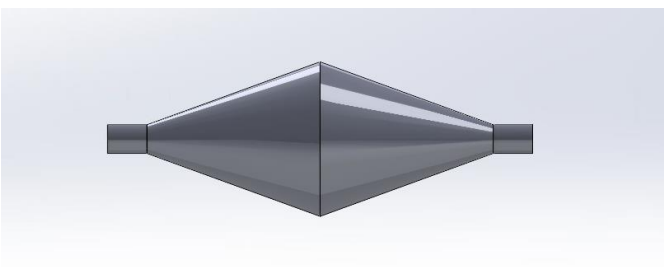

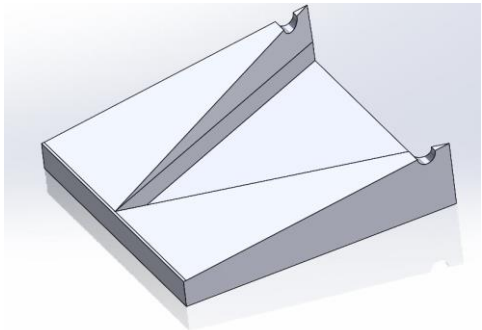

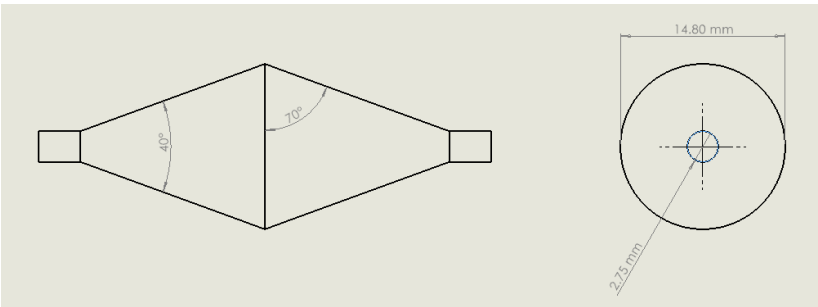

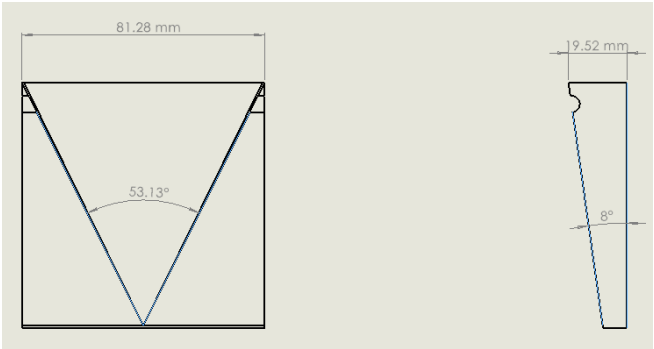

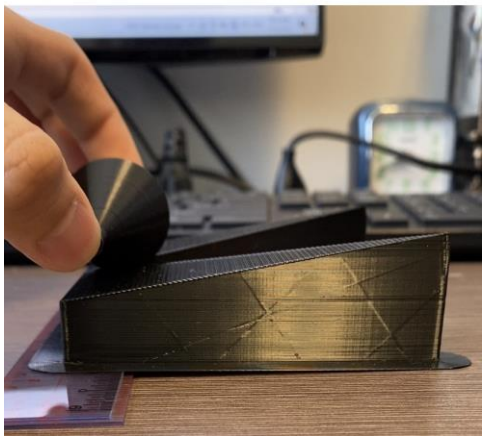

Gift for Friends

- I designed this gift for my friends to celebrate their college graduation. The part was 3D printed and can be used as a flower vase.

Thank you!