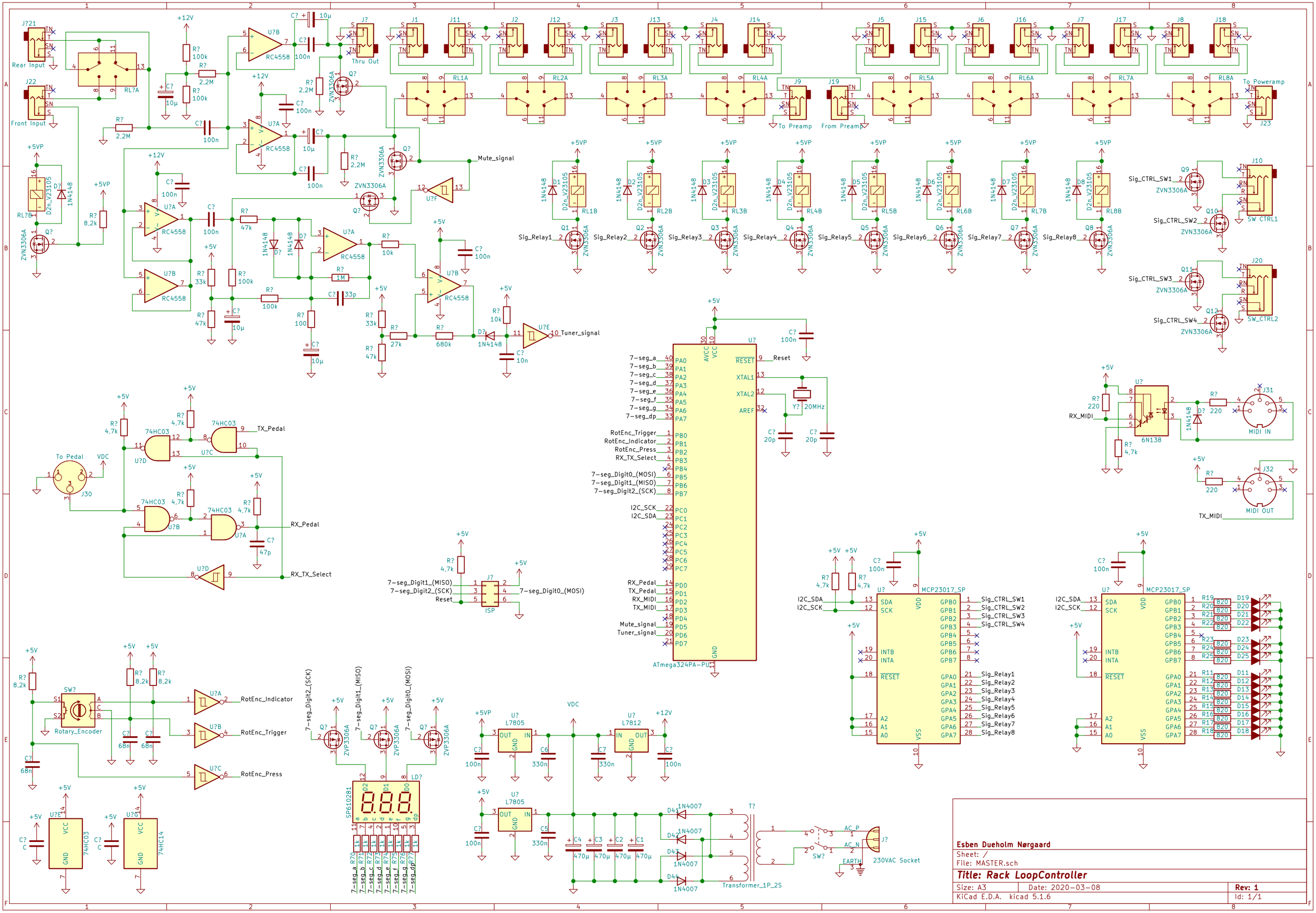

Esben Dueholm Nørgaard

Sheet: /

File: MASTER.sch

Title: Rack LoopController

Size: A3	Date: 2020-03-08	Rev: 1
KiCad E.D.A. kicad 5.1.6		Id: 1/1