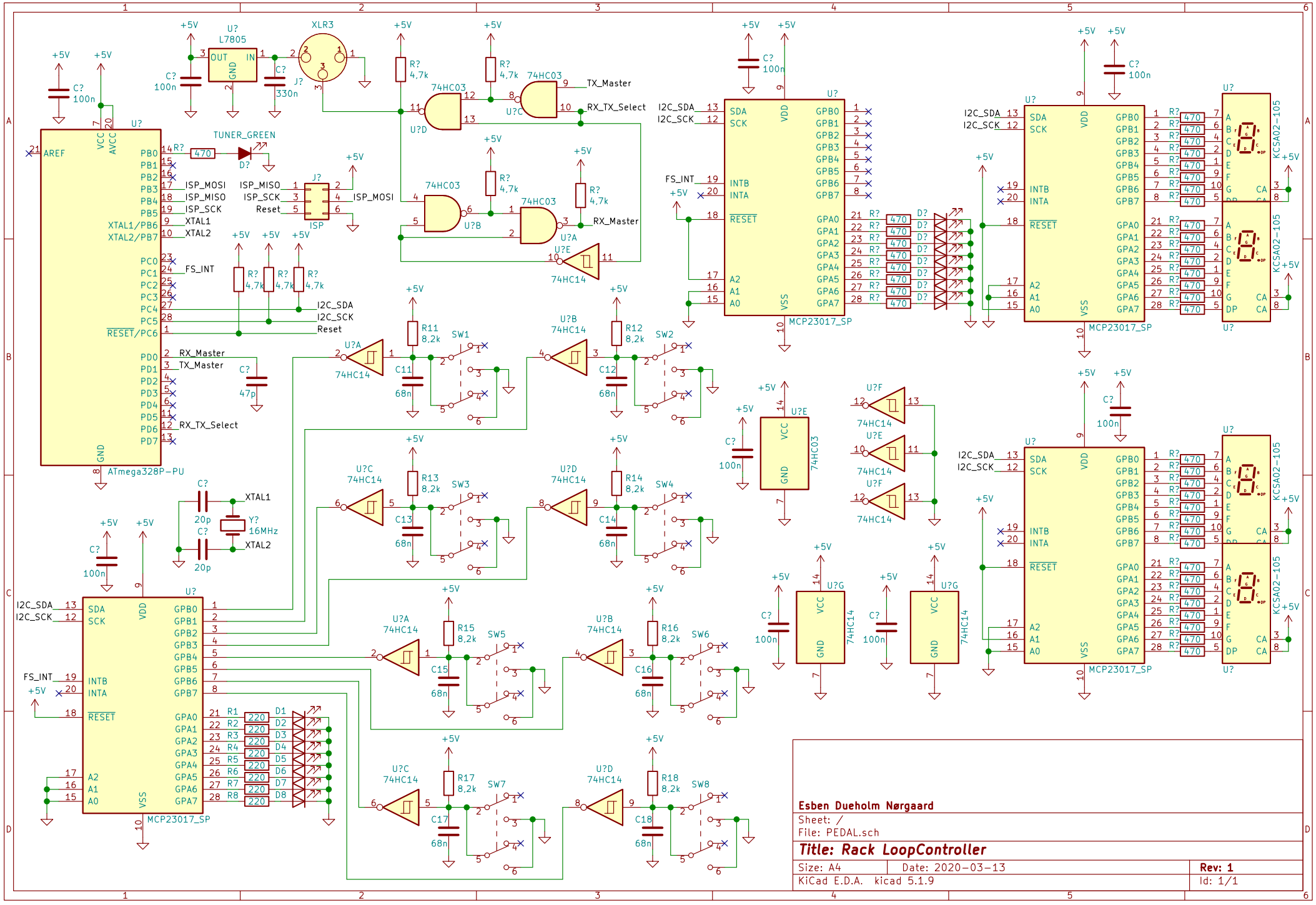
ATmega328P-PU
MCP23017_SP
74HC03
74HC14
L7805
XLR3
TUNER_GREEN
ISP
Y? 16MHz
KCSA02-105
I2C_SDA
I2C_SCK
FS_INT
RX_Master
TX_Master
RX_TX_Select
ISP_MOSI
ISP_MISO
ISP_SCK
XTAL1
XTAL2
Reset
Esben Dueholm Nørgaard
Sheet: /
File: PEDAL.sch
Title: Rack LoopController
Size: A4
Date: 2020-03-13
Rev: 1
KiCad E.D.A. kicad 5.1.9
Id: 1/1