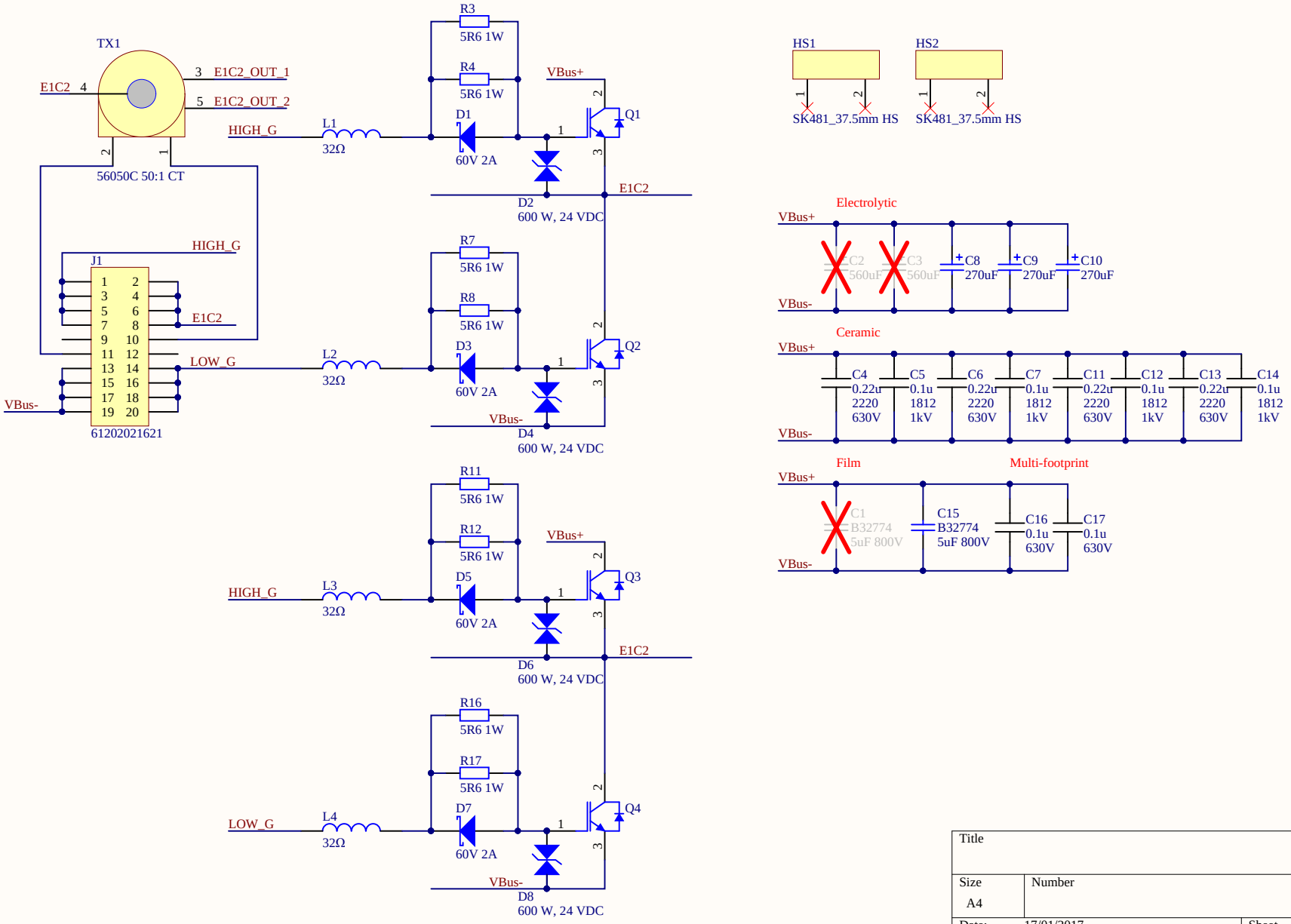

Title		
Size A4	Number	Revision
Date: 17/01/2017	Sheet of	
File: C:\Users\..\QCW Bridge PCBA.SchDoc	Drawn By:	

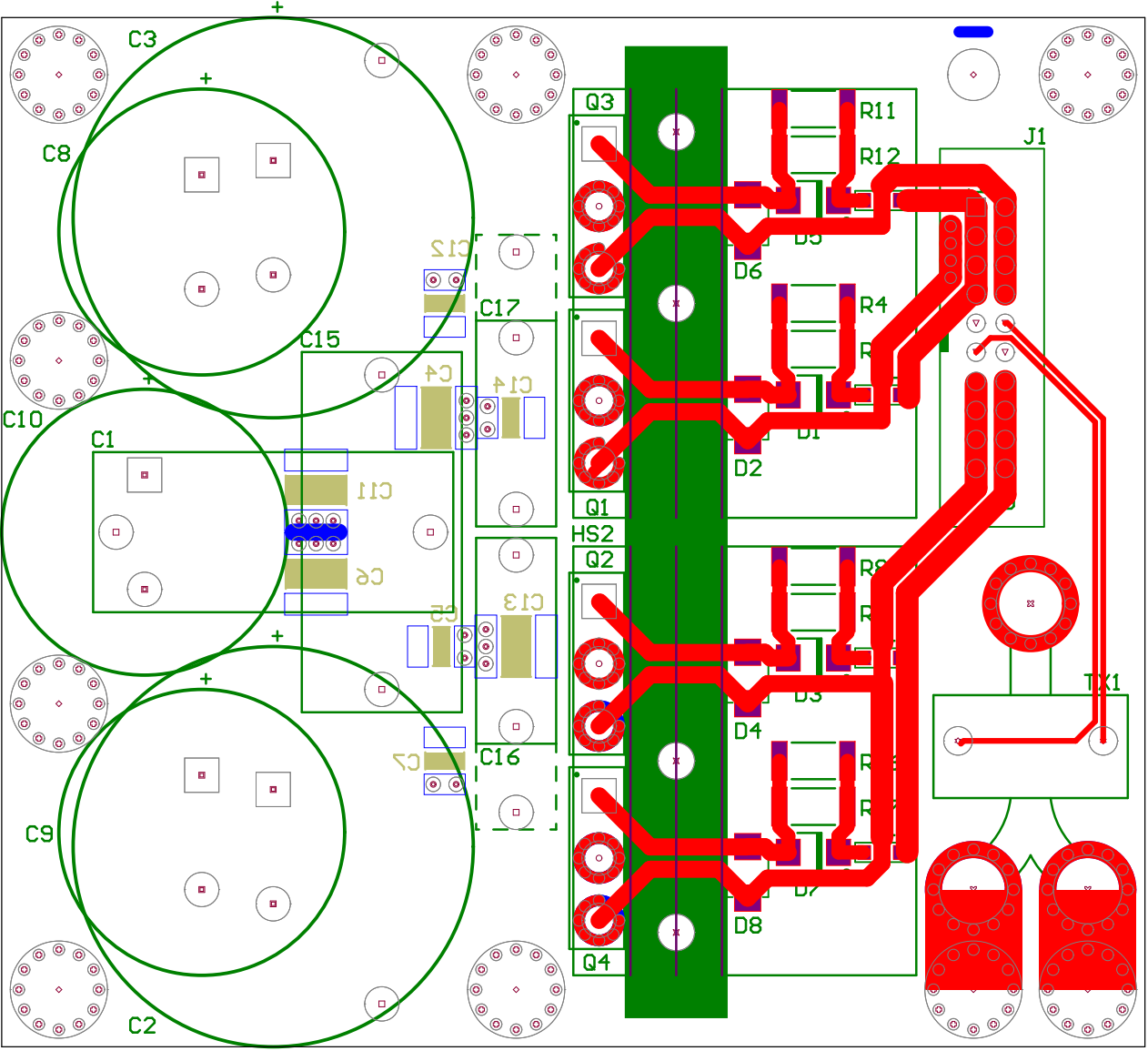
C3
C8
C10
C1
C9
C2
C15
C12
C17
C4
C14
C11
C6
C5
C13
C7
C16
Q3
Q1
HS2
Q2
Q4
R11
R12
D5
D6
R4
D1
D2
D3
D4
D7
D8
J1
TX1

C17
C16
HS2
TX1
56300C
GYYWW

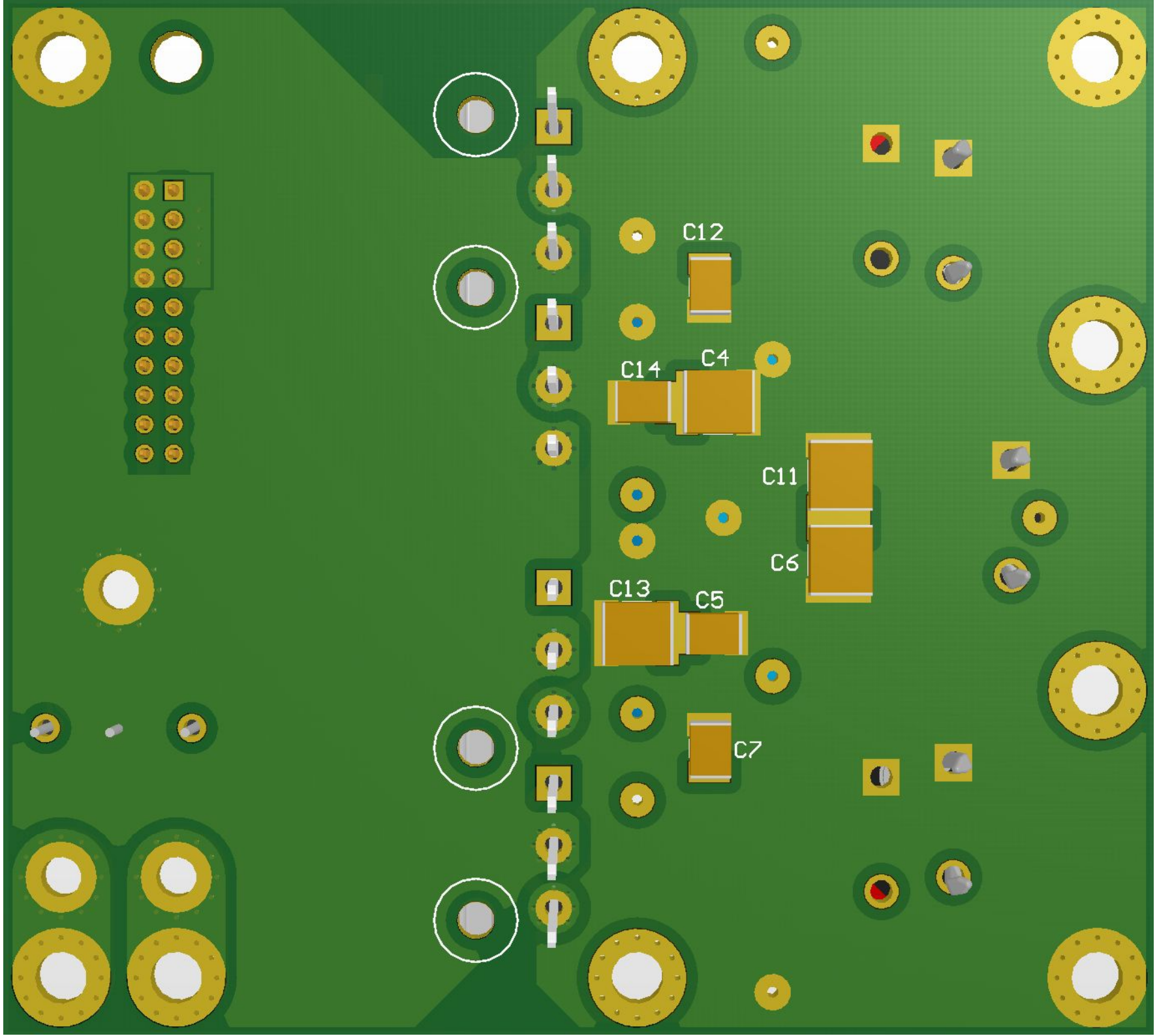
C12
C14
C4
C11
C6
C13
C5
C7