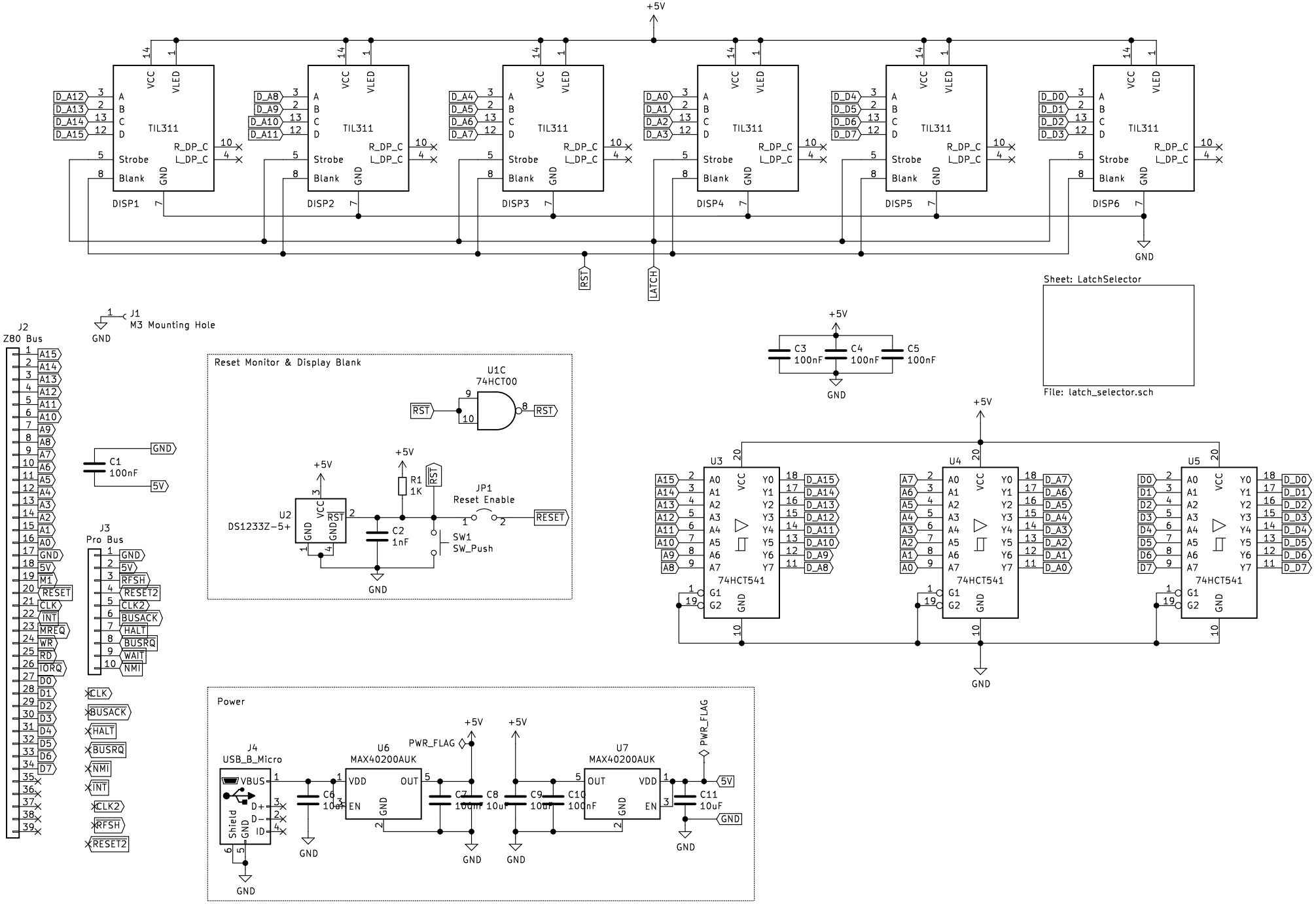
+5V
TIL311
DISP1
DISP2
DISP3
DISP4
DISP5
DISP6
VCC
VLED
Strobe
Blank
GND
R_DP_C
L_DP_C
RST
LATCH
J1
M3 Mounting Hole
J2
Z80 Bus
J3
Pro Bus
C1
100nF
Reset Monitor & Display Blank
U1C
74HCT00
U2
DS1233Z-5+
R1
1K
C2
1nF
JP1
Reset Enable
SW1
SW_Push
RESET
C3
100nF
C4
100nF
C5
100nF
Sheet: LatchSelector
File: latch_selector.sch
U3
U4
U5
74HCT541
Power
J4
USB_B_Micro
U6
MAX40200AUK
U7
MAX40200AUK
PWR_FLAG
C6
10uF
C7
100nF
C8
10uF
C9
10uF
C10
100nF
C11
10uF

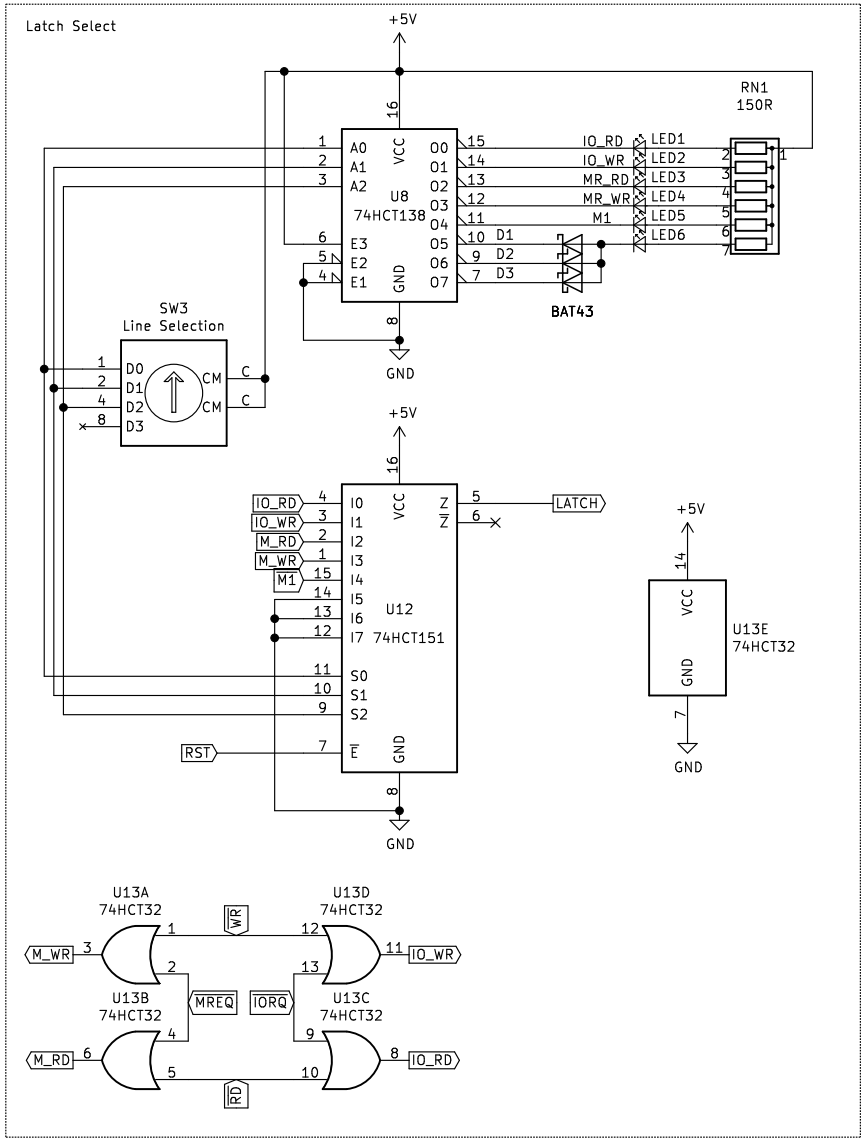
Latch Select
+5V
RN1
150R
U8
74HCT138
A0
A1
A2
E3
E2
E1
VCC
GND
O0
O1
O2
O3
O4
O5
O6
O7
IO_RD
IO_WR
MR_RD
MR_WR
M1
D1
D2
D3
LED1
LED2
LED3
LED4
LED5
LED6
BAT43
SW3
Line Selection
D0
D1
D2
D3
CM
C
U12
74HCT151
I0
I1
I2
I3
I4
I5
I6
I7
S0
S1
S2
Z
LATCH
RST
M_RD
M_WR
U13E
74HCT32
U13A
74HCT32
U13B
74HCT32
U13C
74HCT32
U13D
74HCT32
WR
MREQ
IORQ
RD

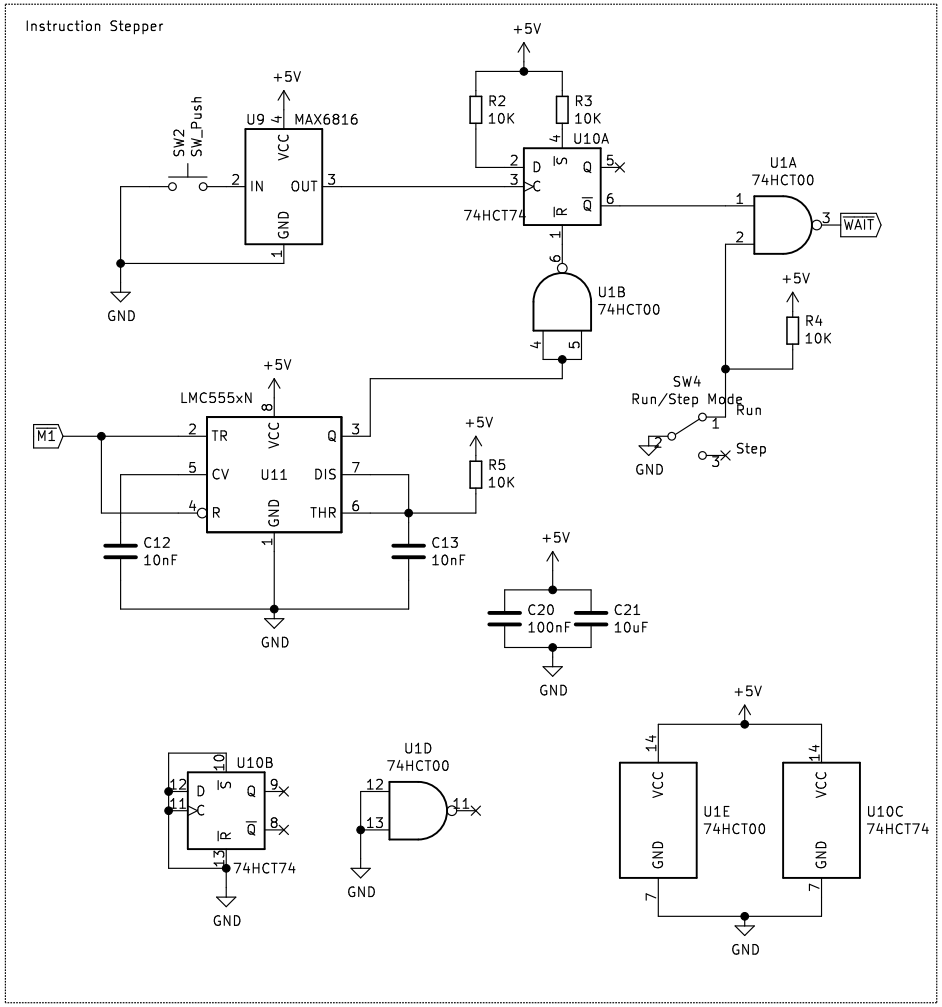
Instruction Stepper
+5V
SW2
SW_Push
U9
MAX6816
IN
OUT
GND
R2
10K
R3
10K
U10A
74HCT74
D
C
S
R
Q
U1A
74HCT00
WAIT
U1B
74HCT00
R4
10K
SW4
Run/Step Mode
Run
Step
LMC555xN
U11
TR
CV
R
VCC
Q
DIS
THR
M1
R5
10K
C12
10nF
C13
10nF
C20
100nF
C21
10uF
U10B
74HCT74
U1D
74HCT00
U1E
74HCT00
U10C
74HCT74

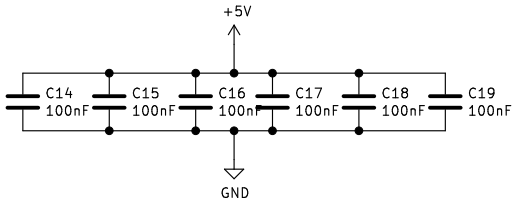
+5V
C14
100nF
C15
100nF
C16
100nF
C17
100nF
C18
100nF
C19
100nF
GND