Georgia Tech HyperJackets
SpaceX 2019 Hyperloop Pod Competition

Final Design Briefing

January 11,2019

1. Team Description 6
Team Structure 7
Core Team 9
Team Description 9
Hardware Ownership 9
Delivery Ownership 9
Vehicle Dynamics Team 9
Team Description 9
Hardware Ownership 9
Delivery Ownership 10
Aerostructures Team 10
Team Description 10
Hardware Ownership 10
Delivery Ownership 10
Electronics Team 10
Team Description 10
Hardware Ownership 11
Delivery Ownership 11
2. Pod Design 12
Top-level design summary 13
Pod dimensions 13
Pod Mass by Subsystem 15
Pod Payload Capability 16
Pod materials 17
Pod power source and consumption 18
Pod state diagram 23
Pod navigation mechanism 25
Pod Propulsion Mechanism 26
Overview 27
Reasoning 28
Pod Braking Mechanism 29
Overview 29

Pneumatic Operations 30
Pneumatic Design Reasoning 31
Pod Stability Mechanisms 32
Vehicle Aerodynamics 33
Aeroshell Design 33
Computational Fluid Dynamics (CFD) Analysis 34
Kantrowitz limit and analytical CFD validation 36
Predicted Pod Thermal Profile 37
Predicted Pod Trajectory 40
Predicted Vibration Environments 41
3. Pod Structural Design Cases 44
Methodology 45
Critical Structural Components 45
Deceleration due to braking 45
Aeroshell Weight Support 52
Off-Nominal Crash 55
4. Pre-Competition Subsystem & Pod Functional Testing Process 56
Propulsion and Braking Systems 57
Electronic Systems 57
Overview 57
Component Tests 57
Module level testing 59
5. Pod Manufacturing Plan 61
Pod production schedule 62
Team Design Reviews and Deadlines 62
Vehicle Dynamics Production Schedule 62
Aerostructures Production Schedule 63
Electronics Production Schedule 63
Pod Cost Breakdown and Funding Plan 64
6. Electronics System Overview 65
Sensor List and Location Map 67
General Firmware Overview 67

Embedded Module Descriptions 67
Master Computer 67
Motor Interface 68
Braking Controller 68
PID Diagram 68
Battery Management System 69
Fiducial Monitor 69
Embedded Module State Diagrams 70
Braking Controller 70
States 70
Fiducial Monitor 73
States 73
Overall Warnings (Warnings that could happen at any state) 74
Overall Faults (Faults that could happen at any state) 74
Motor Interface 75
States 75
Overall Warnings 76
Overall Faults 76
Battery Management System 77
States 77
Overall Warnings 78
Overall Faults 78
Details of TEST State 78
Internal Communications 79
Motor Communication 80
Braking 82
Battery 85
Fiducial 89
Master Computer 91
External Communications 91
External Pod Monitoring 92
Cabling Diagrams 93

High Voltage Cabling 93
High Voltage Diagram 94
6. Scalability of the Pod Design 95
System Size 96
Increased tube length 96
Increased tube diameter 96
Increasing pod length 96
Increasing pod cross-sectional area 96
Cost & Maintenance 96
Consumables 96
Maintenance 97
7. Loading & Unloading Plan 98
Pod Transportation from Staging Area to Hyperloop Test Track 99
Pod Transportation from Hyperloop Test Track to Exit Area 100
Ready-to-Launch Checklist/State 100
Ready-to-Remove Checklist/State 101
Before approach 101
On approach 101
After approach 101
9. Safety Related Features 102
Stored Energy on the Pod 103
Pressure Vessel 103
Batteries 103
List of Hazardous Materials 103
Description of Safety Features 103
Overview 103
Hardware and software inhibit on braking during acceleration 104
Mechanisms to mitigate a complete loss of Pod power 104
Mechanisms to mitigate a pressure loss 104
Pod robustness to a tube breach resulting in rapid pressurization 105
Fault tolerance of braking, levitation, and other subsystems 105
Single point of failures within the Pod 105

Recovery plan if Pod becomes immovable within tube 105
Implementation of the Pod-Stop Command 105
Battery Safety Features 106
10. Isolation Fault Detection System 108
Pod Faults 110
11. Vacuum Combability Analysis 116
Pod Speed & Operation 117
Safety & Scalability 117

1. Team Description

The Georgia Tech HyperJackets is a diverse group of 40 undergraduate and graduate students who are working to propel the development of the "5th mode of transportation", the Hyperloop. Our team consists of students from a wide variety of majors including aerospace, mechanical, computer, and electrical engineering as well as material and computer science. We share interest and experience in CAD, machining, rapid prototyping, PCB design, CFD, etc.

Team Structure

Our team is broken down into 3 systems and is led by a Core team of officers and system leads. The three systems are as follow: Vehicle Dynamics, Aerostructures, and Electronics. Each system is further broken down into subsystems.

Vehicle Dynamics is comprised of braking, stability, and propulsion subsystems. Aerostructures is comprised of chassis, aeroshell, and materials subsystems. Electronics is comprised of battery, PCB hardware, PCB firmware, interconnects, and software subsystems. Members of each subsystem are responsible for their respective hardware throughout the design process; this includes design, analysis, prototyping, testing, validation, and manufacturing.

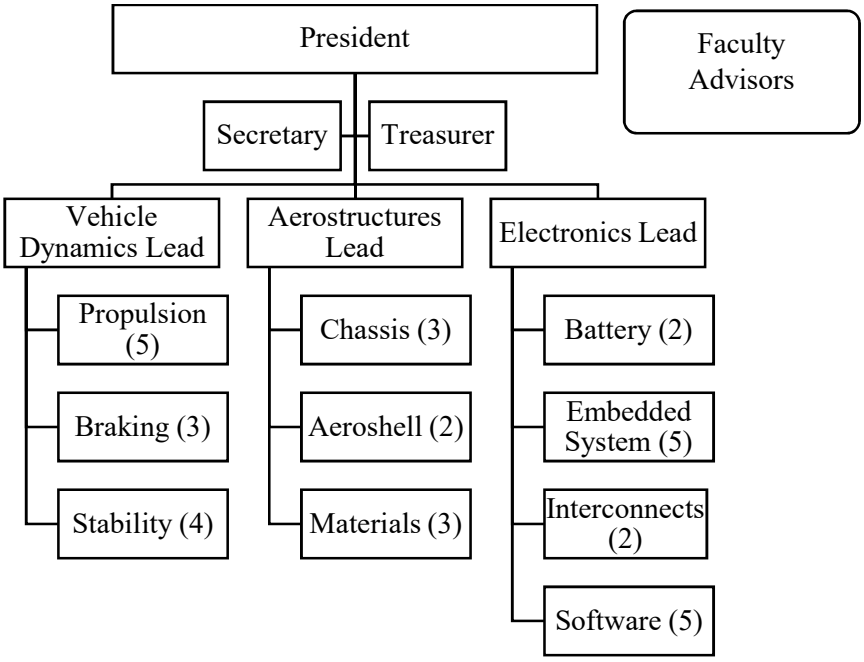

Figure 1. Team structure and members per subsystem team.

Table I. Team members and faculty advisors.

Member	Role	Member	Role
Rony Islam	President	Khang Vu	Vehicle Dynamics
Matt Corrado	Treasurer	Tarun Nadimpalli	Vehicle Dynamics
Alex Bustos	Secretary	Charles Malloch	Vehicle Dynamics
Austin Leal	Electronics Lead	John Ryu	Vehicle Dynamics
Elliot Dowd	Aerostructures Lead	Nachiketh Narreddy	Vehicle Dynamics
Justin Brothers	Vehicle Dynamics Lead	Rui Pinto	Vehicle Dynamics
Omar Allam	Electronics	Sanket Sane	Vehicle Dynamics
Robert Kuramshin	Electronics	Robby Nelson	Vehicle Dynamics
Arjun Sabnis	Electronics	Khang Vu	Vehicle Dynamics
Mufutau Akuruyejo	Electronics	Andy Jeong	Vehicle Dynamics
Amir Suhail	Electronics	Nicholas Mulka	Vehicle Dynamics
Daniil Budanov	Electronics	Michael Schaja	Vehicle Dynamics
Carlos Menendez	Electronics	Owen Seeber	Vehicle Dynamics
Nikhil Rajan	Electronics	Dr. Lakshmi Sankar	Faculty Advisor
Will Gulian	Electronics	Dr. Claudio Di Leo	Faculty Advisor
Robert Turko	Electronics	Dr. Jim Hamblen	Faculty Advisor
Ananda Badari	Electronics		
Joe Ni	Electronics		
Abdullah Shah	Electronics		
Justin Li	Electronics		
Eduardo Trunci	Aerostructures		
Simon Pahlsmeyer	Aerostructures		
Sharath Yalla	Aerostructures		
Raj Patel	Aerostructures		
Privthi Rathaur	Aerostructures		
Bhavik Desai	Aerostructures		
Ayush Jha	Aerostructures		

Core Team

Team Description

The Core team has six members and is comprised of the team officers, which includes the President, Treasurer, and Secretary, as well as system leads for Vehicle Dynamics, Aerostructures, and Electronics. The team is responsible for tasks related to organizational structure, team finances, systems integration, and maintaining collaboration environments such as the team Slack, PDM, and document repository.

Hardware Ownership

The Core team does not have direct ownership of any hardware on the pod. Rather, the team acts as a system integrator.

Delivery Ownership

Table II. Core Delivery Ownership

Deliverable	System
Production Schedule	Core
Scalability Analysis	Core
Cost Breakdown	Core
Funding Plan	Core

Vehicle Dynamics Team

Team Description

The Vehicle Dynamics team is responsible for all components on the pod that interact with the track at any point during the run. This includes the design, analysis, validation, and manufacturing for the propulsion, braking, and stability systems. The team is also responsible for implementation of safety features related to all dynamical systems, including having spring-loaded brakes, voltage-protected motors, etc.

Hardware Ownership

Table III. Vehicle Dynamics Hardware Ownership

Hardware	Subsystem	System
Brake Subassemblies	Braking	Vehicle Dynamics
Air tank, hosing	Braking	Vehicle Dynamics
Motor	Propulsion	Vehicle Dynamics
Wheels	Propulsion	Vehicle Dynamics
Motor Controllers	Propulsion	Vehicle Dynamics
Wheel Rockers	Stability	Vehicle Dynamics

Delivery Ownership

Table IV. Vehicle Dynamics Delivery Ownership

Deliverable	Subsystem	System
Brake Pad Thermal Model	Braking	Vehicle Dynamics
Braking Test Program	Braking	Vehicle Dynamics
Propulsion Test Program	Propulsion	Vehicle Dynamics
Pod Thermal Profile	Propulsion	Vehicle Dynamics
Dynamic Model	Propulsion/Braking	Vehicle Dynamics
Pod Vibration Model	Stability	Vehicle Dynamics

Aerostructures Team

Team Description

The Aerostructures team is responsible for the chassis, structures, and aeroshell of the pod. This includes designing mounting points for components, aerodynamic and structural analysis, validating simulations, as well as manufacturing for the aluminum chassis and composites aeroshell. The Aerostructures team is also designing the loading and unloading system and procedures. The team is responsible for all structural safety features for the chassis, including having a safety factor of 8 during our maximum braking stage (5g), when the highest structural loads are applied to the pod.

Hardware Ownership

Table V. Aerostructures Hardware Ownership

Hardware	Subsystem	System
Aeroshell	Aeroshell	Aerostructures
Chassis	Chassis	Aerostructures
Superstructure and Mounting Points	Chassis	Aerostructures
Lifting Bars	Chassis	Aerostructures
Electronics Enclosures	Chassis	Aerostructures
Battery Enclosures	Chassis	Aerostructures

Delivery Ownership

Table VI. Aerostructures Delivery Ownership

Deliverable	Subsystem	System
CFD Analysis for Aeroshell	Aeroshell	Aerostructures
Manufacturing Process Document	Aeroshell	Aerostructures
FEA Analysis for Chassis	Chassis	Aerostructures
Loading and Unloading Plan	Chassis	Aerostructures
Structural Analysis Validation Program	Chassis	Aerostructures

Electronics Team

Team Description

The Electronics team is responsible for all software, firmware, control hardware and logic on the pod. This includes design, testing, and validation of state machines, PCBs, low/high power battery

circuits, motor controllers, PID controllers, wiring, and pneumatic control systems. The team is also responsible for manufacturing any boards and wiring.

Hardware Ownership

Table VII. Electronics Hardware Ownership

Hardware	Subsystem	System
Batteries	Battery	Electronics
Braking Board	Embedded System	Electronics
Fiducial Board	Embedded System	Electronics
Motor Board	Embedded System	Electronics
Battery Master Board	Embedded System	Electronics
Battery Slave Board (4)	Embedded System	Electronics
Networking Hardware	Embedded System	Electronics
All Sensors/Actuators	Embedded System	Electronics
BeagleBone Black Cape	Interconnects	Electronics

Delivery Ownership

Table VIII. Electronics Delivery Ownership

Deliverable	Subsystem	System
Battery Testing Program	Battery	Electronics
Embedded System High-Level Schematic	Embedded System	Electronics
Wiring Diagram	Embedded System	Electronics
State Diagram	Software	Electronics
Sensor Testing Program	Software	Electronics
State Machine Testing Program	Software	Electronics
Communications Testing Program	Software	Electronics

2. Pod Design

Top-level design summary

The pod is designed to be as small and light as possible to improve competition performance. Initial requirements were set stating that the maximum mass will be 100kg and the maximum length will be 1.75 meters. The low weight stems from material selection that prioritizes aluminum for most components and carbon fiber for the aeroshell.

The pod design allows for easy maintenance and transport with a removable three-piece aeroshell and centralized mounting points on the chassis. The central chassis (shown in Figure 8) provides mounting points and overall structure for the vehicle.

Pod dimensions

Table IX. Overall pod dimensions for each reference axis shown in Figure 2.

X-axis (m)	Y-axis (m)	Z-axis (m)
0.375	0.382	1.75

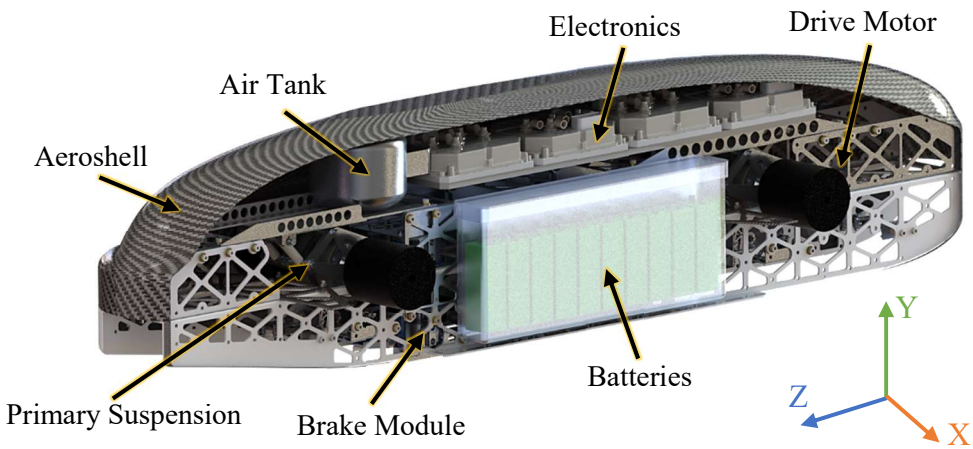

Figure 2. Isometric section schematic of the pod with reference axes and major components labeled. Note the pod will travel in the +Z direction.

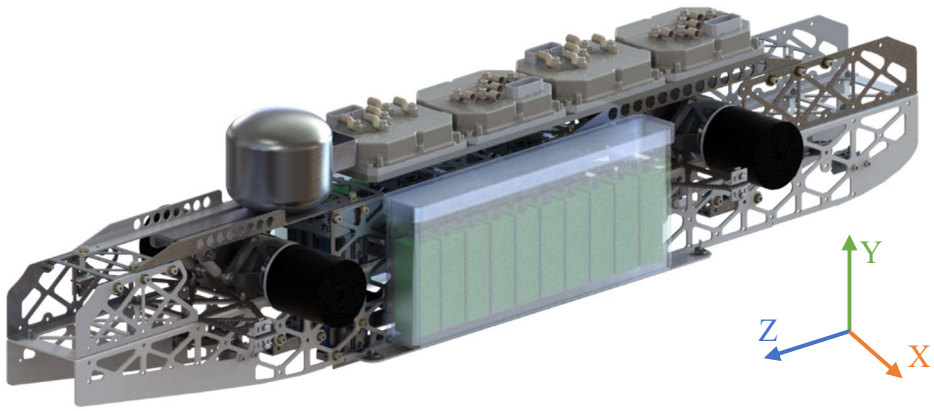

Figure 3. Isometric view of the pod with reference axes shown.

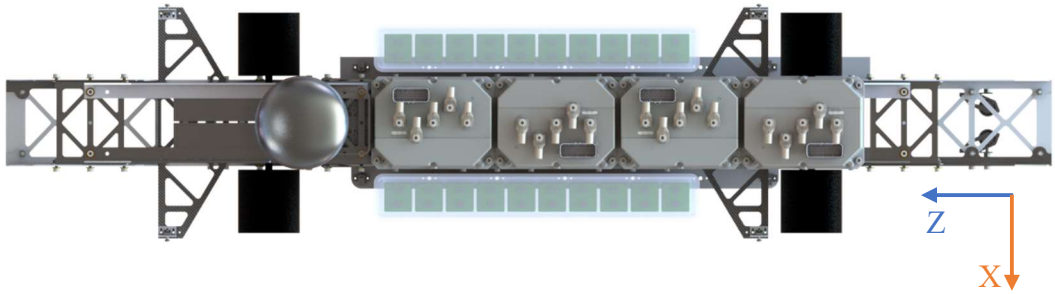

Figure 4. Top down schematic of the pod without the aeroshell.

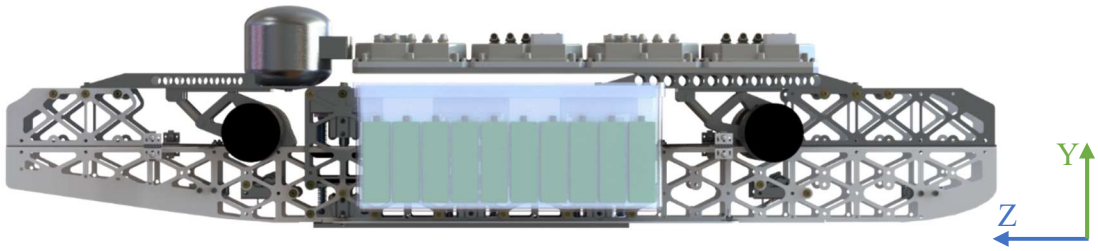

Figure 5. Left side schematic of the pod without the aeroshell.

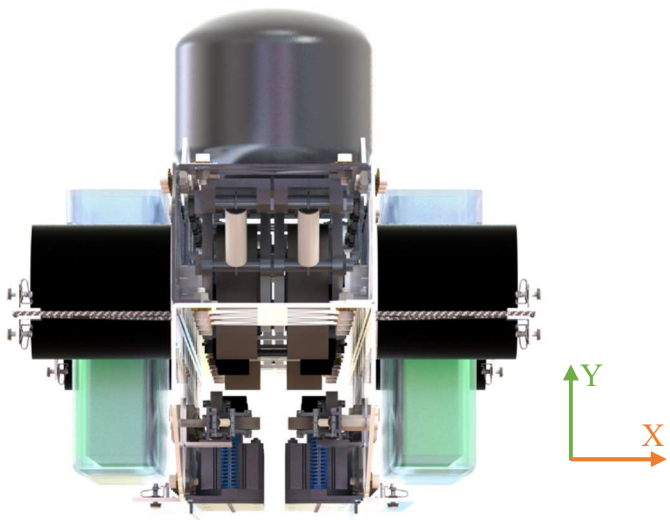

Figure 6. Front view of the pod without the aeroshell.

Pod Mass by Subsystem

Table X. Mass Table

Subsystem	Mass (kg)
Aerostructures	10.9
Propulsion	18.5
Braking and Pneumatics	7.9
Stability	4.5
Power	16.0
Electronics	24.6
Total	**82.4**

Table XI. Electronics subsystem mass table.

Sensor	Total Mass (kg)
Pressure Regulator	5.46
Linear Transducer	0.432
Solenoid	2.722
Air Tank Pressure Transducer	0.113
Rotary Encoder on Flywheel	0.06
Laser Distance Sensor	0.034
IMU	0.0013
Retroreflective Sensor	0.12
Fiducial Microcontroller	0.06
Battery Management System Chips	0.08
Fuse/Pyro Switch	0.24
Temperature Sensor	0.01
Shunt	0.15
Contact Thermistors	0.0003
Battery Contactors	4.16
Motor Controllers	6.8
Microcontrollers	2.4
Master Computer	0.04055
Wireless Communications Module	0.5
Battery Management System Master	0.6
Battery Management System Slave	0.6
Total	**24.58 kg**

Pod Payload Capability

The pod is designed to reach a target speed of 120 m/s with a mass of 82.4 kg. The cutoff for the payload capability has been defined as the amount of mass that can be added to the pod while ensuring the pod reaches a maximum velocity of at least 100 m/s. Figure 7 illustrates how pod maximum velocity decreases as payload mass increases. The model used to generate this graph assumed a constant motor torque of 8.78 Nm per motor during the acceleration phase and a constant 4218 N of braking force during the deceleration phase, but also accounts for drag and transmission inefficiencies. This model was also used to generate the pod's mission profile. To generate Figure 7, the model was applied to various payload masses added to the pod mass of 82.4 kg. As shown in the figure, the pod can carry a maximum of 35 kg before it hits the lower speed limit of 100 m/s, thus the pod's payload capability is 35 kg.

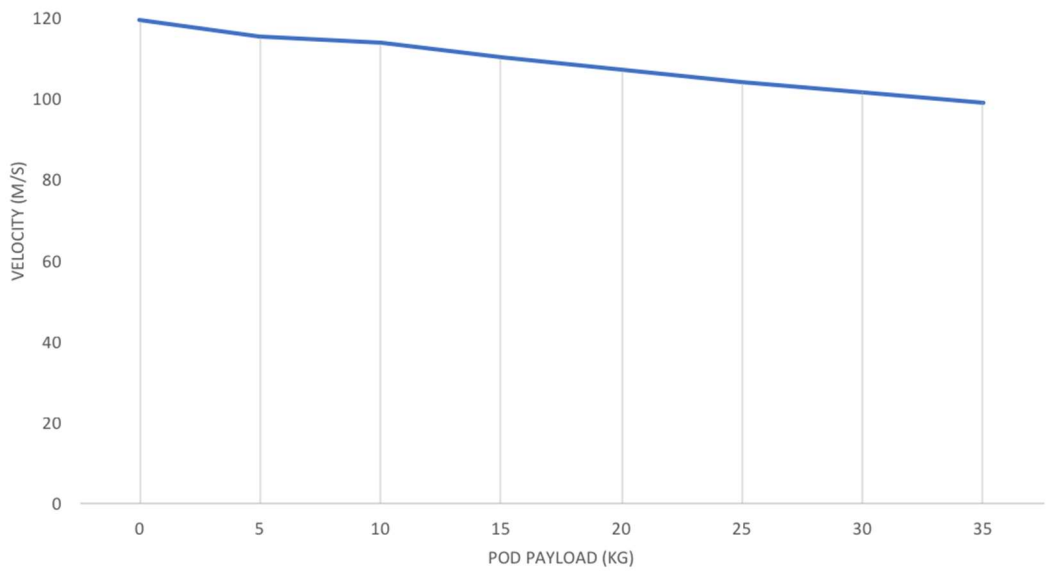

Figure 7. Modeled theoretical velocity as a function of added payload.

Pod materials

Most of the pod will be manufactured using 6000 series aluminum sheet metal. The chassis will be cut from a single aluminum sheet using a water jet and bent into a 3-dimensional shape shown in Figure 2. The aeroshell will be made from carbon fiber using woven prepreg 2x2 twill laid up over an MDF mold. Four layers of 0.254mm carbon fiber fabric will be used. Most mounting hardware such as L-brackets will be off-the-shelf products made of either steel of aluminum. Custom mounting plates will be made of aluminum sheet metal and cut using a waterjet.

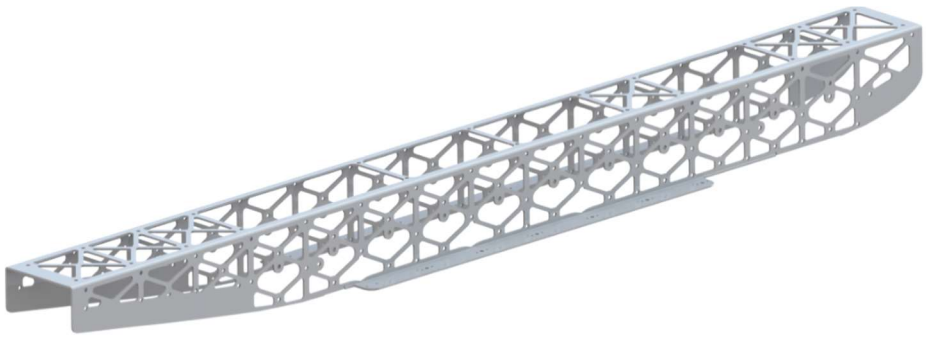

Figure 8. Sheet metal chassis on which most structural elements are fixed.

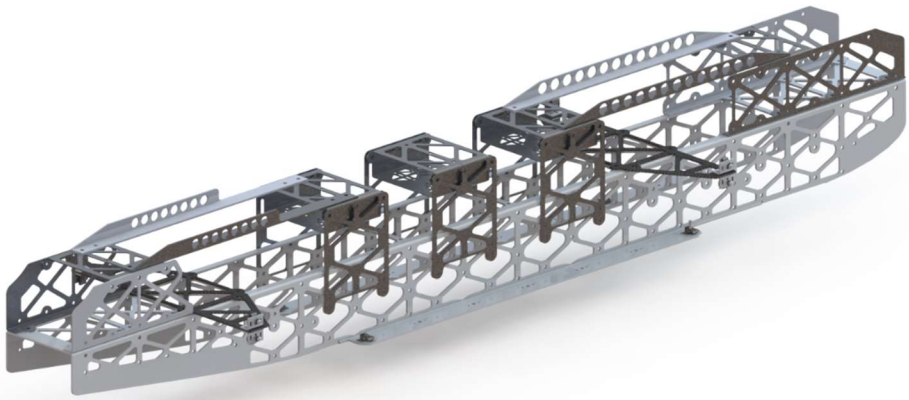

Figure 9. Primary vehicle structures.

Pod power source and consumption

The criteria that are of greatest importance when searching for a high-power system are the specific power and specific energy it can deliver. Given the fact that this power system would have to deliver a relatively high-power burst (peaking at nearly 23 kW) in the nearly 17 second run time, specific power was an even higher priority than the specific energy (capacity). As such, several different types of cylindrical and prismatic batteries were considered; these include lithium-ion, lithium-polymer, nickel cadmium, lead acid, and nickel metal hydride. The four batteries that had the highest specific power (at nominal discharge) were the Pulse module (6S1P), Turnigy module (6S1P), A123 AHP14 Prismatic Pouch and the A123 ANR26650 Cylindrical Cell with specific powers at nearly 8962.73 W/kg, 7648.41 W/kg, 4000 W/kg and 2600 W/kg respectively.

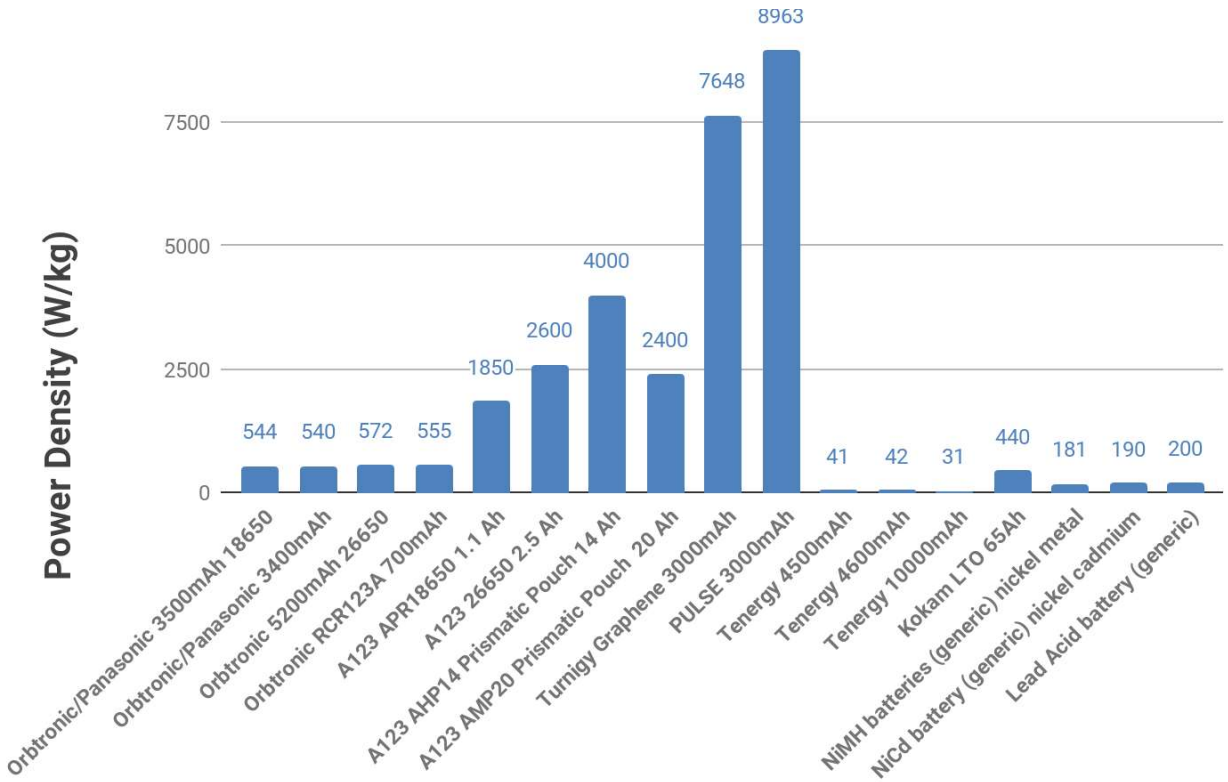

Figure 10. Comparison of candidate battery modules and cells.

Initially, the A123 ANR26650 cylindrical cells were favored, despite having a lower specific power than the other cells, since their greater mechanical rigidity made them less likely to deform than the prismatic cells when undergoing a pressure differential in a near-vacuum environment. Furthermore, a cylindrical cell is designed to expel gas axially through the safety vent in the case that a rapid increase in internal cell pressure occurs, which reduces the potential safety hazard of an uncontrolled rupture as with most prismatic pouches and eliminates the need for pressurized compartments for the cells. Lastly, modules made of cylindrical cells are much more conveniently fitted in tight spaces given the flexibility of how they can be organized.

The ANR26650 cell has a nominal and maximum discharge of 50 A and 120 A respectively, a nominal voltage of 3.3 V, a capacity of 2.5 Ah and weighs 76 g. Now that a cell has been chosen, the next stage is to determine the configuration and amount of the cells that is needed in order to power the motors. Given the parameters shown in Table XII shown below, it was determined that nearly 21.85 kW mechanical power will be outputted by the motor and 23.71 kW of DC power are required to be inputted to the controller (given the efficiency of the motor and the motor drive). From there, an iterative process was performed to find the appropriate discharge current required given the commensurate power loss that occurs due to internal impedance inherent to the battery setup and the ANR26650 cell (6 mOhms per cell). To satisfy a motor's power requirements, a

battery module will need to output 126 V at 194 A (taking into account impedance losses); a 39S3P configuration can comfortably meet these parameters.

After more carefully considering the degree of rigor involved with testing, manually spot welding, and assembling 117 cells (468 cells total for four battery modules) with a relatively tight deadline, it was decided that a higher capacity cell was necessary. Thus, attention was directed towards the Pulse and Turnigy modules. Although the Turnigy module is heavier than the Pulse module, Turnigy's batteries come with 10 AWG wires and XT90 discharge plugs as opposed to Pulse's 12 AWG wires and XT60 plugs. Thus, Turnigy's modules have been preferred until discharge testing can commence and it can be shown that the 12 AWG wires in the Pulse modules can withstand a discharge of 195 A to be conservative, at a maximum battery voltage of 126 V (roughly 3.25 kW of power is lost per module due to the modules' 18 mOhm IR, leaving approximately 21.15 kW to the controller).

Assuming the total wire length per module is approximately 20 cm, the 10 AWG wires standard with the Turnigy modules can withstand 195 A with less than predicted 2% losses from the cables connecting the modules without exceeding 80 C with a maximum cable temperature rating of 200 C (SOURCE). However, power losses and significant heating are still expected to take place at the connectors even with Turnigy's XT90 plugs. Thus, it is planned to replace the XT90 plugs with the XT150 plugs, which can withstand 150 A nominally, and are much less likely to dangerously overheat at 195 A for the projected 17 seconds runtime (this is conservative considering that the battery is projected to output at its peak for only a portion of that time).

The Turnigy Graphene 3000 mAh 6S 75C module are lithium-polymer (LiPo) based batteries which can output 225 A constantly during discharge and a burst of 450 A (this is of course only considering the actual module without the attached cables/connectors). The module is composed of 6 LiPo prismatic cells in a 6S1P configuration; each cell with 3.7 V nominally and 4.2 V maximum; thus, a single module has 22.2 V nominal and 25.2 V maximum. If the modules are placed in a 5S1P configuration (considering a module of cells as a single unit), a single battery module that would power one motor would have 111 V nominal and 126 V maximum. Assuming a constant discharge of 195 A, and a total battery capacity of 3000 mAh, the battery would reach its cutoff voltage of 99 V (assuming 3.3 V recommended cutoff for LiPo cells) in approximately 56.8 seconds. This provides ample room for a 17 second runtime (assuming the entirety of the run takes place at 195 A discharge continuously). Thus, the pod's high-power battery system will have a nominal discharge of 195 A, 21.65 kW, and a projected peak power output of 23.80 kW (however, the module is capable of outputting a burst of 38.48 kW at 450 A).

Furthermore, since LiPo batteries, particularly prismatic pouches, are known to swell when placed in a low-pressure environment, each battery module will be secured in pressurized containers (pressurized to 1 atm).

The thermal profile of the battery system can be modelled using Equation 1.

Equation 1. Reference equation for battery thermal profile.

$$mc_{cell}\frac{dT_{cell}}{dt} = I^2R + T_{cell}\Delta S\frac{I}{nF} + Ah(T_{cell} - T_{amb})$$

where m is the mass of the cell, c_{cell} is the specific heat capacity of the cell, T_{cell} is the temperature of the cell, ΔS is the entropy change, F is Faraday's constant, n is the charge number specific to the process (n=1 for lithium-ion based batteries), A is the surface area of a cell, h is the convective heat transfer coefficient, and T_{amb} is the ambient temperature. As shown, the thermal profile of a cell can be modelled by heat produced by the internal impedance of the cell, the change of entropy in the cell during discharge, and the convective heat transfer. Neglecting convective heat transfer and assuming lumped capacitance for each cell (uniform temperature gradient in cell), it was found that each Turnigy 6S module will have a maximum projected temperature increase of nearly 11.87 C. Thus, if the initial cell temperature is 25 C, the battery will likely not exceed 36.87 C assuming a 195 A constant discharge for 14 seconds and a cell IR of 18 mOhm. This is within the cells maximum operating temperature of 52 C. Furthermore, it is important to note that this estimate is conservative as it assumes that the cell is discharging at peak current for the entirety of the run. A battery management system (BMS) will be used to monitor the status of each battery module (temperature and state of charge). Still, a thermal cooling system is still going to be installed to mitigate heat from the cables and connectors. The pod's lower-power systems will be powered using 4-ANR26650 cells in a 4S1p configuration.

A total of 30 Turnigy 6S modules will undergo testing to verify their capacities using the West Mountain 1000-Watt Computerized Battery Analyzer. Each module will be tested at a 1000 W output (40 A discharge); each module will take approximately 4.5 minutes to completely discharge. The objective of these tests will be to ensure that any modules that are outliers with respect to their discharge are eliminated from selection and that the 20 module that are selected for pod's high-power system have as much as possible matching capacities.

Additionally, using the same CBA 1000 W system, a number of individual 4.2 V cells (extracted from the Turnigy 6S module) will be tested at 75 C discharge (225 A). The objective of these tests is to verify the battery's high discharge performance and to observe the temperature profile of the cells under such conditions. Additionally, some cells will be discharged in low-pressure conditions in order to determine whether the cells can operate at high discharge in lower than 1 atm conditions.

Table XII. High power consumption components.

High Power Consumption Specifications	
Peak Battery Power (Discharge)	23.80 kW (75 C)
Nominal Battery Power (Discharge)	21.65 kW (65 C)
Peak Motor Output Mechanical Power	22.31 kW
Peak Motor DC Power Input	23.47 kW
Peak Motor Voltage	126 V_{DC}
Actual Peak Battery Output (Ignoring Impedance Losses)	28.35 kW
Motor Power Factor	0.816

High Power Consumption Specifications	
Motor Efficiency	0.95
Drive Efficiency	0.97

Table XIII. Low power consumption components.

Component	Total Power Requirement (Watts)
Braking	
Pressure Regulator	120
Linear Transducer	12
Solenoid	
Air tank Pressure Transducer	0.6
Fiducial Module	
Rotary Encoder on Flywheel	0.4675
Laser Distance Sensor	0.51
IMU	0.1815
Retroreflective Sensor	0.0046
Fiducial Microcontroller	
Battery Management	
Battery Management System Chips	12.672
Fuse/Pyro Switch	8.5
Temperature Sensor	0.072
Shunt	15
Insulation Monitoring	2
Battery Contactors	48
Propulsion	
Motor Controllers	48
General Electronics	
Microcontrollers	8
Master Computer	5
Wireless Communications Module	6.5
Contact Thermistors	1.25
HV-Chassis/LV-Chassis fault detection system	0.002
Total Power Requirement (Watts)	288.76

Pod state diagram

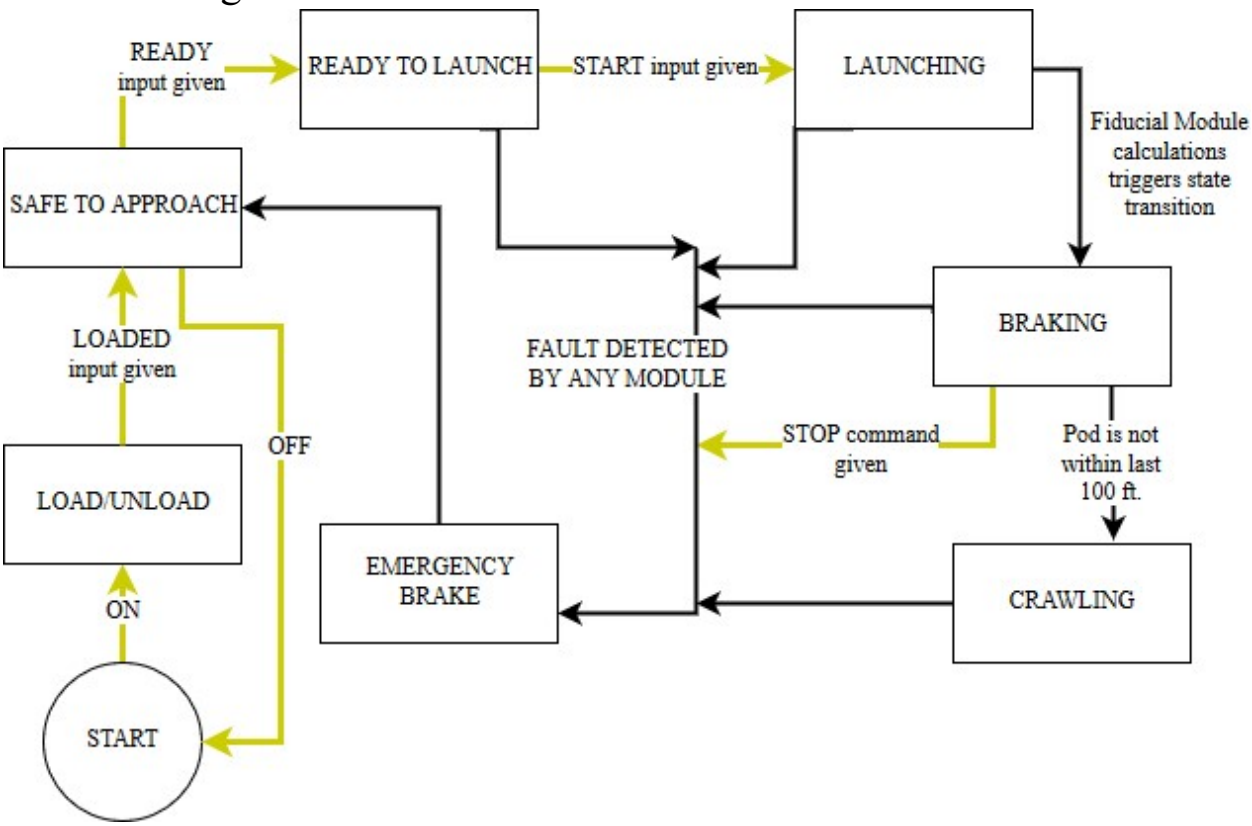

Figure 11. Overall pod state diagram.

Table XIV. High power consumption components.

State	High Power	Low Power	Brakes	Motor
OFF	OFF	OFF	ON	0
LOAD/UNLOAD	OFF	ON	OFF	0
SAFE TO APPROACH	OFF	ON	ON	0
READY TO LAUNCH	ON	ON	OFF	0
LAUNCHING	ON	ON	OFF	0 to 100%
BRAKING	ON	ON	ON	100 to 0%
CRAWLING	ON	ON	OFF	0 to 5%
EMERGENCY BRAKE	OFF	ON	ON	0

An Ideal Run:

1. OFF

The Pod starts off in the OFF state, where the power is OFF, and the brakes are fully applied. The brakes are applied since the air pressure tank is used to release the brakes from the track. Since the power is off, no pressure can be delivered to release the brakes and therefore the brakes are turned on by default.

2. LOAD/UNLOAD

In the LOAD/UNLOAD state, there is power for all the sensors, and the brakes are lifted. Since the brakes aren't being applied, the pod can be freely moved along the track, making loading and unloading easy. In this state, the sensors are powered on and they begin taking data. After the pod is loaded, the input LOADED moves to the next state.

3. SAFE TO APPROACH

Therefore, the pod is situated on the track, with the motor's power being supplied, but the motor not having any thrust yet. The pod is still at rest, and brakes are fully applied, making it safe to approach the pod.

Before going forward to the next state, the READY input must be given. If any of the Modules (Braking Controller, Motor Interface, Fiducial, or Battery) detect a fault, then the pod immediately transitions to Emergency Brake.

4. READY TO LAUNCH

As the pod gets ready to launch, the brakes are disengaged. This makes sure that the pod doesn't accelerate and brake and the same time.

While all this is happening, the computer asks the user to input a throttle percentage to apply to the motor. 0% meaning no thrust, and 100% as the motor working at full capacity.

The pod only goes onto the LAUNCHING state if all the Ready to Launch Conditions are met. If any of them have a fault, then the pod moves directly into EMERGENCY BRAKE. Also, the START or GO user input must be given to transition into LAUNCHING.

5. LAUNCHING

The pod is launching and accelerating. The motors are working at full capacity and brakes are disengaged. The Fiducial Module keeps track of the distance to travel in this state and triggers the transition to the BRAKING state. All modules are monitoring for Warnings and Faults, and any Fault causes the pod to immediately transition to EMERGENCY BRAKE.

6. BRAKING

During the BRAKING state, the brakes are being fully engaged. The pod slows down from its top speed to a stop.

Modules track Warnings and Faults, and the pod goes directly to EMERGENCY BRAKE if any faults are detected.

At the end of this state, if the position of the pod isn't within the last 100 ft, then the pod goes into the CRAWLING state.

7. CRAWLING

This is an (optional) state where the Pod moves forward at a slow speed to reach the last 100 ft of the track. After the pod reaches the last 100 feet, the Fiducial Module will trigger a Fault, and the pod will move directly to EMERGENCY BRAKE.

Any other Faults within this state will lead to EMERGENCY BRAKE.

8. EMERGENCY BRAKE

This is the state that the pod transitions to if any of the modules ever detect a fault. If there were no faults encountered during the entire run, then the Pod can transition here directly after the BRAKING state if the pod is within the last 100 ft at the end of the BRAKING. If not, then the pod will transition here after the CRAWLING state reaches the last 100 ft. Another way to transition to this state is to give the STOP input at the LAUNCHING, BRAKING, or CRAWLING states to immediately transition to EMERGENCY_BRAKE.

In this state, the Brakes are fully applied until the pod is at rest. Once the pod is at rest, the pod transitions to SAFE TO APPROACH.

Pod navigation mechanism

The Pod navigation mechanism is how the Fiducial Module takes its data and interprets it to determine Pod States and other transitions.

The distance is determined travelled by using the Flywheel Rotary Encoder as the primary distance calculator and using the Retroreflective System as a backup. Although these methods of calculation act independently in their collection of data, the values are compared to make sure that both our data points agree with each other.

The distance travelled calculated by the Flywheel rotary encoder is used to calibrate the Retro-reflective sensors, and vice versa. For example, if the rotary encoder and retro-reflective Stripe Count match in their distance calculations, then the pod is performing correctly. However, if the rotary encoder continues to increase past the next expected retro reflective strips, but the Stripe Count doesn't increase, the sensors missed one of the stripes, and the stripe count is recalibrated. Any time a recalibration happens, a Warning Signal is sent. If the recalibration happens twice in a row, or three times in total, then the pod is sent directly to Emergency Fault, or if the retroreflective sensors differ from the rotary encoder by more than 200-250 feet, then the pod is sent directly to FAULT.

The velocity of the pod is calculated by the freewheel rotary encoder velocity. The motor encoder velocity is expected to be higher than the free wheel rotary encoder, due to slippage. The velocity

of the pod is expected to be 0 during the Safe to Approach and the Ready to Launch States, and this velocity is used to determine if any Warnings and Faults happen. If the flywheel rotary encoder velocity differs from the motor encoder velocity, then a Warning or a Fault is sent out depending on the severity of the difference.

The Acceleration of the pod is calculated using the onboard Inertial Measurement Unit and the second derivative of the freewheel encoder data. Warnings and Faults come from a large deviation between the data between the two accelerations.

Keeping track of the Stripe Count is not trivial, since the pod will be traveling at a high speed, and therefore need a sensor with a high sampling frequency. Our Retroreflective sensors have a sampling frequency of 5000 Hz, and will make multiple readings for one strip of tape. Based on how this sampling works, some of the results will have a higher response amplitude than the other responses (due to physical distance to the strip at the time of sampling). By comparing our time elapsed, the amplitudes of the responses, and the current state, the data will be fitted to a predetermined model to help combat against false positives by the sensor. The stripe count will be compared with the position determined by the flywheel rotary encoder to help correct for any false negatives.

The distance from the end of the pod is used to determine when the pod is within the last 100 ft of the track. The data for this comes from the Laser Distance Sensor, and this data is used only in the Crawling State or the Braking State, to measure the distance from the end. Pod Transitions are not reliant on this, unless a Fault is encountered. Possible faults from this data, is if the sensor is disconnected, or if the data given by this sensor is off from the stripe count or the encoder data for position by a significant amount.

In total, the navigation system functions by comparing real world empirical values to predetermined prediction models, in order to make sure the pod is performing as expected. If any of our data values begins to diverge from the prediction model a significant amount, an Emergency Fault is automatically triggered, and the Pod is stopped.

Pod Propulsion Mechanism

Table VI. Propulsion system operating parameters.

Propulsion Overview	
Maximum Pod Velocity (m/s)	130.9
Torque Per Motor (Nm)	8.78
Pod Acceleration (g)	0.74
KV	200
Peak Mechanical Power (kW)	22.3
Continuous Mechanical Power (kW)	11.15
Motor Efficiency	0.95
Wheel Diameter (cm)	10

Overview

The pod will be propelled by four TP-100 BLDC motors, shown in Figure 13, each direct driving a 10 cm diameter wheel. The motors are rated for rotational velocities up to 25000 RPM, which allows for a theoretical maximum pod velocity of 130.9 m/s. Each motor will apply a constant torque of 8.78 Nm to each wheel, which results in a pod acceleration of 0.74 g. The motors will have a KV of 200 and a peak mechanical power output of 22.3 kW, which is reached briefly towards the end of the 16 second acceleration phase. Four Emsiso emDrive 150 motor controllers, one for each motor, will be used to control each motor. The body of the motor will be mounted to the stability rocker that houses each driven wheel, with the motor shaft attached to the wheel. All four driven wheels will be applied to the top side of the track, with two on the forward end of the pod and two on the aft end. The driven wheels will be composed of an aluminum rim surrounded by a 0.26 cm polyurethane lining that will contact the track.

Figure 12. TP-100 BLDC motor.

Reasoning

A single EMRAX motor with a belt drive was originally considered for the motor because it was hypothesized that using a single motor would be less complex and less massive than using multiple. However, four TP-100 motors were ultimately chosen because their max RPM of 25000 meant that the wheels only had to be a reasonable 10 cm in diameter to support direct drive at speeds up to 130 m/s, and these motors can deliver up to 23 kW of power while weighing less than 3 kg each. This direct-drive system is ideal because it eliminates the mass and manufacturing complexity of a belt drive while increasing transmission efficiency.

The driven wheels will contact the top side of the track because having the weight of the pod applied to them will increase the traction between those wheels and the track. The wheels' polyurethane lining, with a coefficient of friction of 0.76, also improves traction, while the aluminum rim improves durability.

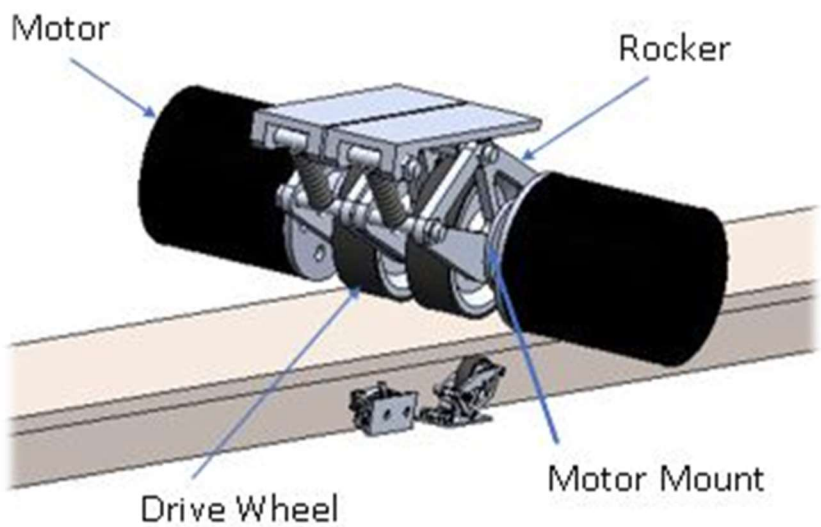

Figure 13. Drive motor, wheel, and suspension system.

Pod Braking Mechanism

Table VII. Brake system operating parameters.

Braking Overview	
Operating Pressure (MPa)	0.758
Total Braking Force (N)	4218
Braking Force Per Brake (N)	351.50
Coefficient of Friction	0.55
Spring Constant (N/m)	69
Maximum Clearance from Track (mm)	6.35
Pressure Vessel (MPa)	1.00

Overview

The pod's braking mechanism consists of a total of 12 brake units: four located at the front end of the pod, four located near the center, and four located at the aft end. The brakes will be applied to the flange of the track I-beam, with six of the units applied to the top of the flange, and the other six mirrored about the flange (shown in figure 13), applying force to the bottom face. Each unit is a pneumatic-released, spring-applied system consisting of a 38.1 mm bore pneumatic cylinder, two heavy-duty springs, and a non-asbestos organic brake pad with a coefficient of friction of 0.55 as shown in Figure 12. When a pressure of 0.758 MPa is maintained in the cylinders, the brakes are released, and when the air is expelled from the cylinder and the pressure drops to zero, the brakes apply their maximum braking force of 351.5 N each, or 4218 N when totaling all 12 units. This results in a maximum deceleration of about 5 g.

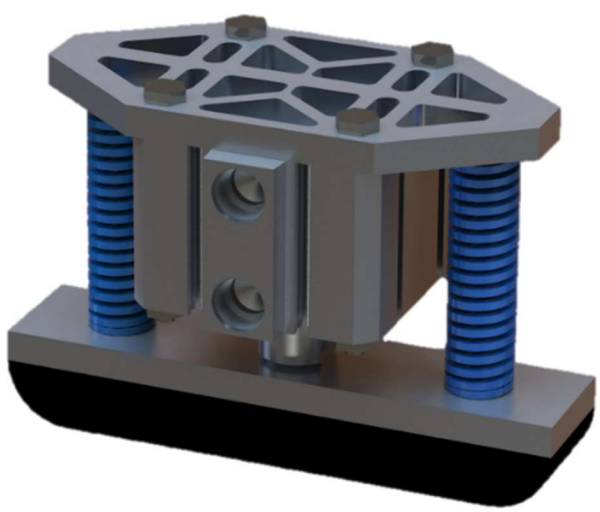

Figure 14: CAD rendering of the braking subassembly.

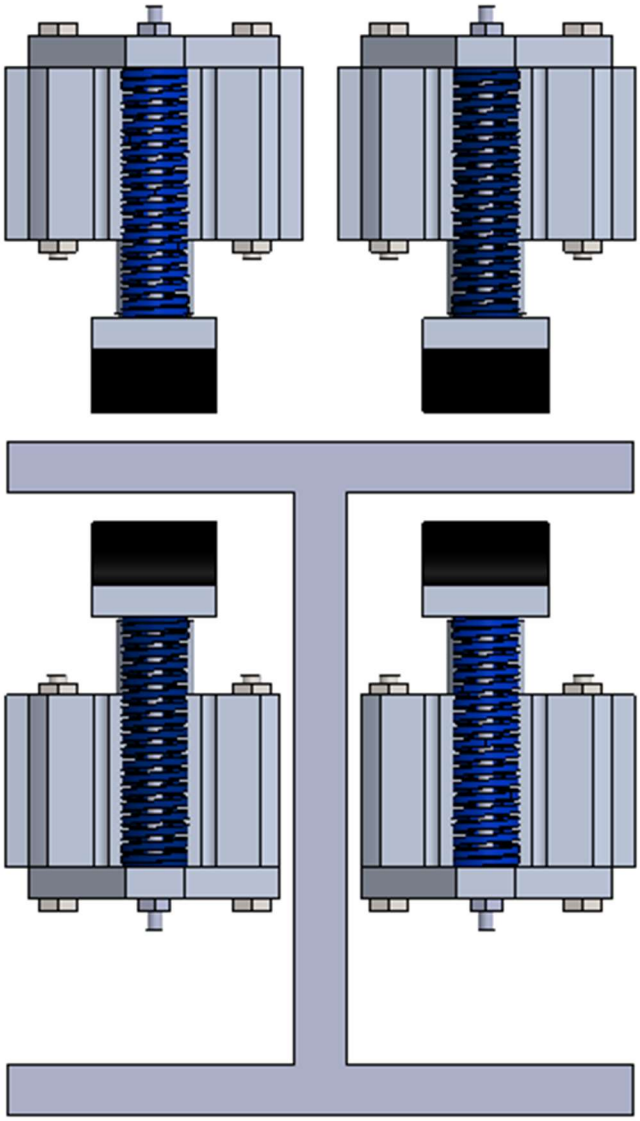

Figure 15. Front view of brake pad arrangement with the track shown.

Pneumatic Operations

Air pressure will be supplied to the brake cylinders by a 1.9 L air tank to be pressurized to 1 MPa before the pod is loaded onto the track. A pressure regulator will control the braking force by venting air to decrease cylinder pressure as needed, which in turn leads to an increase in braking force. The regulator will also maintain the desired internal pressure during all stages of the pod's operation. In the case of a failure, such as power loss, an emergency solenoid valve will automatically open, releasing pressure and fully applying the brakes.

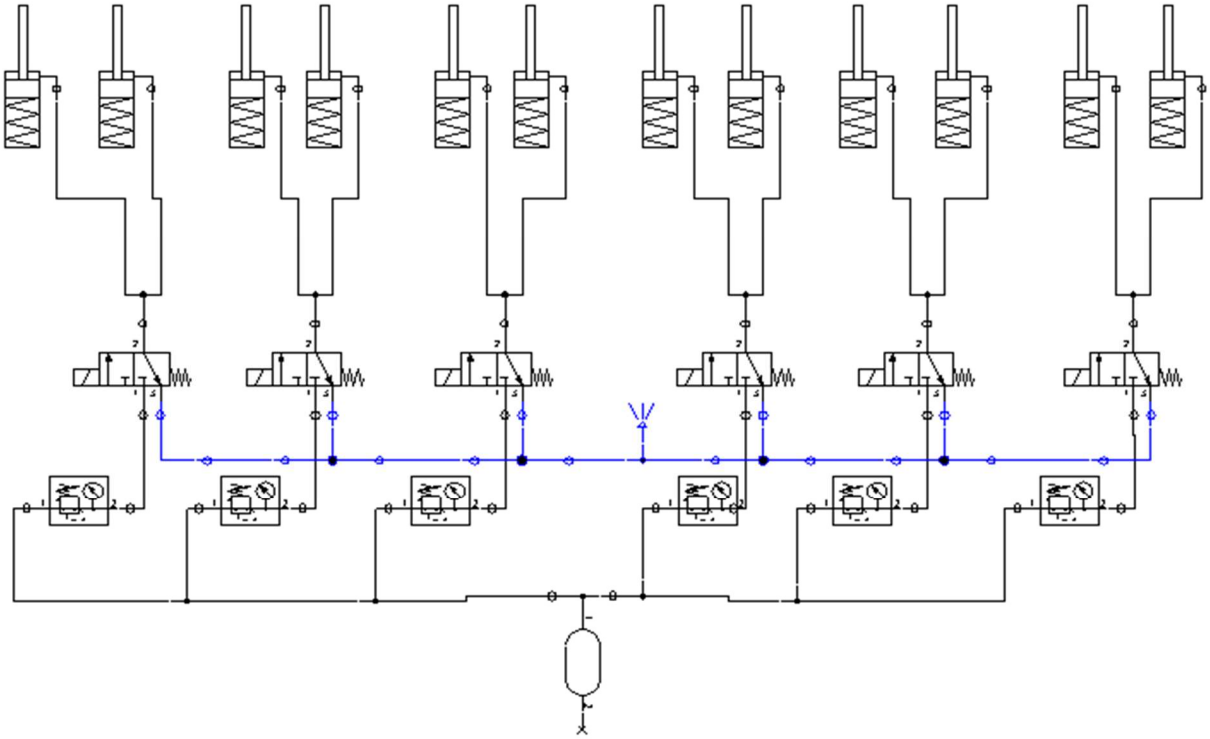

Figure 16. Pneumatic diagram.

Pneumatic Design Reasoning

A pneumatic-released, spring-applied system was chosen because it is a fail-safe system. Since the cylinders need to be pressurized to release the brakes, if a failure such as a loss of power or loss of pressure occurs, the brakes will automatically apply full braking force and bring the pod to a complete stop as soon as possible. Non-asbestos organic brake pads were chosen because their lower hardness reduces the risk of damaging the track, unlike metallic brake pads. These brake pads will also have a rounded leading edge so that they can handle bumps and discontinuities in the track. The quantity 12 was chosen for the brakes because this allows more compact pneumatic cylinders to be used, heat to be more evenly dissipated, and a lower operating pressure to be used. The width of the brake pads was chosen because of the limited space underneath the track and to account for any lateral translations the pod might experience. The depth of the brake pads was chosen due to the wear rate of the braking material. The depth of the brake pads is also an overestimation as of now and will be adjusted after testing the braking system on the planned test rig detailed under the testing section. The length of the brake pads was chosen to better help offset the thermal distribution from the center of the brake pads and to accommodate the two springs each cylinder will have on its sides.

Pod Stability Mechanisms

The pod's stability system consists of two subsystems: the lateral stability subsystem and the vertical stability subsystem. Both systems consist of aluminum rockers with wheels on one end and a spring on the other. For the lateral stability system, two pairs of rockers are used: one pair of rockers on either side of the web of the track at the front end of the pod, and another pair at the aft end of the pod. These rockers will supply the lateral forces needed to guide the pod down the track and will dampen vibrations in the lateral direction.

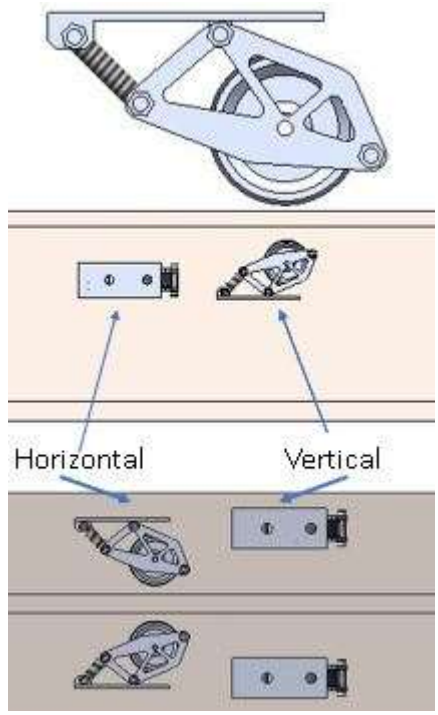

Figure 17. Horizontal and vertical stability systems.

The vertical stability system consists of a pair of rockers for each of the eight wheels driven by the motors. The wheels of these rockers contact either side of the flange of the track I-beam, and the springs on these rockers will dampen vertical vibrations resulting from bumps and track discontinuities. The motors will be mounted to the larger rockers on the top side of the track so that there is no relative motion between the motors and the driven wheels. A spring constant of 50 kN/m has been selected due to the results of the vibration model, discussed in a later section.

A rocker design was selected because it provides a way for springs to be attached to the wheels in a symmetrical and compact way. Aluminum was chosen for the rocker material due to its low weight and high durability, which are critical considering the rapid movements and impacts that the rockers will endure during the pod's run.

Vehicle Aerodynamics

Aeroshell Design

The aeroshell is designed with a small amount of upward curvature near the edges to mitigate vortex formation downstream of the vehicle. It is slowly tapered at the back to ensure minimal flow separation and reduce drag. The frontal cross-sectional area is intentionally minimized to reduce drag and mitigate any Kantrowitz limit effects, as discussed in the Kantrowitz limit and analytical CFD validation section.

The shell is split into three parts: an upper shell, and two lower shells on either side of the track. Each shell is attached to the aeroshell mounting brackets using four M6 DZUS quarter-turn fasteners. The original CAD model of the upper shell is a parametric loft of four elliptical sections with about one meter of straight flat mounting space on the sides, and a small flat section at the top. Each lower shell has a small flat section at the bottom for mounting, and flat mounting space on the sides in the same axial locations as the upper shell.

Figure 18. Isometric view of the upper aeroshell.

Figure 19. Isometric view of the left lower shell.

Computational Fluid Dynamics (CFD) Analysis

A viscous steady-state density-based analysis was conducted for the exterior profile of the pod in ANSYS Workbench 18.2 using the Fluent analysis package. The simulation uses a Spalart-Allmaras turbulence model to approximate large eddies in the flow surrounding the aeroshell. Using this turbulence model also approximates any flow separation at the tail end of the vehicle reasonably well.

The geometry is a solid profile of the vehicle's aeroshell, an approximation made to greatly reduce the mesh requirements and computation time of the simulation. Modeling was attempted using a thin shell with the underlying primary structure, but convergence was difficult to achieve due to a memory shortage on Georgia Tech's virtual machines requiring our mesh not to exceed about 1,000,000 elements. A grid convergence study was performed to ensure the 500,325-element mesh used was sufficient for approximating vehicle drag. The aerodynamic coefficients appear to have converged to within about 2% error at around 500,000 mesh elements.

Table XV. Grid convergence study performed in ANSYS Fluent.

Number of Elements	Cd	Drag (N)	Cl	Lift (N)
396370	0.162	164.90	0.090	91.63
500325	0.147	156.60	0.040	45.92
660653	0.145	148.42	0.041	47.92
981468	0.146	150.54	0.039	44.07

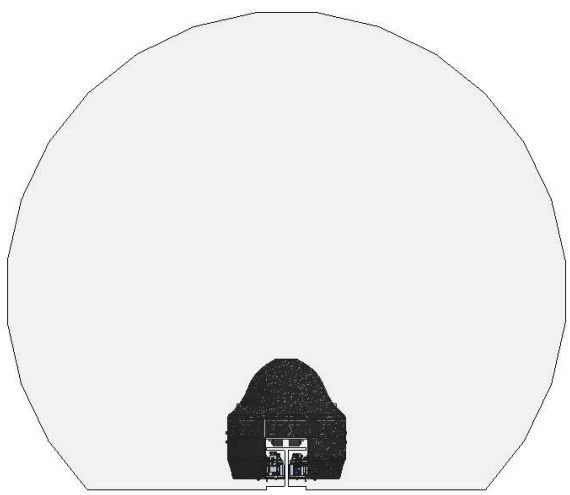

Figure 20. Section view of the track and tunnel geometry used for fluids analysis.

Meshing was conducted using ANSYS Workbench's built in meshing tool, with a structured inflation layer 12 mesh elements deep around the aeroshell, track, and tunnel walls. The rest of the mesh is unstructured, as the aeroshell is a complex shape; making the creation of an entirely structured mesh impractical. The track and tunnel are approximated using the geometry shown in Figure 20.

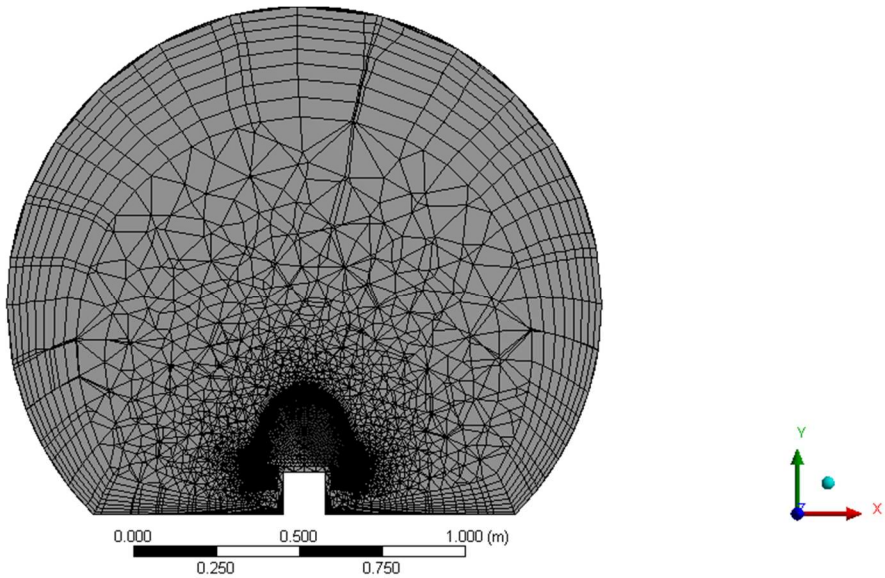

Figure 21. Front view of the 500,325-element hybrid mesh created for aerodynamic performance simulation.

Solution parameters are shown in Table XVI. The simulation converged within 847 iterations using a maximum residual criterion of 10^{-3}. The solution was calculated using an implicit formulation, as explicit formulations were always unstable in a survey of different solution methods.

Table XVI. CFD simulation parameters.

Simulation Parameters	
Turbulence Model	Vorticity-based Spalart-Allamaras
Operating Pressure (Pa)	100000
Total Temperature (K)	310
Inlet Velocity (m/s)	150.3
Inlet Pressure (Pa)	1380
Freestream Mach #	0.441

Table XVII. Aerodynamic results of the vehicle CFD simulation.

Aerodynamic Results	Value
Coefficient of Drag	**0.147**
Coefficient of Lift	**0.0401**
Tested Density (kg/m)	1.110

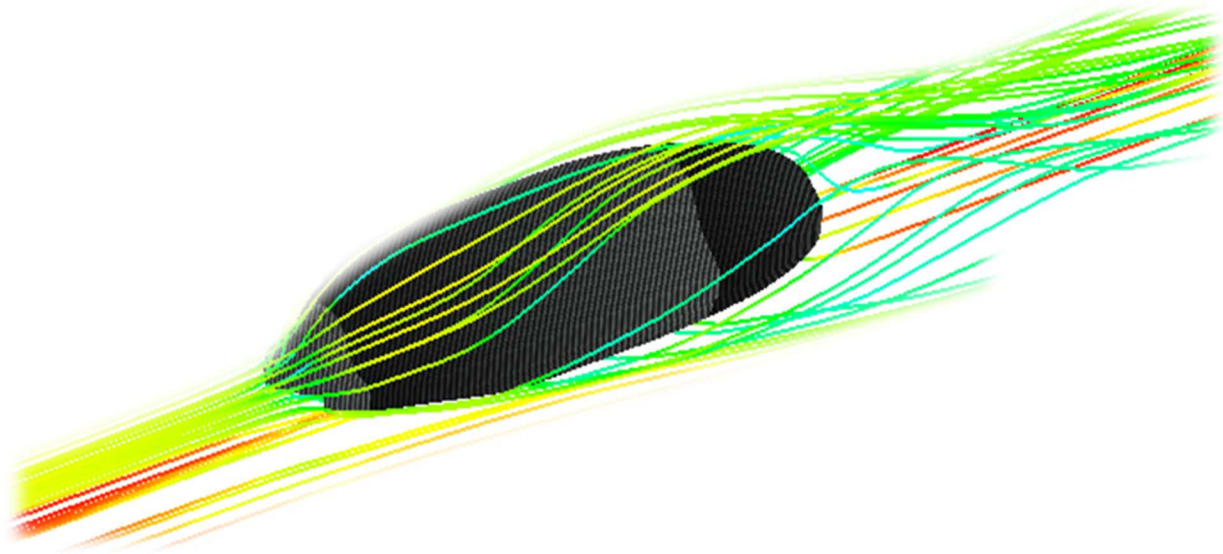

Figure 22. Velocity streamlines around the aeroshell.

Kantrowitz limit and analytical CFD validation

Only one small oblique shock is present in the CFD model after a thorough analysis of density and temperature gradients near the vehicle. The top half of the shell and bottom edges were found to be free of oblique shocks. The single oblique shock is shown in Figure 23.

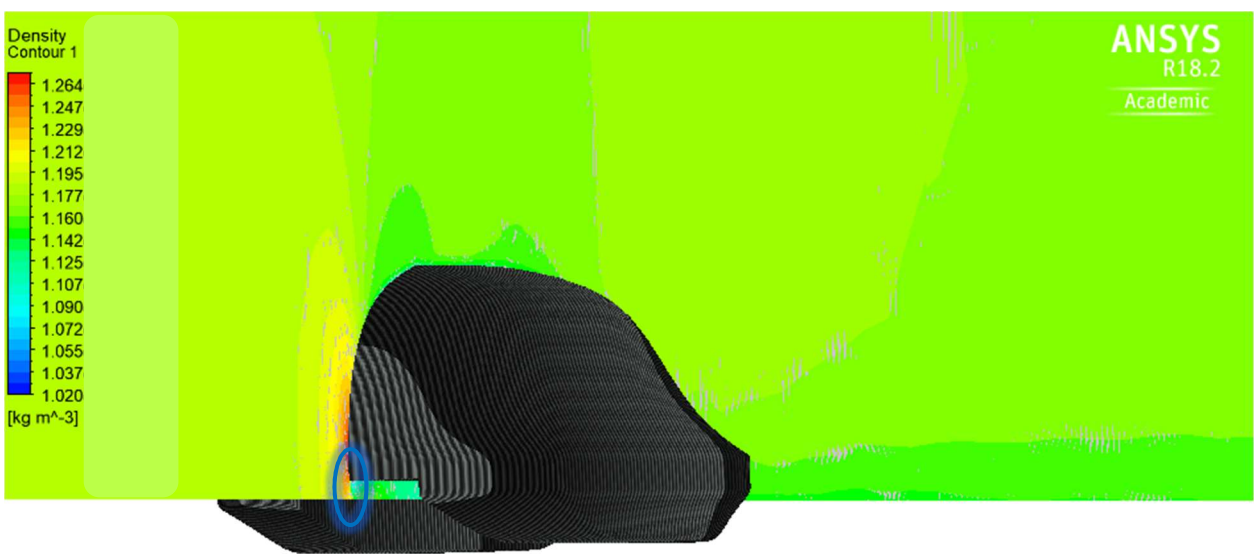

Figure 23. Density contour at the midplane of the aeroshell above the track. Note the large gradient under the front edge of the shell (circled in blue); likely indicative of an oblique shock.

This CFD result was validated by finding a numerical solution to Equation 2. This equation is derived in Elon Musk's "Hyperloop Alpha" publication by using isentropic relations and can be solved for the Mach number at which shocks will certainly become present.

Equation 2. Mach number at which shocks become present due to insufficient bypass area.

$$\frac{A_{bypass}}{A_{tube}} = \left[\frac{\gamma-1}{\gamma+1}\right]^{\frac{1}{2}} \left[\frac{2\gamma}{\gamma+1}\right]^{\frac{1}{\gamma-1}} \left[1+\frac{2}{\gamma-1}\frac{1}{M^2}\right]^{\frac{1}{2}} \left[1-\frac{\gamma-1}{2\gamma}\frac{1}{M^2}\right]^{\frac{1}{\gamma-1}}$$

The air bypass to tube ratio is 0.9676, and γ is assumed to be 1.4. Using this equation, the critical Mach number was calculated to be 0.835, well below the vehicle's tested Mach number of 0.441. This is consistent with the lack of shocks present on the upper half of the shell, yet a shock is still seen between the bottom of the upper shell and the top of the track. This is because of the geometric approximation made for the sake of the simulation. In reality, the pod will have spaces in the chassis structure to allow for ventilation and cooling inside the vehicle. This will allow the air directly behind the shell to expand into a much larger volume, which reduces the density gradient on the lower front edge; most likely eliminating that oblique shock altogether. Improved computational resources would be necessary to run a more geometrically complex simulation, something which the team plans on doing in the future to further pin down vehicle drag estimates.

Predicted Pod Thermal Profile

To generate a pod thermal profile, a thermal analysis was performed on each component judged to be at risk for overheating during the pod run. These components are the batteries, brakes, and motors. The expected thermal profile for the batteries is discussed in the pod power source section.

For the brakes, a transient thermal analysis in ANSYS was performed. This analysis assumes that the pod brakes at a constant 4218 N from the expected max pod velocity until the pod comes to rest after 2.5 seconds of braking time, and that all of the pod's kinetic energy is transferred into heat energy applied to the contact surface between the brake pad and the track. Under these conditions, the expected max temperature each brake will experience is 220.15 °C around the bottom center of the brake pad, which is about 95 °C less than the brake pads' maximum temperature rating of 315 °C.

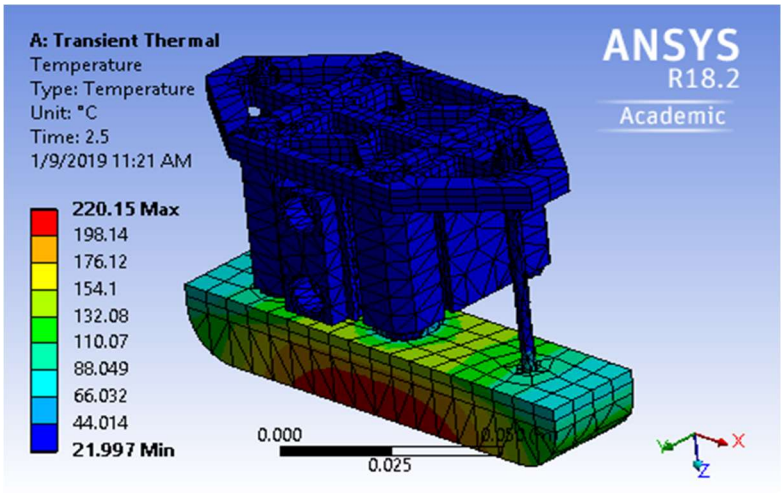

Figure 24. Brake pad thermal model, top isometric view.

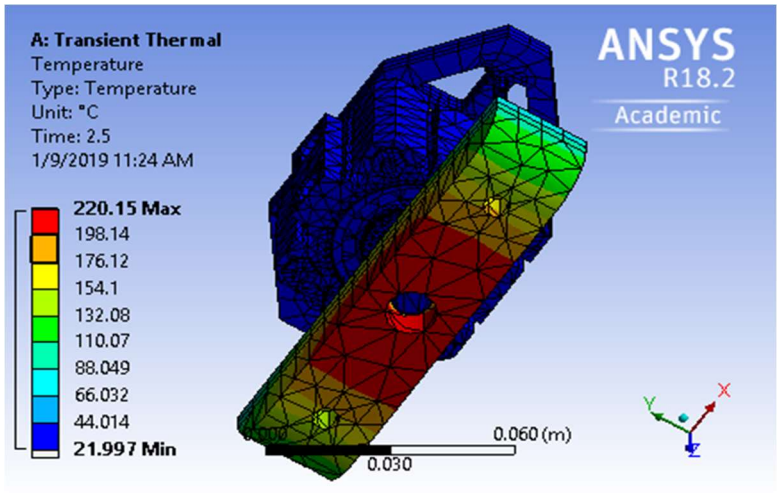

Figure 25. Brake pad thermal model, bottom isometric view.

For the motors, transient thermal analysis was performed by applying an internal heat generation load to the motor. This simulation assumes that the motor runs for twice the planned duration of the acceleration phase, and that the motor reaches a peak power twice its rated value. This is far greater strain than would realistically be placed on the motor during the pod's competition runs. The value for heat power generated by the motor assumes a motor inefficiency of 4%, which the manufacturer lists as the worst-case efficiency. In this simulation, the body of the motor reaches a maximum temperature of 37.95 C, which is well within the motor's operating limits.

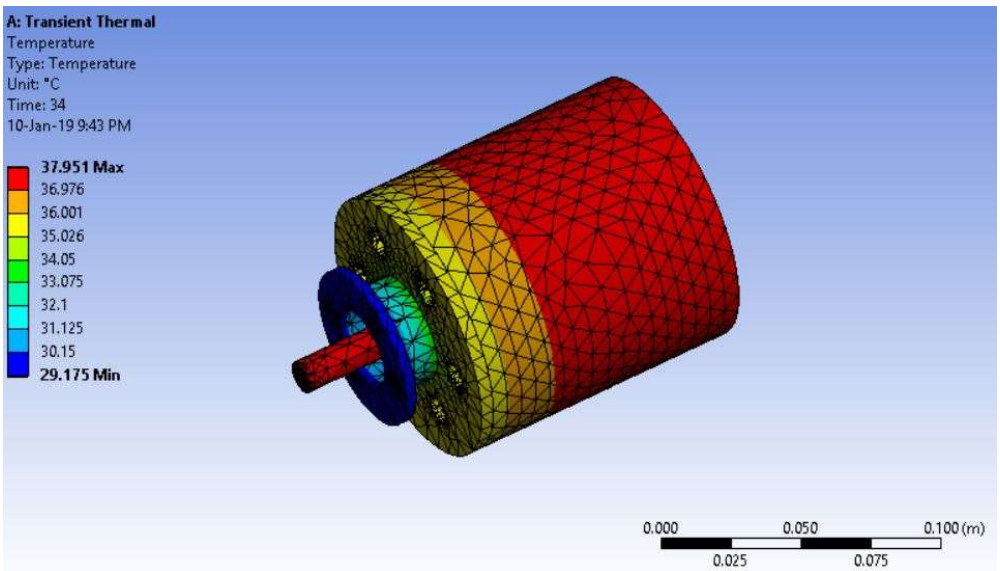

Figure 26. Motor thermal model.

Predicted Pod Trajectory

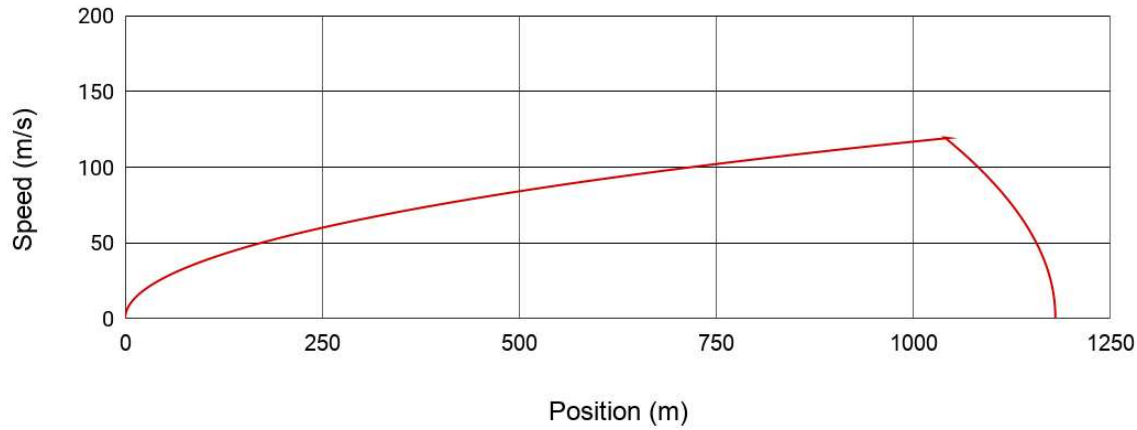

Figure 27: Pod speed vs. position over the course of an entire run.

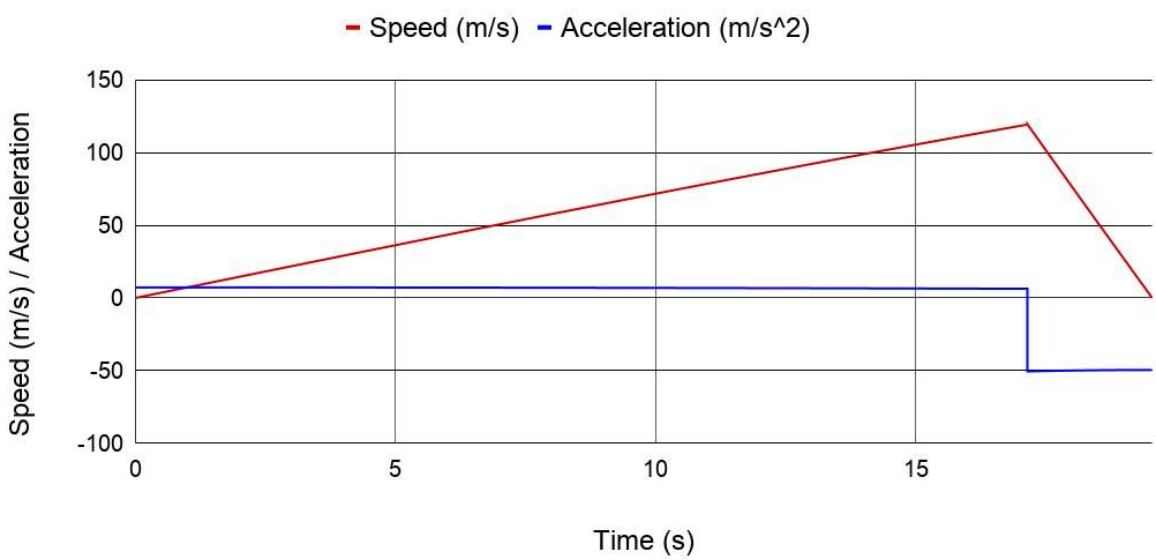

Figure 28: Mission profile showing speed and acceleration as a function of time.

The pod trajectory consists of two stages: the acceleration phase and the deceleration phase. During the acceleration phase, the each of the four motors supplies a constant 8.78 Nm of torque, which results in an initial acceleration of 0.74 g. This constant acceleration is maintained for 17.2 seconds until the pod reaches its maximum speed of 119.3 m/s at a location 1044 m from the beginning of the track, at which point power to the motor is quickly ramped down to zero and air pressure is released from the brakes. This release of pressure causes the brakes to apply a total of 4218 N of braking force to stop the pod, resulting in a deceleration of about 5 g. The pod comes to rest 19.8 m before the end of the track after a total pod run time of 19.6 seconds.

Predicted Vibration Environments

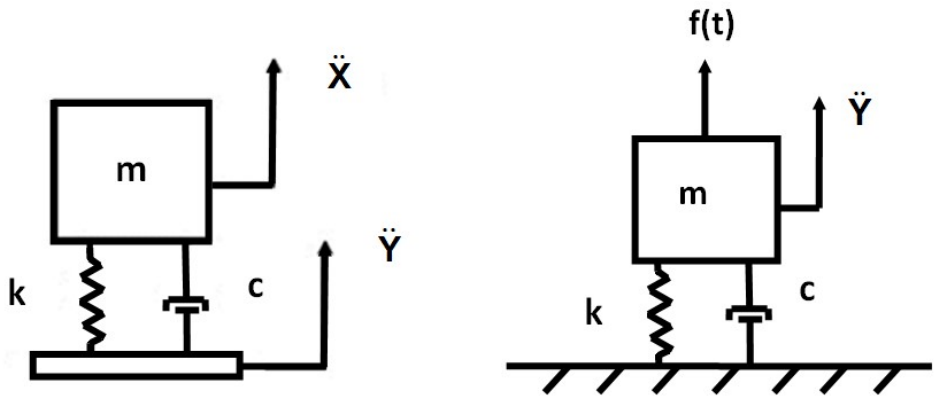

Figure 29: Diagram of SDOF system used in vibration model.

The model simulates the SDOF system to the base excitation as shown in the figure. The equivalent force f(t) is dependent on the position of the wheel relative to the pod. This relation is derived from the differential equation of motion shown below where x is the position of the pod, y is the position of the wheel relative to a zero, and k and c are the equivalent spring and damping coefficient of the pod. F(t) is the right-hand side of the equation.

Equation 3: Mass-spring-damper differential equation.

$$M\ddot{x} + C\dot{x} + Kx = Ky + C\dot{y}$$

The track was assumed to have purely misalignment deflections; that is, there would be small gaps between each beam. Each beamed were assumed to be 3.8 meters long, and each gap was assumed to be approximately 0.003 meters. From this the path of the wheel as it traverses the track was obtained to be a piecewise function of its position on the track. The path is shown below and is cyclical where the position of the wheel is referred to as z in this figure. The amplitude of the dip was derived as a function of the wheel radius.

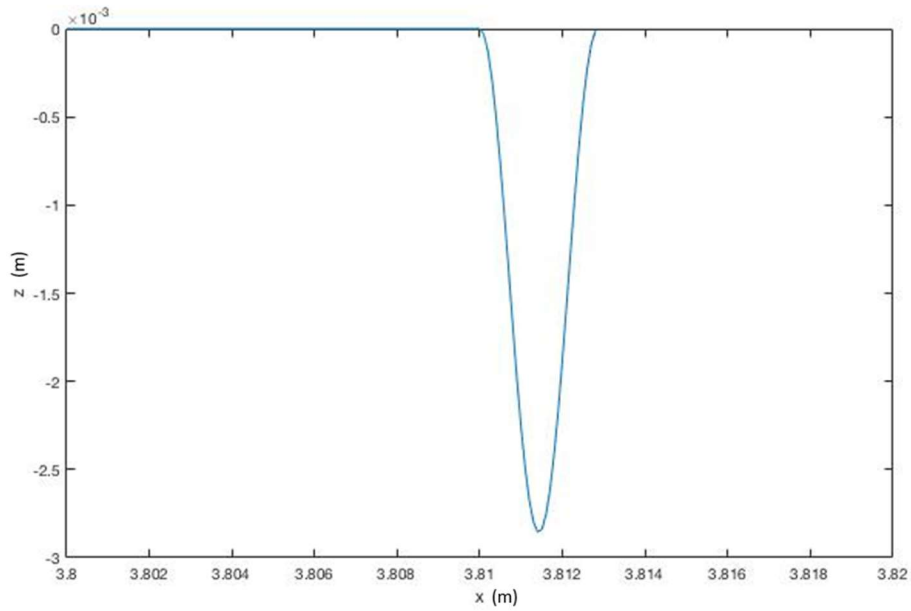

Figure 30: Vertical position of wheel vs. horizontal position of on track

Because of the relatively short time frame of the deflection, the excitation was estimated with the Dirac delta, and the new equation of motion is shown below where K_2 is the spring constant K multiplied by the area under the curve of the sin portion of the y.

Equation 4. Mass-spring-damper system differential equation with Dirac delta estimation.

$$M\ddot{x} + C\dot{x} + Kx = K_2\delta(t)$$

The impulse forcing is also applied repeatedly. There are no contributions from the damping coefficients because the Dirac delta would essentially be 0, and the transient responses from both sides of the cosines can be assumed to cancel. This assumption would not work if the gap was bigger.

Analytical solutions for an impulse forcing are known, and the solution was obtained by using the principle of superposition for linear ODEs.

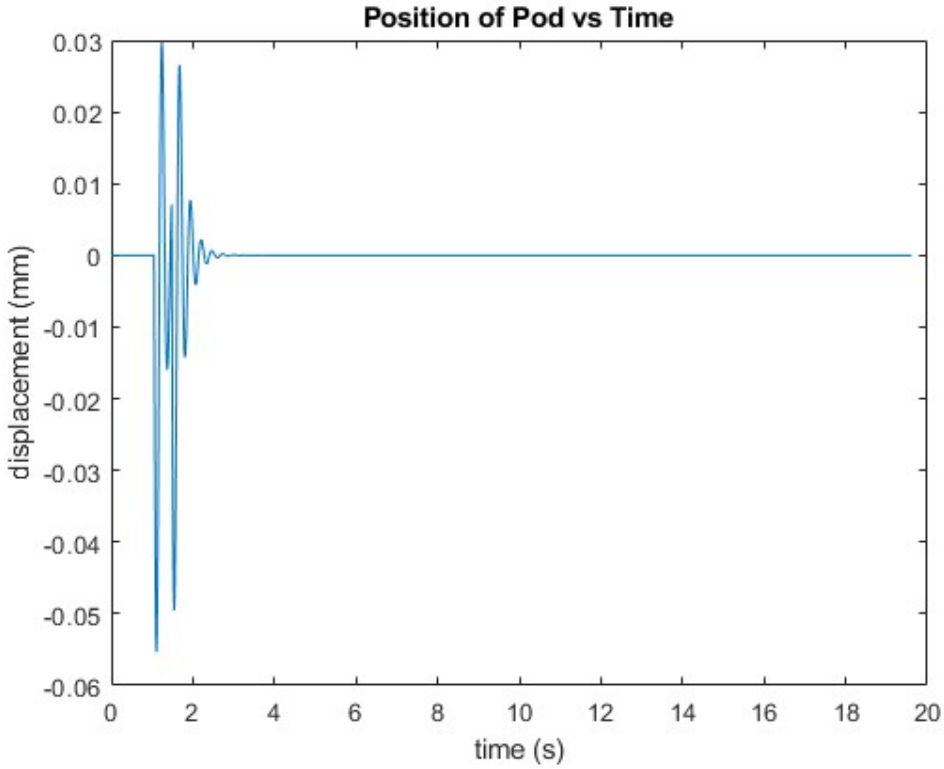

Figure 31. Simulation of pod vertical displacement as a function of time over two dips.

The figure above shows the pod as it traverses two dips. These results show that the amplitudes of the pod's vibration will be miniscule and high frequency oscillation is to be expected. Additionally, very little force is transmitted to the wheels and the pod from the vibration due to the small displacements of the pod.

3. Pod Structural Design Cases

Methodology

Finite Element Analysis (FEA) was conducted on various critical components of the vehicle structure in ANSYS Workbench 18.2 using the Static Structural package. The simulations break down the various components into nodes to approximate the deformations and stresses on the body. Using FEA to analyze these components can determine the safety factors of critical structural components for the loading cases the vehicle will experience. Mesh, loading, constraint, and stress results are shown for each tested load case and component.

Future testing will involve integrated FEA modeling of the entire vehicle structure. This is currently not practical due to memory and storage restrictions on Georgia Tech's virtual desktops. A dedicated FEA and CFD desktop is expected to be available for team use within the next two months.

Critical Structural Components

The most critical structural components are shown in Figure 32. These are the brackets for the braking subassemblies on the bottom and top of the track, and the vehicle chassis.

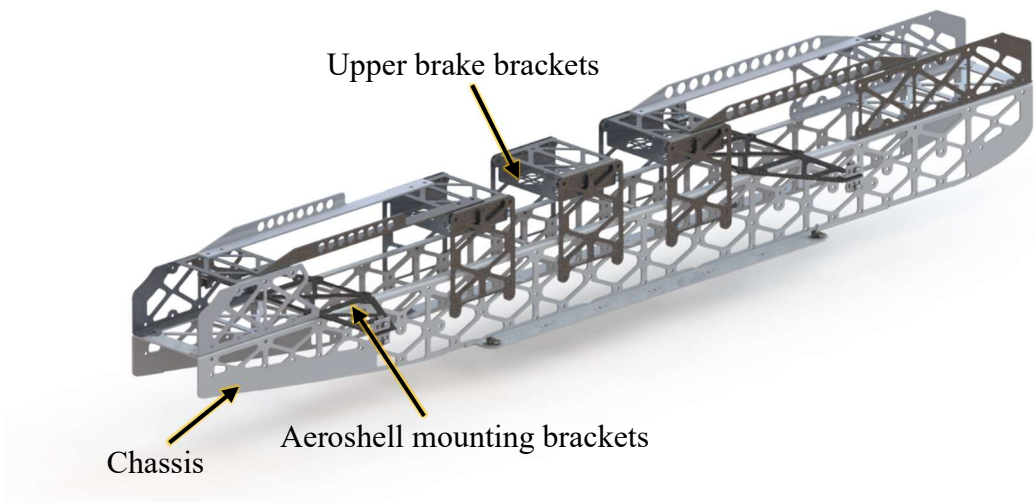

Figure 32. Primary vehicle structure with critical components labeled.

Deceleration due to braking

Chassis

A deceleration study was conducted on the vehicle chassis to ensure structural integrity during braking. In accordance with the mission profile, a 5G acceleration was applied to the entire chassis. The vehicle superstructure was ignored due to computational limitations,

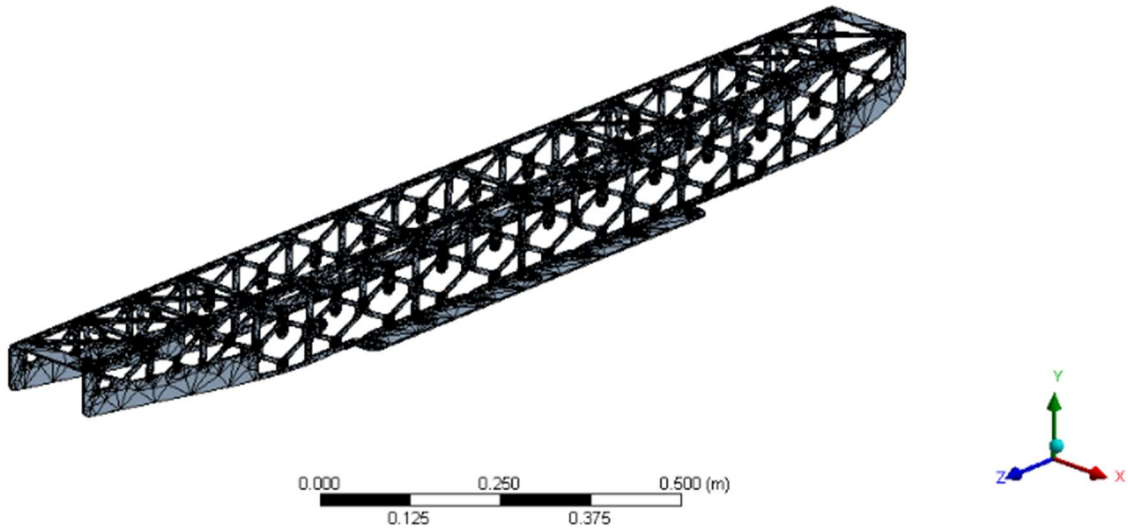

Figure 33. Mesh used for deceleration analysis of the chassis with the mesh refined around the fixed constraints shown in Figure 34.

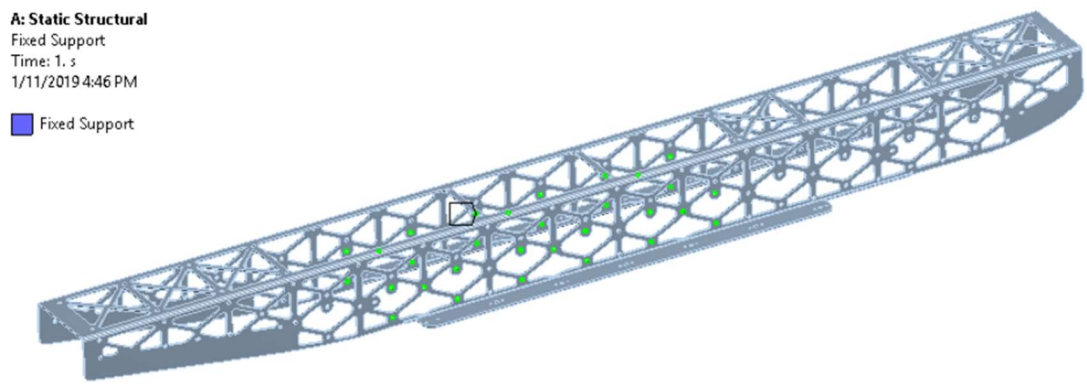

Figure 34. Visualization of the fixed constraints applied to the chassis. A 5G deceleration was applied on the entire body.

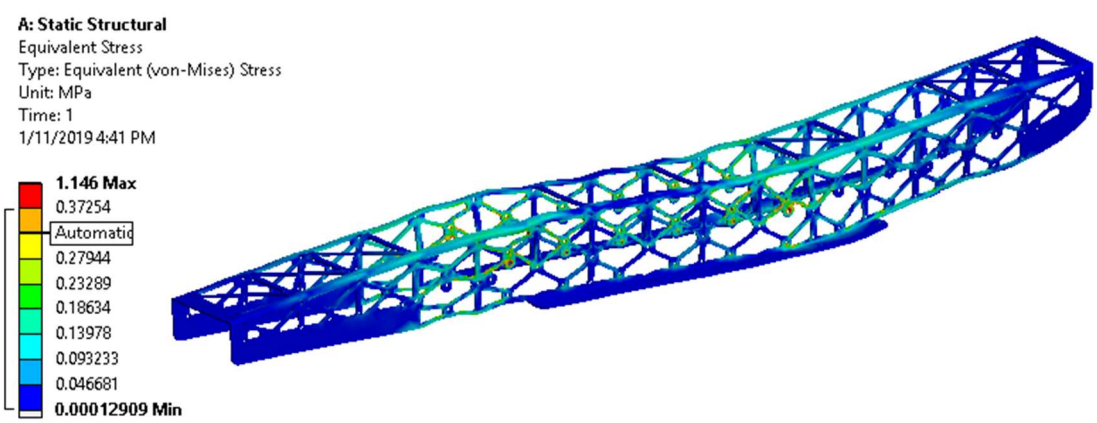

Figure 35. Von-Mises stresses on the chassis during a 5G deceleration. The maximum stress sustained is 1.146MPa resulting in a minimum factor of safety (FOS) of 104.71.

Upper braking brackets

FEA of the upper brakes was conducted in order to analyze the effect of 5G deceleration on the supporting bracket. The meshing and overall geometry of the upper brakes are shown in Figure 32. The mesh was refined at the holes where the brakes interface with the chassis in order to get a more accurate approximation of deformations and stresses. There is a 420 Newton axial force applied on the face of the brake pad which can be seen in Figure 37. The maximum deformation of the upper brakes is about 2.484×10^{-6} meters and the maximum Von-Mises stresses sustained in the upper brakes are 16.4 MPa.

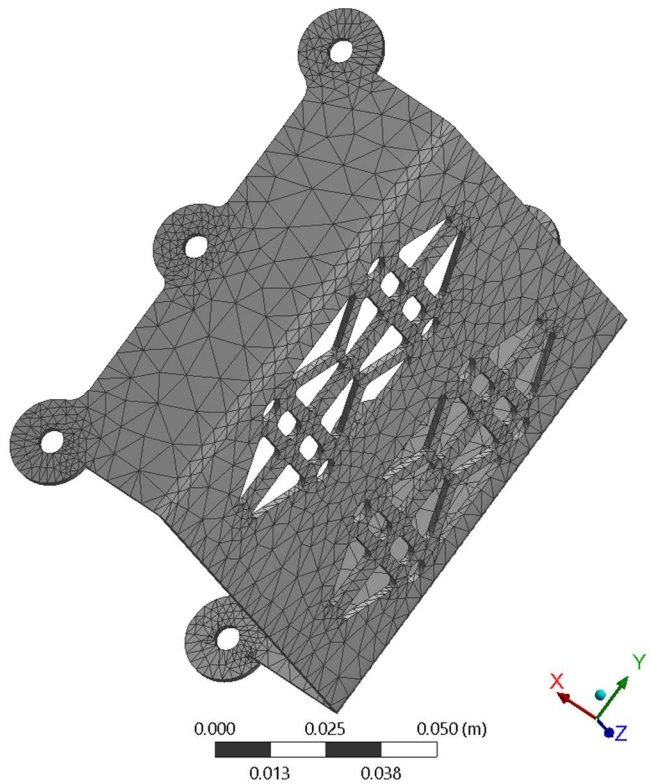

Figure 36. Mesh model used to analyze upper brake mount with the mesh refined at the mounting holes that connect the mount to the chassis.

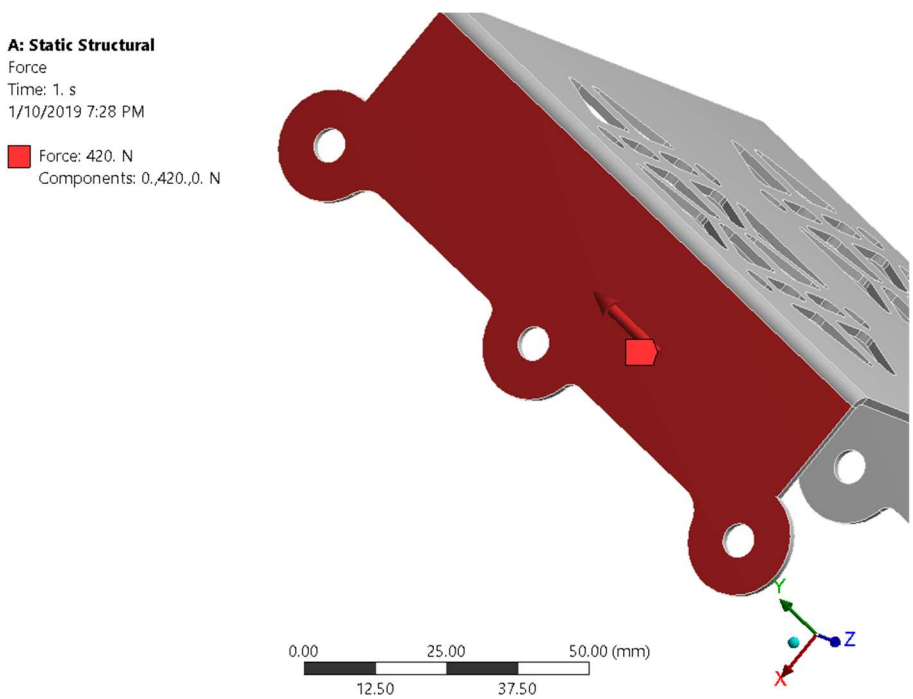

Figure 37. Visualization of axial force applied along the face of the brake mount.

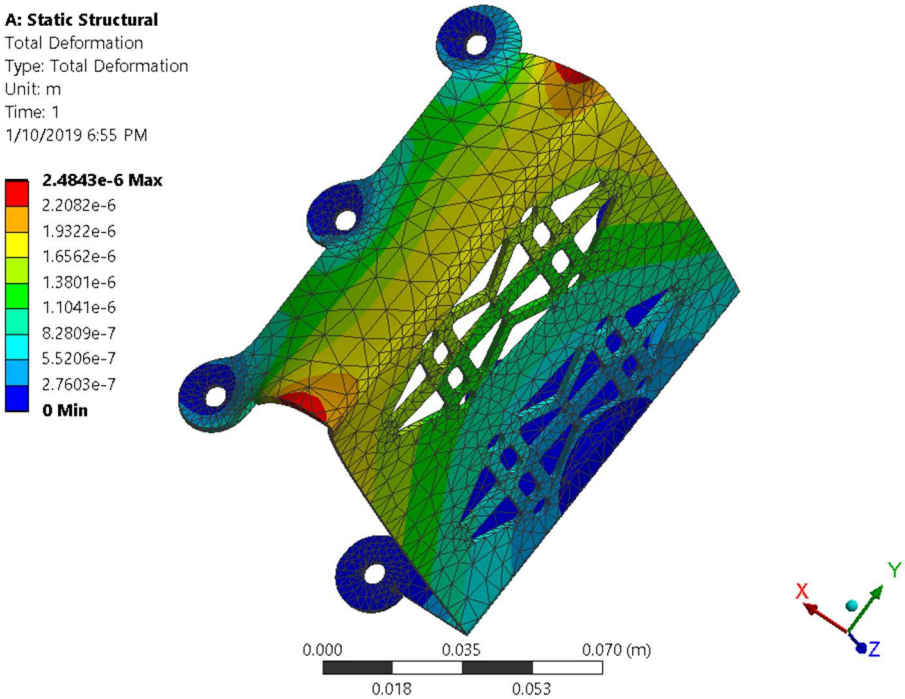

Figure 38. Deformation results of upper brake mount showing a maximum deformation of 0.00248 millimeters.

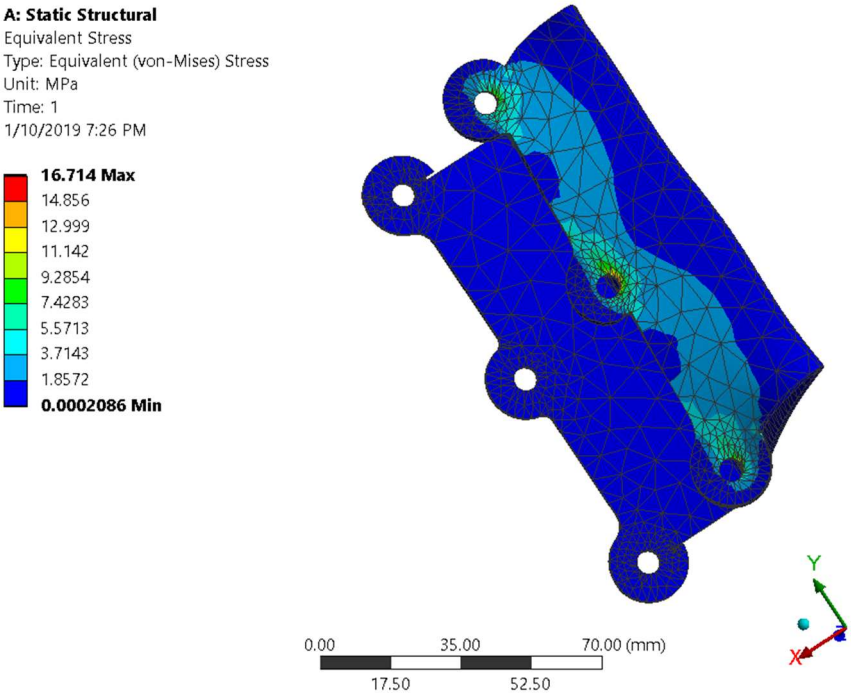

Figure 39. Visualization of the von-Mises stress sustained by the brake mount.

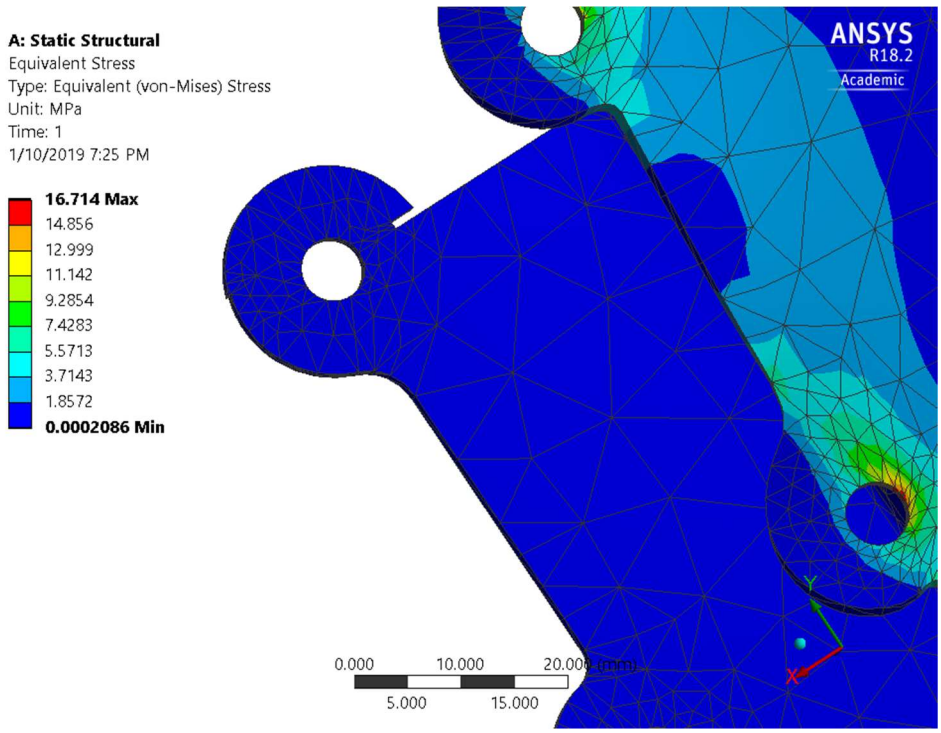

Figure 40. Close-up of brake mount showing the location of maximum stress. The maximum stress sustained is 16.71MPa resulting in a minimum factor of safety (FOS) of 7.18.

Lower braking brackets

An analysis of the lower braking brackets was conducted to analyze the effect of a 5G deceleration on the mounting between the lower brakes and vehicle chassis. Since this braking bracket it so simple, it was able to be simulated with the braking module included.

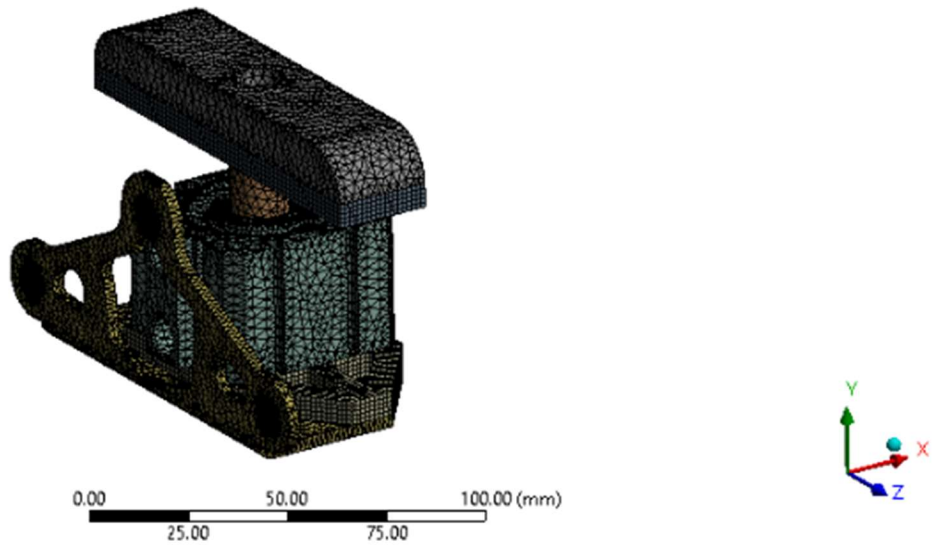

Figure 41. Mesh used for lower braking assembly FEA.

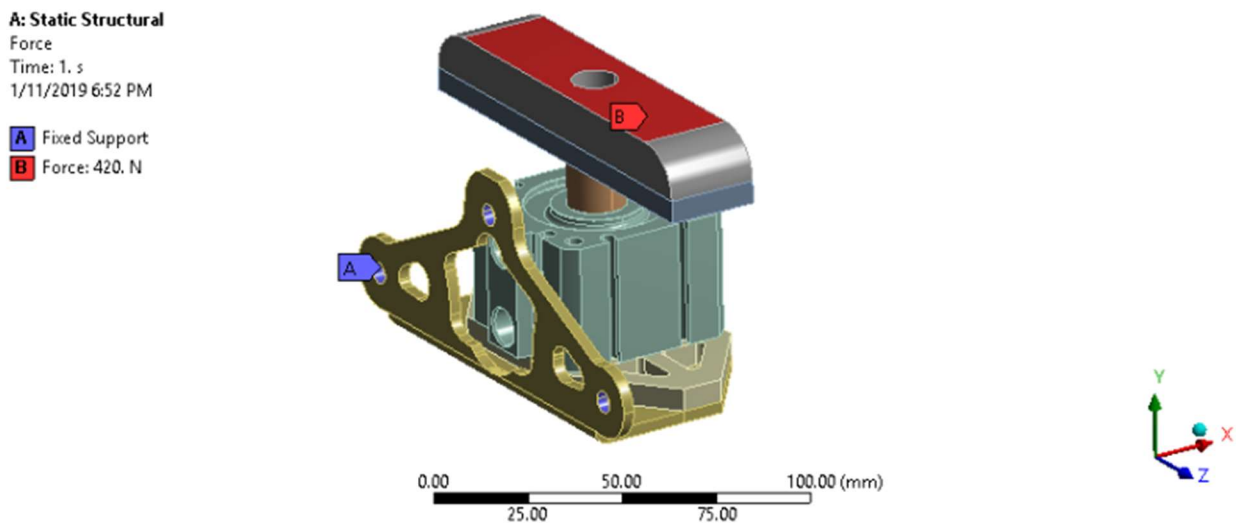

Figure 42. Fixed constraint and loading conditions for the lower brake assembly. The 420N loading on the brake pad was calculated to correspond closely to a 5G deceleration of the entire vehicle.

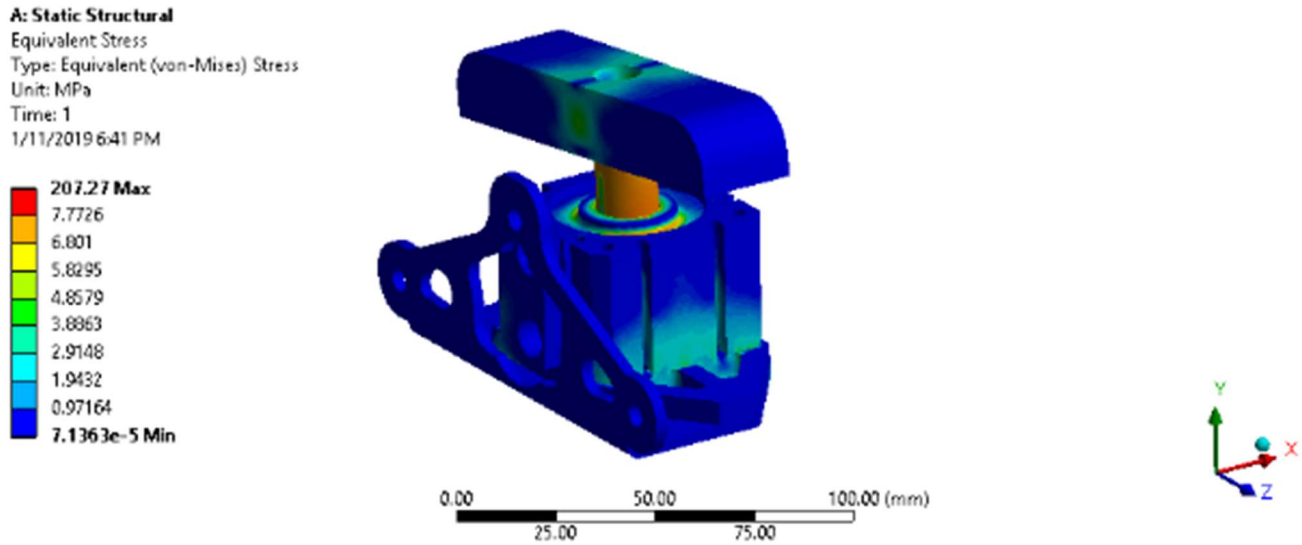

Figure 43. Von-Mises stress present in the lower braking system. The maximum stress is 207.3MPa, which in the steel housing of the pneumatic cylinder results in a safety factor of 3.86.

Aeroshell Weight Support

Finite element analysis of the aeroshell mounting brackets was conducted in order to analyze the effect of the weight of the aeroshell on the mounting system to the chassis. The meshing and overall geometry of the mounting bracket is shown in Figure 44. The mesh was refined at the holes where the L-brackets interface with the main horizontal supports as the weight of the aeroshell is distributed across the locations. The maximum deformation of the main horizontal supports is 0.00146 meters and the maximum Von-Mises stress sustained is 79.13 MPa.

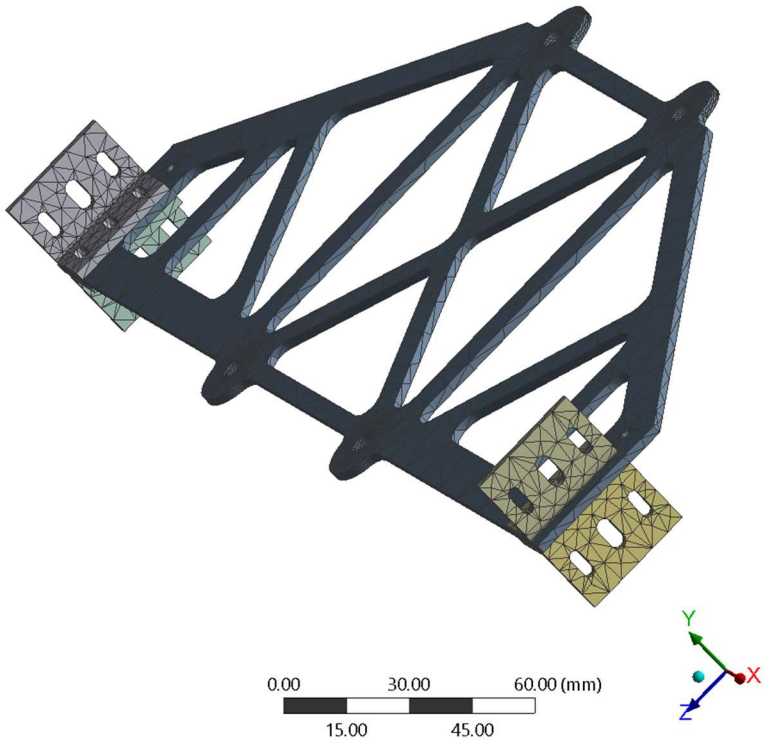

Figure 44. Mesh model used to analyze the mounting bracket with the mesh refined at the mounting holes of the L-brackets that connect the aeroshell to the bracket.

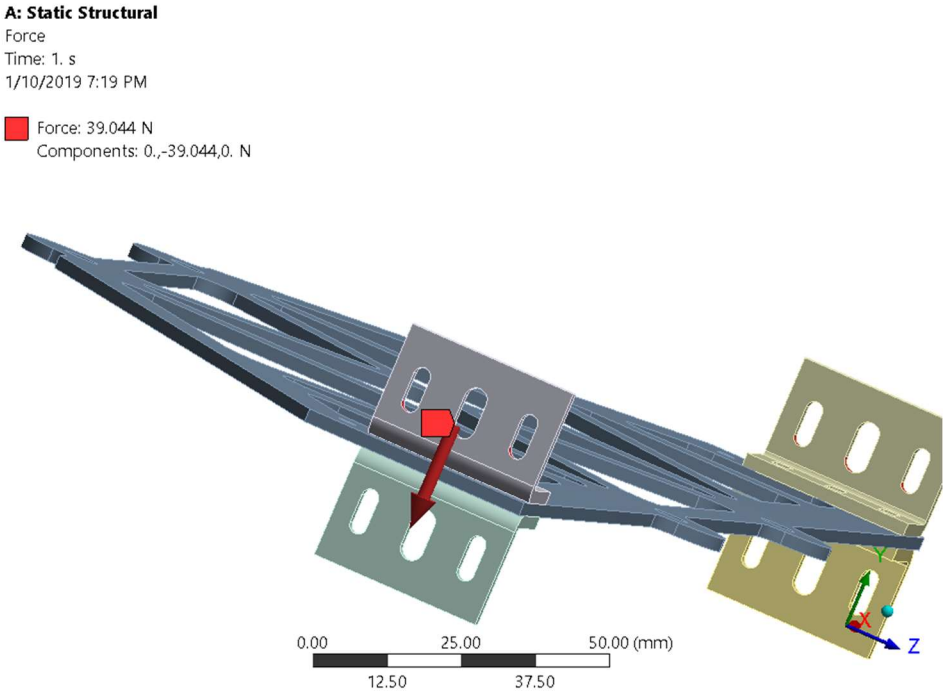

Figure 45. Visualization of axial force applied along the L-bracket connected to the mounting bracket.

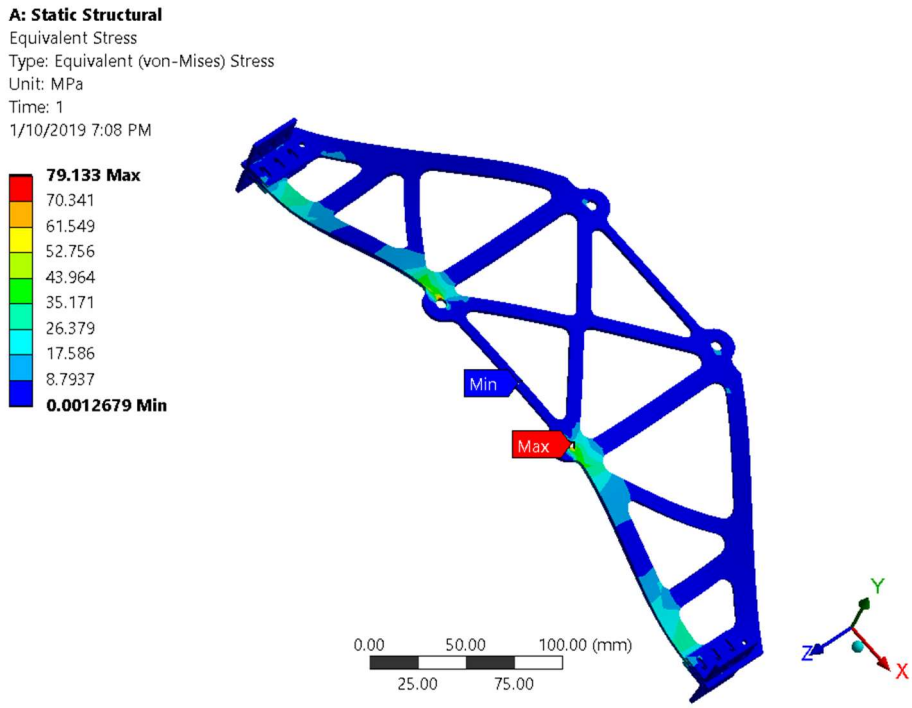

Figure 46. Visualization of the von-Mises stress sustained by the mounting bracket with a maximum stress of 79.13MPa resulting in a minimum factor of safety (FOS) of 11.94.

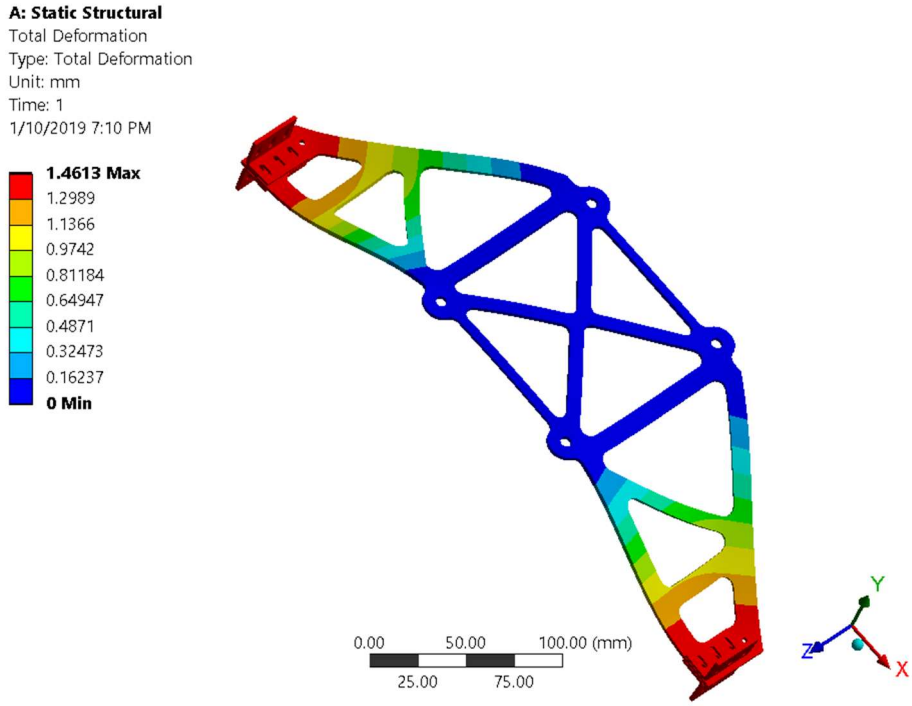

Figure 47. Deformation results of the mounting bracket showing a maximum deformation of 1.46 millimeters.

Off-Nominal Crash

In order to simulate a more-than worst case crash, a 100G acceleration was applied to the chassis. The front face is fixed to approximate the unlikely event of the pod clearing the foam pit at the end of the track and hitting a solid surface. The actual acceleration during such an event is unknown, but the failure behavior of the chassis structure can be learned regardless, as the stresses present scale linearly with acceleration. The mesh shown in Figure 33 was used, and the front edge of the sheet metal chassis was fixed. A large deflection solver was used to account for stresses well in excess of the ultimate tensile strength of the aluminum 6061 alloy used.

Areas with Von-Mises stresses above 310 MPa will almost certainly result in catastrophic material failure. Results are shown in Figure 48.

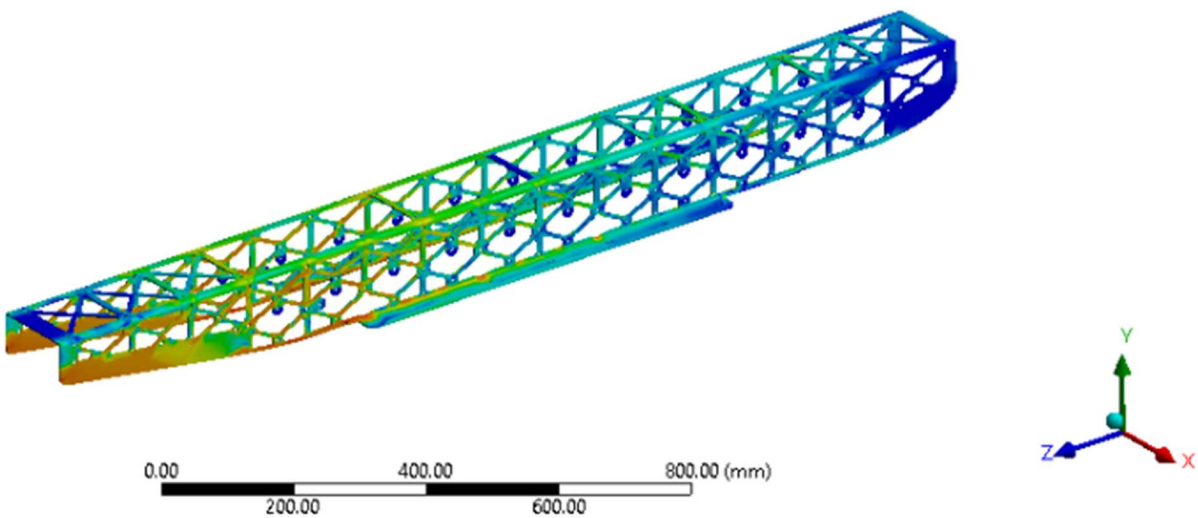

Figure 48. Off-nominal crash with 100G deceleration. Note that the orange and red contours indicate locations where the ultimate stress is exceeded.

From the above figure it is clear that the vehicle is likely to buckle in the -Y direction just before the bottom flanges in the chassis.

4. Pre-Competition Subsystem & Pod Functional Testing Process

Propulsion and Braking Systems

To test the braking system and motors, a test rig will be built consisting of a shaft and disc with a single motor. The motor will rotate the shaft and disc, and the braking system and stability systems will be tested on the disk portion of the rig. A single cylinder from the braking system will be built and tested on the test rig to validate the braking force, wear of the brake pads, total heat magnitude and distribution the brake pads will experience. The heating of the motor will be tested to make sure it only heats up to the expected temperature. The electronic controls of the motor will be tested to makes sure they perform as expected.

Electronic Systems

Overview

1. Test all components out of the box, ensure they are working and returning correct values.
2. Test each module individually
3. Test the pod

Component Tests

1. Fiducial Components
    a. Inertial Measurement Unit
        i. Use physics lab resources to confirm reading accuracy.
            1. Subject both the lab IMU and the pod IMU to the same forces/accelerations, compare their readings. Note accuracy of MEMs that will be used in pod. Record accuracy
    b. Rotary Encoder on free wheel
        i. Put a wheel on a stepper motor. Compare the stepper motor's delta theta to the rotary encoder delta theta
        ii. Observe encoder output on oscilloscope to measure pulse count, phase and relation to encoder speed
    c. Motor Encoder
        i. Put a wheel on a stepper motor and attach the rotary encoder to it. Compare the stepper motor's delta theta to the rotary encoder delta theta
    d. Retroreflective Sensor
        i. Place retroreflective tape with same thickness as design thickness on motor/wheel and spin at maximum pod speed (maybe a little under). Check if the 3 kHz+ sampling rate can keep up and gives accurate data. Then increase angular velocity by moving it closer
        ii. Depending on the position and angle the sensors are mounted on the pod, find the distance between the sensors and the retroreflective tape and test with that distance on the taped wheel
    e. Laser Distance Sensor
        i. Measure varying physical distances (50ft, 100ft, 200ft) from a natural target (metal disk simulating the end of the tube) using physical measurement methods (tape measure, measuring wheel). Compare with sensor reading

    f. Thermal Sensors
        i. Utilize a commercial temperature sensor (i.e. Klein Tools Dual-Laser Infrared Thermometer) as a control. Compare Amtherm contact thermistor reading with control's reading at varying temperature ranges
    g. Fiducial Microcontroller
        i. Boot up and test all IO and functionality works. Run testing software
2. Propulsion
    a. Motors
        i. Supply power and test if motors run
    b. Motor Controllers
        i. Ensure that the motor controller properly drives the motors at the requested speed and torque
3. Braking Components
    a. Pressure Regulator
        i. Ensure pressure regulator regulates a high air pressure source to a lower pressure
    b. Linear Transducer
        i. Compare linear transducer readings to caliper readings. Ensure readings are within tolerances
    c. Air Pressure Transducer
        i. Ensure that the pressure transducer accurately measures pressure at multiple pressures.
4. Battery Management
    a. Battery Management System
        i. Check Connections
            1. Can interface with and draw power from all battery groups
        ii. Check Power Delivery
            1. Draw varying amounts of power per trial and check that battery system can deliver the
        iii. Check Temperatures
            1. Measure operating temperature while battery is delivering full load in each trial
    b. Batteries
        i. Check Capacity. Fully charge then fully drain, while measuring capacity charged and drained. Check if the batteries reasonably matched the capacity calculated from their advertised specifications in each trial
    c. Fuse/Pyro Switch (PSS1)
        i. Check if switch is triggered by its rated conditions
    d. Shunt (DC Ammeter Shunts / Busbar Shunts (RSN-300-100B))
        i. Take controlled amounts of a current and observe of shunt measures them accurately compared to a precise lab-grade ammeter
    e. Battery Contactor (PB1985-ND)

    f. Ensure isolation monitoring accurately measures resistance
        i. Ensure isolation with isolation monitoring devices and multimeter
5. General Electronics
    a. Microcontrollers
        i. Run diagnostic software, test if all IO and functionality is complete
    b. Master Computer
        i. Run diagnostic software, test if all IO and functionality is complete
    c. Rocket M900
        i. Test with second Rocket M900 to ensure proper bridging

Module level testing

Isolate each module, simulating correct inputs from other interdependent modules, in order to observe the isolated module's behavior. All modules will be continuously checking for FAULTS throughout each subsection of testing.

1. Battery Module
    a. FAULTS on startup
    b. Sensors
        i. Thermistors return correct, non-zero values
        ii. Shunt measurements are correct
    c. Actuators
        i. Battery contactors work
    d. State Transitions
        i. Low Power On, High Power Off
            1. Test low power draw from battery system
        ii. Low Power On, High Power On
            1. Test high power draw from battery system (estimated maximum power draw from pod at full operation + some headroom)
    e. Send mock FAULTS.and check if battery system's transition to ESTOP is immediate and effective
2. Fiducial Module
    a. FAULTS on startup
    b. Sensors
        i. All sensors return correct, non-zero values
    c. Actuators
    d. State Transitions
        i. fid.SAFE_TO_APPROACH
            1. Check to see if all sensors in fiducial module work together and return correct values under testing conditions.
        ii. fid.READY_TO_LAUNCH
            1. Check to see if all sensors in fiducial module work together and return correct values under testing conditions.
        iii. fid.MOVING

            1. Check to see if all sensors in fiducial module work together and return correct values under testing conditions.
    e. Send mock FAULTS to each sensor and check if the module's transition to ESTOP is immediate and effective
3. Braking Module - Construct a small rig to hold braking system and a force sensor. Apply brakes fully and check that they applied the necessary force. Also measure brake temperatures during these trials and ensure they are in safe ranges (using the control infrared sensor from the amtherm sensor testing)
    a. FAULTS on startup
    b. Sensors
        i. Pressure Regulator, Linear Transducer and Air Pressure Transducer all working together and returning correct values with a controlled test pressure tank
    c. Actuators
    d. State Transitions
        2.1.1 ENGAGING
            1. Check if the pressurizing tank returns correct values
        i. ENGAGED
            1. Check fully pressurized tank for correct values necessary for fully engaged brakes
        ii. DISENGAGING
            1. Check if the depressurizing tank returns correct values
        iii. DISENGAGE
            1. Check if fully disengaged breaks yield correct sensor return values necessary for fully disengaged brakes
    e. Send some mock FAULTS
4. Motor Interface Module
    a. Sensors
    b. Actuators
    c. State Transitions
    d. Check for FAULTS
    e. Send some mock FAULTS
5. Master Computer Module
    a. Link up fiducial, braking, and battery subsystems to the master computer. Construct and simulate these subsystems' WARNING and FAULT signals and send them to the master computer, observing if the master computer outputs the correct commands to each subsystem as a result
        i. Test all WARNING signals from all subsystems, check for correct response
        ii. Test all FAULT signals from all subsystems, check for correct response

5. Pod Manufacturing Plan

Pod production schedule

Team Design Reviews and Deadlines

Table XVIII. Overall Team Reviews and Deadlines.

Subteam	Task	Start Date	End Date	Task Type
All	Internal PDR	9/5/2018	10/25/2018	Design Review
All	Mission Profile	9/7/2018	10/24/2018	Design Review
All	External PDR	10/29/2018	11/1/2018	Design Review
All	SpaceX PDR	11/2/2018	11/2/2018	Deadline
All	Internal FDR	11/8/2018	12/7/2018	Design Review
All	Internal CDR	11/12/2018	11/14/2018	Design Review
All	External FDR	11/12/2018	12/18/2018	Design Review
All	External CDR	11/19/2018	11/21/2018	Design Review
All	SpaceX FDR	1/11/2019	1/11/2019	Deadline
All	SpaceX Presentation	1/31/2019	1/31/2019	Deadline
All	Pod Integrated	4/1/2019	4/1/2019	Deadline
All	SpaceX Safety Briefing	5/1/2019	5/1/2019	Deadline

Vehicle Dynamics Production Schedule

Table XIX. Vehicle Dynamics Production Schedule.

Subteam	Task	Start Date	End Date	Task Type
Vehicle Dynamics	Propulsion Built	1/14/2019	2/15/2019	Build
Vehicle Dynamics	Braking Built	1/14/2019	3/1/2019	Build
Vehicle Dynamics	Stability Built	1/14/2019	2/15/2019	Build
Vehicle Dynamics	Waterjet brake pads	1/21/2019	1/25/2019	Build
Vehicle Dynamics	Manufacture stability rockers	1/21/2019	2/1/2019	Build
Vehicle Dynamics	Waterjet brake mounts	1/28/2019	2/1/2019	Build
Vehicle Dynamics	Assemble brakes	2/4/2019	2/15/2019	Build
Vehicle Dynamics	Mount motors	2/4/2019	2/8/2019	Integrate
Vehicle Dynamics	Manufacture test rig	2/18/2019	3/1/2019	Test
Vehicle Dynamics	Assemble pneumatic systems	2/18/2019	3/1/2019	Build
Vehicle Dynamics	Test pneumatic system	3/4/2019	3/15/2019	Test
Vehicle Dynamics	Integrate VD systems with chassis	3/18/2019	3/29/2019	Integrate
Vehicle Dynamics	Full VD system testing	3/25/2019	5/3/2019	Test

Aerostructures Production Schedule

Table XX. Aerostructures Production Schedule.

Subteam	Task	Start Date	End Date	Task Type
Aerostructures	Waterjet and bend chassis	1/21/2019	3/13/2019	Build
Aerostructures	Waterjet and bend superstructure parts	1/21/2019	3/27/2019	Build
Aerostructures	MDF mold for aeroshell	1/23/2019	2/20/2019	Build
Aerostructures	Carbon fiber layup for aeroshell	2/20/2019	4/1/2019	Build
Aerostructures	Structures Integration	3/13/2019	4/8/2019	Integrate

Electronics Production Schedule

Table XXI. Electronics Production Schedule.

Subteam	Task	Start Date	End Date	Task Type
Electronics	Circuit schematic	12/28/2018	1/6/2019	Build
Electronics	Critical Circuit Prototyping	1/1/2019	1/11/2019	Build
Electronics	Schematic CDR	1/2/2019	1/2/2019	Design Review
Electronics	Schematic FDR	1/6/2019	1/6/2019	Design Review
Electronics	PCB Design	1/7/2019	1/13/2019	Build
Electronics	PCB CDR	1/10/2019	1/10/2019	Design Review
Electronics	Critical Circuit Driver Development	1/12/2019	1/23/2019	Build
Electronics	PCB FDR	1/13/2019	1/13/2019	Design Review
Electronics	PCB Initial Fabrication	1/14/2019	1/27/2019	Build
Electronics	PCB Initial Order	1/14/2019	1/27/2019	Build
Electronics	Critical Circuit Isolated Test Development	1/23/2019	1/31/2019	Test
Electronics	Assembly and Solder	1/28/2019	1/31/2019	Build
Electronics	PCB Initial Test	2/1/2019	2/6/2019	Test
Electronics	Integrate drivers with RTOS	2/6/2019	3/12/2019	Integrate
Electronics	PCB Debug	2/7/2019	2/14/2019	Test
Electronics	PCB Design Fix	2/15/2019	2/21/2019	Build
Electronics	PCB Final Fabrication	2/22/2019	3/8/2019	Build
Electronics	PCB Final Order	2/22/2019	3/8/2019	Build
Electronics	PCB Final Test	3/9/2019	3/13/2019	Test
Electronics	Module level integration	3/14/2019	3/21/2019	Integrate
Electronics	Module testing	3/22/2019	4/5/2019	Test
Electronics	Master computer complete	4/5/2019	4/5/2019	Deadline
Electronics	Systems level integration	4/6/2019	4/26/2019	Integrate
Electronics	System level test	4/27/2019	5/4/2019	Test

Pod Cost Breakdown and Funding Plan

We have successfully completed Phase 1 & 2 of our funding plan and are procuring components. Phase 3 is underway, and a majority of funds are planned to be allocated shortly after final design review.

Table XXII. Pod cost breakdown and funding plan.

Phase	Timeline	Description (of components to be procured)	Funds Allocated	Source(s)
Phase 1	8/2018-9/2018	Initial electronics and communications products Propulsion system and motors	$4,000	SGA
Phase 2	10/2018-11/2018	Metal and composite materials for structures Circuit boards and pressure system electronics	$8,000	SGA
Phase 3	12/2018-7/2019	Dynamical and fluid system components Power system, controllers, and final electronics assemblies Full vehicle integration	$15,000	SGA Corporate Sponsors

6. Electronics System Overview

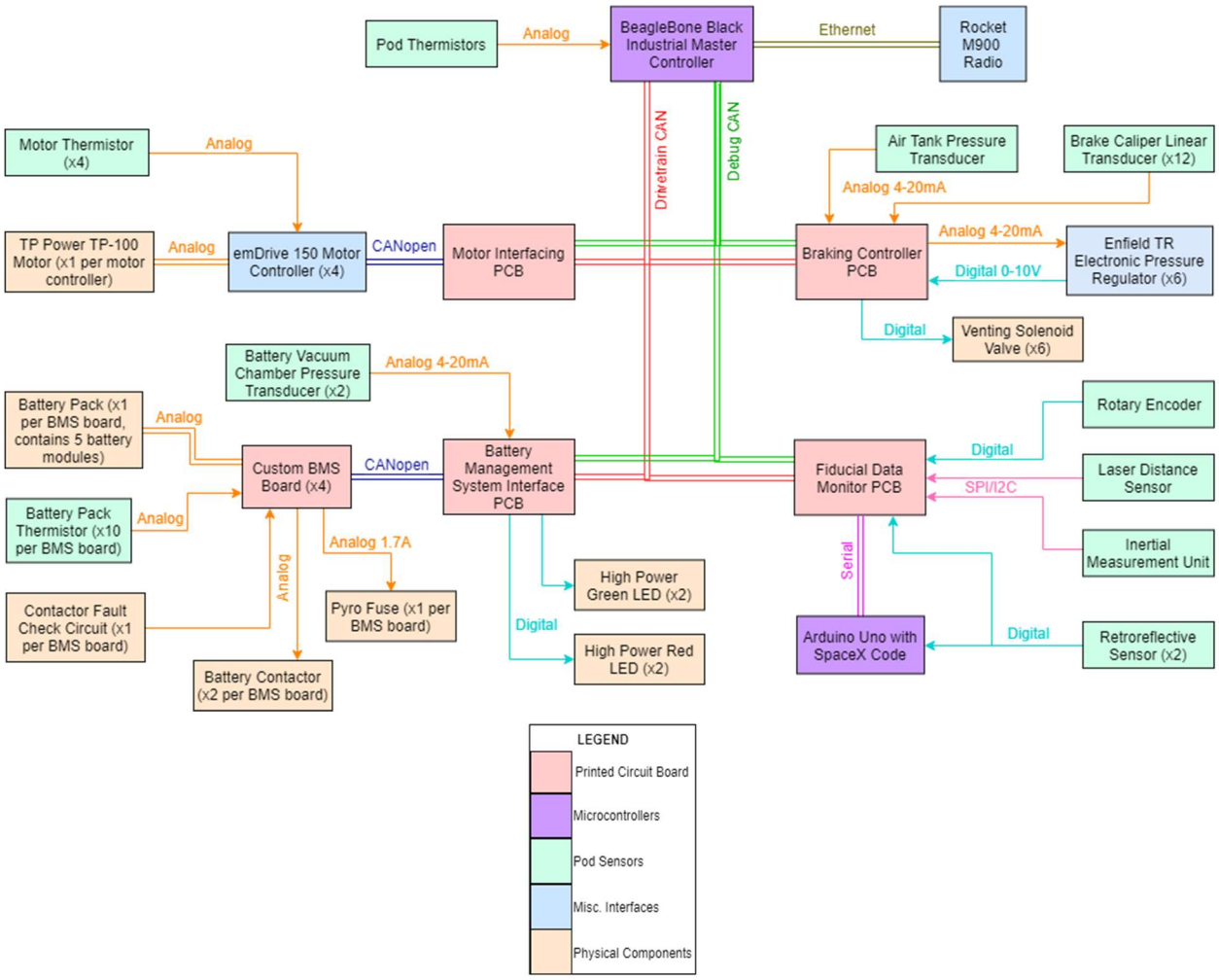

Figure 49. ECU System Interfaces.

The electronics for the pod consist of five important system blocks:

1. Master Computer
2. Motor Interface
3. Braking Controller
4. Battery Management System
5. Fiducial Monitor

The latter four systems are custom printed circuit board shields to be connected to a microcontroller breakout board. As a microcontroller that runs ARM's mbedOS, the Nucleo-144 was selected for its widespread library support and team member familiarity with the C++ based OS. Since the Nucleo comfortably satisfies our peripheral and computing requirements, the same microcontroller was used as our base for the multiple custom shields in our design.

Sensor List and Location Map

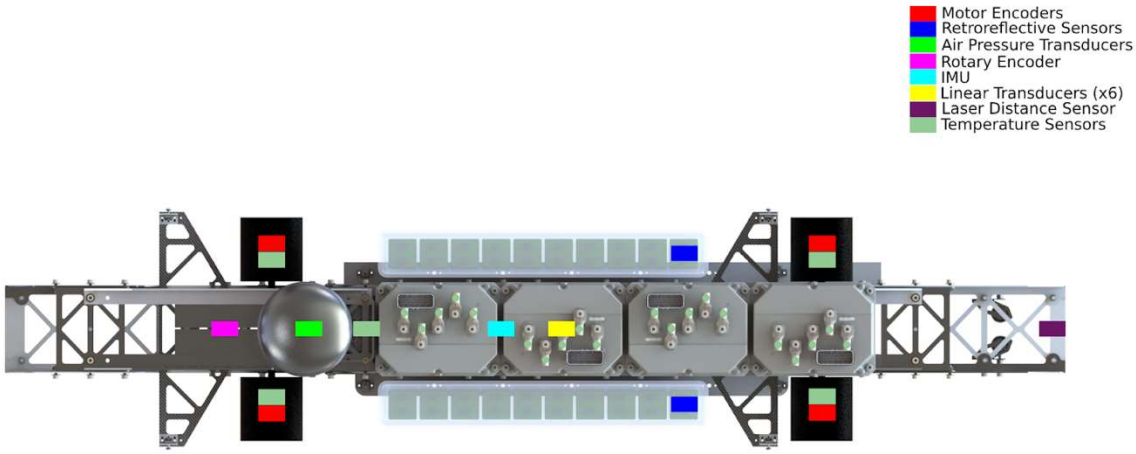

Figure 50. Top-down sensor location map.

General Firmware Overview

General operation of the pod will be governed by a master state machine set by the pod Master Computer and individual nested state machines on each embedded module.

In order to manage a relatively large, complex, and concurrent software base with real-time requirements, an RTOS will be used. The availability of a large number of libraries and code samples drove the choice of selecting mbedOS as the chosen real-time operating system.

Embedded Module Descriptions

Master Computer

The master computer requires hardware and software support for multiple CAN interfaces, Ethernet communication support, GPIO interfaces to connect miscellaneous sensors and should be able to run a dedicated OS. A BeagleBone Black Industrial was chosen as the master computer. It is a single-board single board computer with an onboard processor, Ethernet and CAN interfaces, and a graphics engine.

The master computer is the main bridge to the team laptop, accessed via an onboard Rocket M900 radio. The master computer is connected to the braking, fiducial, battery management and motor interface modules via the drivetrain and debug CAN buses. The drivetrain CAN bus polls and collects important pod status information and sensor data to be relayed back to the team. The controller transmits data through the Rocket M900 to the tube base station, to which the team laptop is connected via ethernet. The debug CAN bus is used for self-testing or user-testing of the entire system.

Motor Interface

The motor interface allows for control of motor statuses and speeds and obtains data about motor health to relay to the rest of the system. The motor interface will be a custom PCB shield, to be mounted on a Nucleo-144 breakout board.

The four emDrive 150 motor controllers will be connected to the Nucleo-144 using CANopen, creating a bus that ensures that only a single CAN interface on the Nucleo is used. Additionally, a single thermistor per motor is connected to the motor controllers, which will in turn provide information about individual motor temperatures to the PCB. The PCB also receives data about motor speed from the controllers and can adjust the velocity setpoint for each individual motor. It is also connected to the rest of the onboard systems via CAN.

Braking Controller

The braking controller actuates the brake controls on the pod via electronic pressure regulators, with a total of six brake sets under control. The braking controller is also a custom PCB shield for the Nucleo-144. The controller is connected to the rest of the system via the drivetrain and debug CAN buses.

The shield will have 4-20mA current loop generators to generate setpoints for the regulators on each brake set. Additionally, the controller receives feedback from the regulators as a digital 0-10V signal to communicate its current setpoint. The microcontroller will implement PID control to adjust and track the setpoint.

The controller also monitors the onboard air tank for a loss of pressure using an air pressure transducer, and monitors brake caliper travel faults using linear transducers, one on each side of the caliper, to ensure the pod is correctly braking. The venting solenoid valves are actuated by the microcontroller during normal operation. In case of a loss of power, the valves default to normally-open, allowing the braking system to engage.

PID Diagram

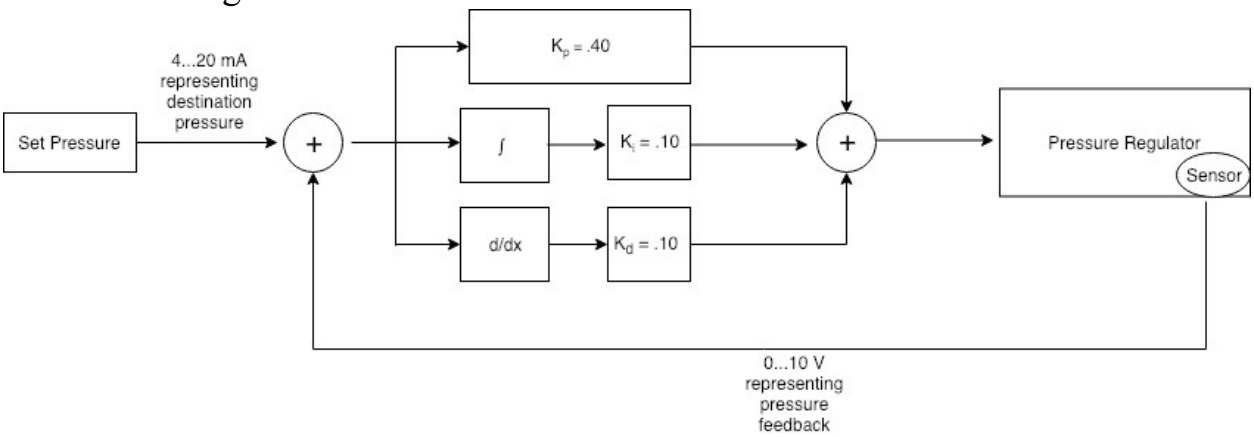

Figure 51. Pressure system PID diagram.

Battery Management System

The battery management system (BMS) monitors and handles the power load delivered to all systems on the pod. All the PCBs involved in the system are Nucleo-144 shields. The BMS is connected to the rest of the system via the drivetrain and debug CAN buses. The master PCB shield is connected to four slave PCB shields, each of which control a pack of five battery modules. The slaves are connected to the master PCB via CANopen.

The slave PCB shields can engage a battery pack using two battery contactors that can be individually controlled, depending on the required power load of the pod. Battery packs can be disconnected in the case of over/under voltage or overheating. The slaves read in current and voltage information from all individual modules in the packs and receive battery temperature via two thermistors on each battery pack. The master PCB shield reads from the slaves and relays the average and maximum of the current, voltage and temperature in each battery pack to the Master Computer.

The master shield also monitors air pressure inside the battery vacuum chambers using air pressure transducers. In the case of a failure detected either in the battery system or another critical system, the BMS can trigger a pyro fuse to blow to disconnect an entire set of battery packs, as a failsafe measure.

Fiducial Monitor

The fiducial monitor is responsible for measuring and determining how far along the tube the pod has travelled. This is again a custom PCB shield connected to a Nucleo-144. An Arduino Uno will also be provided by SpaceX, for logging of distance and speed data. The monitor is connected to the rest of the system via the drivetrain and debug CAN buses.

The pod will rely on the two retroreflective sensors for general location inside the tube, which will be used to detect the reflective strips placed along the sides of the inner tube every 100 ft. The monitor will also gather data from a single rotary encoder, connected to a flywheel placed at the center of mass of the pod. The rotary encoder provides a lower estimate of the distance. An inertial measurement unit (IMU) in the center will ensure the flywheel is in contact with the track and will also measure the acceleration and deceleration of the pod. The fiducial monitor also reads in data from a laser distance sensor towards the end of the run, for a more accurate measure of the remaining distance in the run. This will help the pod stop within 200 feet of the end of the track.

Embedded Module State Diagrams

Braking Controller

Figure 52. Braking interface module state diagram.

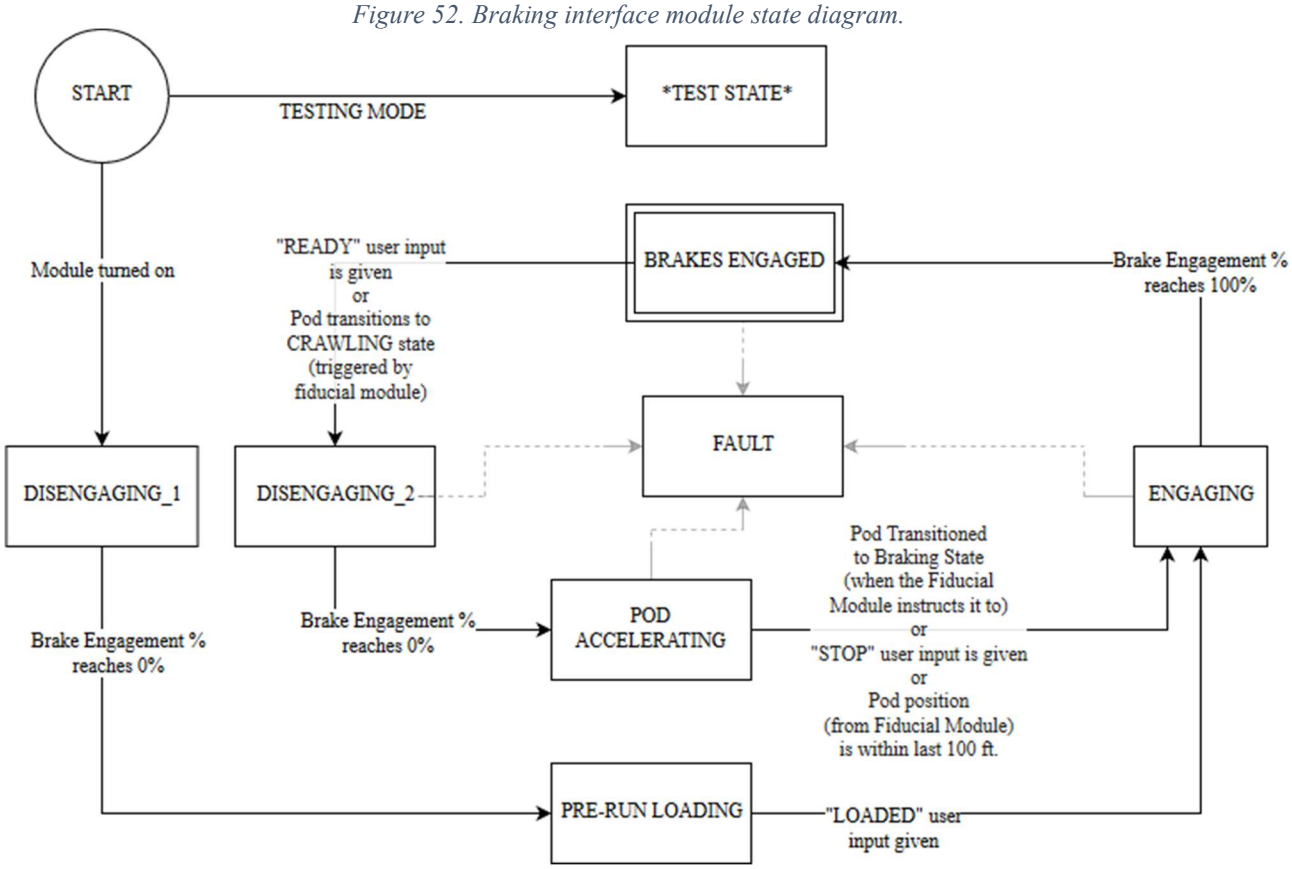

States

1. START

The braking module in this state has the Brakes fully engaged, and the first thing that happens when the module turns on is to go into the disengaging state to disengage the brakes. The overall pod diagram in this state would be in the OFF state.

The braking module starts fully engaged. The overall pod state is OFF.

If the pod goes into Testing Mode, the module will enter the TEST state.

2. DISENGAGING_1

In the DISENGAGING_1 State, the motor velocity is checked to make sure the motor is at rest, and the pod isn't accelerating. The brakes start to disengage, tracking the Brakes Engagement % from the brake caliper linear transducer, until 0% engagement. At this point, the braking module transitions to the Pre-Run Loading State.

3. PRE-RUN LOADING

In this state, the brakes are disengaged. On the overall all state pod machines, this corresponds to the LOAD/UNLOAD state. Once the pod transitions to LOADED, the brakes transition to ENGAGING and the overall pod state transitions to SAFE TO APROACH.

4. ENGAGING

A check is run to ensure power is not being supplied to motors and acceleration is negligible. If power is still being applied to the motors, the braking module will wait for a very small amount of time before applying the brakes regardless. The brakes are ramped up quickly to 100%, to prevent bouncing on the track. If the motor is still drawing current, the motor module will take further actions to cut power to the motor. After the Brake Engagement reaches 100%, brake module transitions into the ENGAGED state.

5. BRAKES ENGAGED

In this state, the Overall Pod Diagram would be in the SAFE TO APPROACH and the READY TO LAUNCH states, since the brakes are applied in both states. After the input "READY" is given, then the brakes transition to DISENGAGING_2.

Another possible transition from this state to the next is from the CRAWLING overall state diagram. If the BRAKES ENGAGED state is engaged after braking at the end of the run, but the pod is not within the last 100 ft. of the track, CRAWLING is used to move slowly to the end. In order to move to the end, the brakes must be disengaged, so the CRAWLING overall state triggers a transition to the DISENGAGING module state.

6. DISENGAGING_2

This DISENGAGING state operates similarly to the first, except that every time the pod enters this state, the sensors in the Braking Module are monitored and any large variation from what is expected can send the pod into the FAULT state. After the pod is done disengaging, the braking module goes to the ACCELERATING state.

7. POD ACCELERATING

This corresponds to any positive velocity motion from the pod, so the LAUNCHING and the CRAWLING states. In this state, the brakes are disengaged, and the pod is free to move. Once the pod is within the last 100 feet of the track, or a STOP command is given, or the entire pod state transitions to BRAKING, the pod will transition to ENGAGING.

8. FAULT

Any fault from any step will lead to this state, from which a signal is sent out to send the rest of the pod into the EMERGENCY BRAKE state. Further faults and warnings are detailed below.

Overall Warnings (Warnings that could happen at any state):

- Brake Control Error (low)

- Tank Pressure too high (mild)
- Tank Pressure too low (mild)
- Data is unstable.

Any warnings lead to a separate WARN state, that return the issue that lead to the warning in the first place, and identifies which sensor or actuator was responsible for the warning. If any warning is fixable (some software error that can be re-assigned, for example Stripe Count), then an attempt is made to fix it. However, if after recalibration multiple times, if that specific warning is causing many issues, then the Pod will call a Fault instead.

Overall Faults (Faults that could happen at any state):

- Pressure Regulator not returning data, or disconnected
- Pressure Transducer disconnected
- Linear Transducer disconnected
- Brake Control Error (severe)
- Tank Pressure too high (severe)
- Tank Pressure too low (severe)
- Data is imprecise and is changing with high volatility
- Component Disconnected
- Braking Motor mismatch fault
- Blows the Pyro Fuse
- Communication Errors with Controller

Any FAULT will send a warning to explain why the pod is going to transition into a FAULT, and then the entire pod will be sent into a FAULT state.

Fiducial Monitor

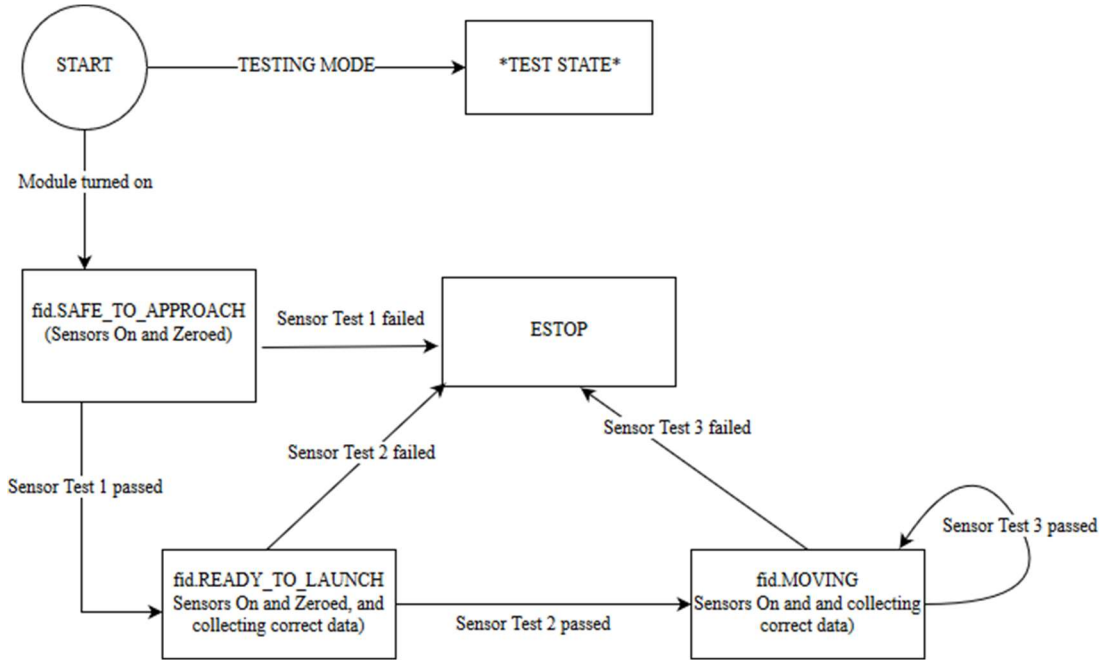

Figure 53. Fiducial Module state diagram.

States

1. START

The overall pod diagram in this state would be in the OFF state.

If the pod goes into Testing Mode, the module will enter the TEST state. Otherwise when the module is turned on, it enters fid.SAFE_TO_APPROACH.

2. Fiducial SAFE TO APPROACH

If the initial sensor test to verify all sensors are on and zeroed pass, transition to fid.READY_TO_LAUNCH. If initial tests fail, transition to ESTOP.

3. Fiducial READY TO LAUNCH

The fiducial module waits until it detects that the pod is moving and then switches to fid.MOVING. If any sensors return nonsensical data, transition to ESTOP.

4. Fiducial MOVING

In this state, the fiducial module constantly verifies its sensor data and if there is large variation, data not matching expected model, or a sensor failure, transition to ESTOP.

5. ESTOP

This state causes the pod to stop accelerating and the braking module goes into an ENGAGING state.

Overall Warnings (Warnings that could happen at any state)

- If sensor is showing variation (mild) then it should WARN
- If the sensor shows movement when there isn't, then it should go directly to WARN
- If data is not within prediction model, then WARN
- If there is high gyroscopic variation, then WARN and re-zero the sensor.
- If there is an increase in Stripe Count when not moving, then WARN and reset the stripe count.
- If retroreflective sensors do not return the same value (i.e. one returns positive, one returns negative) then WARN

Any warnings lead to a separate WARN state, that return the issue that lead to the warning in the first place, and identifies which sensor or actuator was responsible for the warning. If any warning is fixable (some software error that can be re-assigned, for example Stripe Count), then an attempt is made to fix it. However, if after recalibration multiple times, if that specific warning is causing many issues, then the Pod will call a Fault instead.

Overall Faults (Faults that could happen at any state)

- If there is a large disparity in movement between the free wheel encoder and the IMU the pod will go into the FAULT state.
- If any retroreflective sensor returns mismatch more than 3 times (or 2 times if within the last 1000 feet) then go to FAULT.
- If a sensor is not displaying any data or is unreachable (disconnected) then go directly into FAULT state.
- If the Stripe Count keeps increasing incorrectly after zeroing again, then go to FAULT.
- If these problems persist after re-calibrating the sensor, then go to FAULT.
- If the Data is significantly different than the predicted model for the run, then go to FAULT.

Any FAULT will send a warning to explain why the pod is going to transition into a FAULT, and then the entire pod will be sent into a FAULT state.

Motor Interface

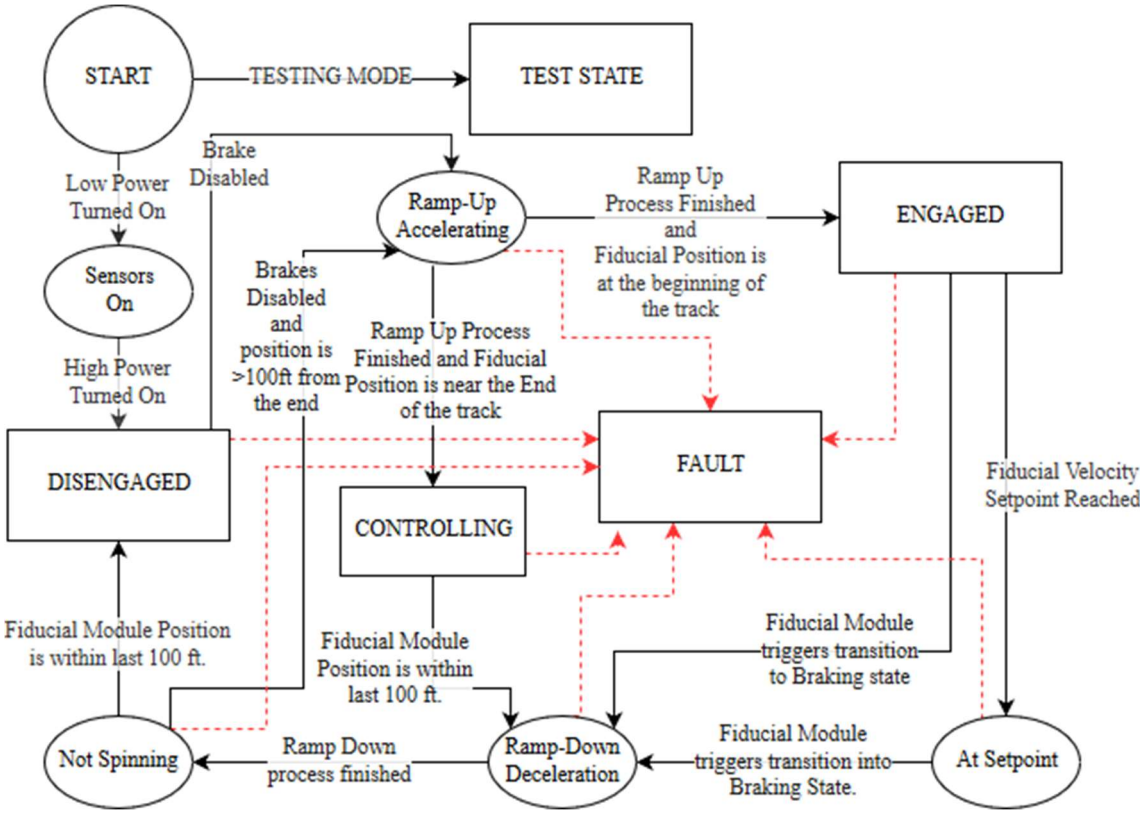

Figure 54. Motor interface module state diagram.

States

1. START - the initial state of the motor control; initializes the values for motor control, keeps the motor halted
2. Sensors On - establishes communication with the motor controller and enables high power
3. DISENGAGED – brakes are currently on and motor is stopped
4. Ramp-Up Accelerating - brakes are no longer engaged and pod begins to accelerate
5. ENGAGED - pod is moving at maximal speed
6. At Setpoint - pod is moving at the desired speed
7. Ramp-Down Decelerating - the stop is initiated and motor starts slowing down
8. Not Spinning - the motor is no longer spinning
9. CONTROLLING - wheel slippage is being controlled
10. FAULT - a fault has been triggered and must be disabled

Any fault from any step will lead to this state, from which a signal is sent out to send the rest of the pod into the EMERGENCY BRAKE state. Further faults and warnings are detailed below

Overall Warnings

- If slippage (the difference between the velocity given by the Motor Encoders and the velocity given by the free wheel Rotary Encoder in the Fiducial Module) is over a threshold limit, then go to WARN.
- If the Motor is overheating, then go to WARN.
- If the Motor is Undervoltage, then go directly to WARN.

Any warnings lead to a separate WARN state, that return the issue that lead to the warning in the first place, and identifies which sensor or actuator was responsible for the warning. If any of these warnings happen, the pod goes to the CONTROLLING state and reduce speed.

Overall Faults

- If slippage is significant, then go to FAULT.
- If the Motor is overheating significantly, then go to FAULT.
- If the motor voltage instability is outside the threshold range, then go to FAULT.
- In the case of motor control failure (motor not responding to control inputs), go to FAULT.
- If the CAN bus is inactive or offline, then go to FAULT.
- In the case of a Motor ramp-down failure, blow the pyro in the battery module, go to FAULT.
- In the case of motor drive failure (motor refusing to respond/spin), go to FAULT.
- If the Motor Controller Protections are inactive, it could lead to a potentially fatal fault.

Any FAULT will send a warning to explain why the pod is going to transition into a FAULT, and then the entire pod will be sent into a FAULT state.

Battery Management System

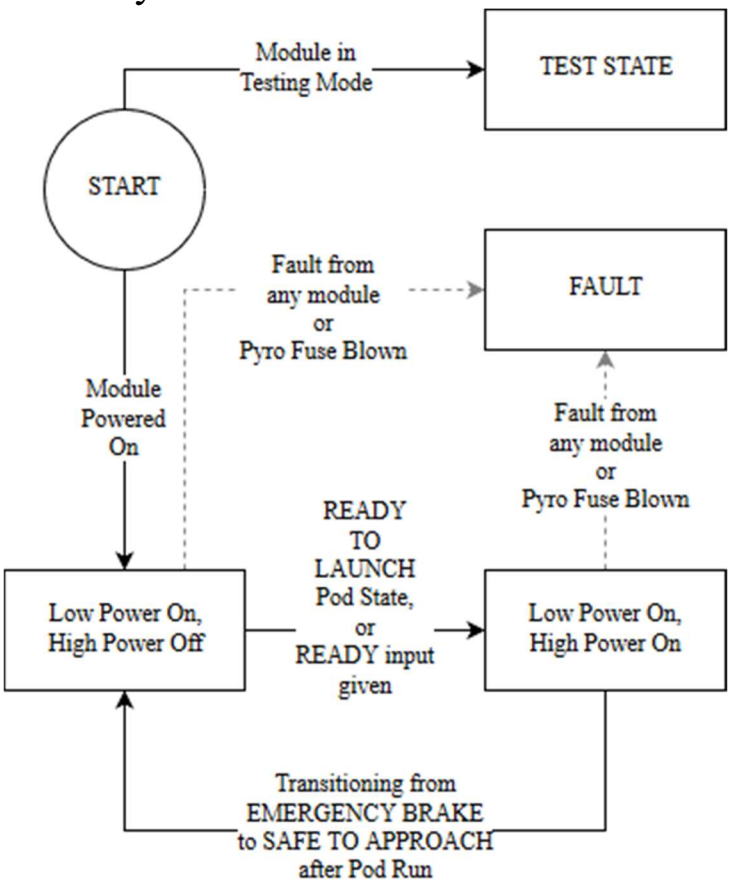

Figure 55. Battery interface module state diagram.

States

1. Start

The overall pod diagram in this state would be in the OFF state.

If the pod goes into Testing Mode, the module will enter the TEST state. Otherwise when the module is turned on, it enters fid.SAFE_TO_APPROACH.

2. Low Power On High Power Off – high power system is disabled but low power system is on
3. Low Power On High Power On - both low and high power systems are enabled
4. Fault - when a critical fault is detected on the powertrain

Any fault from any step will lead to this state, from which a signal is sent out to send the rest of the pod into the EMERGENCY BRAKE state. Further faults and warnings are detailed below.

Overall Warnings

- Low Battery Voltage within threshold limits, go to WARN
- Overvoltage within threshold limits, go to WARN
- Voltage Imbalance within threshold limits, go to WARN
- High Current within threshold limits, go to WARN

Any warnings lead to a separate WARN state, that return the issue that lead to the warning in the first place, and identifies which sensor or actuator was responsible for the warning. If certain warnings happen repeatedly, then the repeated warnings will trigger a Fault.

Overall Faults

- Low Battery Voltage outside threshold limits, go to FAULT
- Overvoltage outside threshold limits, go to FAULT
- Voltage Imbalance outside threshold limits, go to FAULT
- Pyro Blown, go to FAULT
- Over Current, go to FAULT

Any FAULT will send a warning to explain why the pod is going to transition into a FAULT, and then the entire pod will be sent into a FAULT state.

Details of TEST State

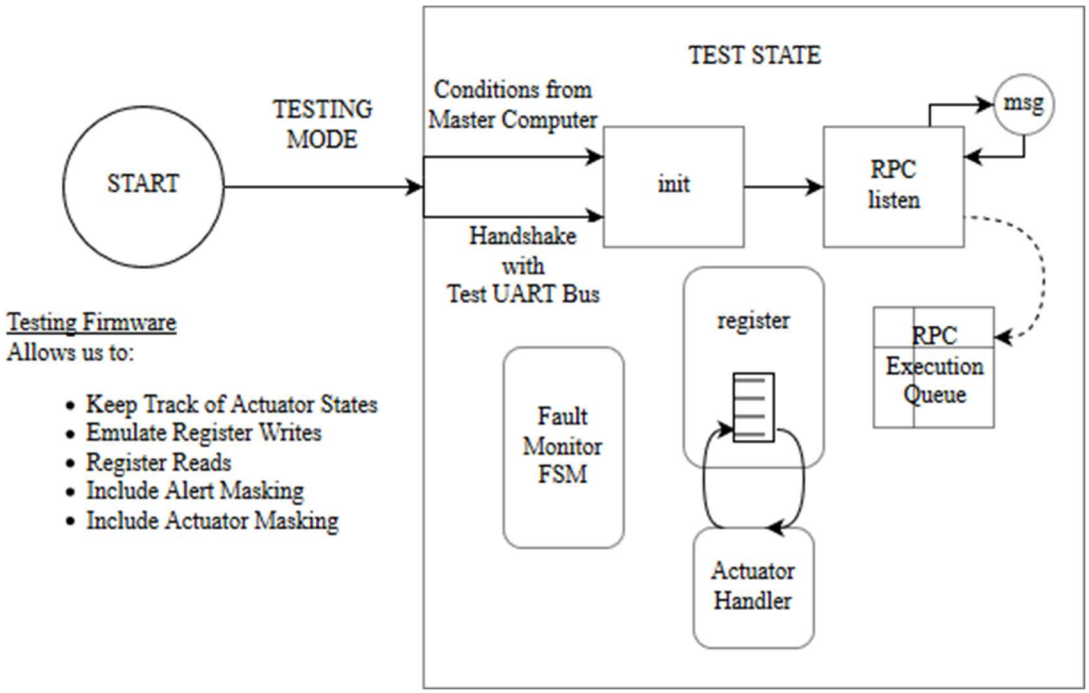

Figure 56. Detail diagram showing sub-states for the test state.

The TEST state is entered through either a condition from the Master Computer, or a handshake done with the testing UART bus. Once the TEST state is entered, it allows the module to: track actuator states, emulate register writes, read registers, have alert masking, and actuator masking.

This allows the module to be testing on an actuator level, on a software level, and the interconnectivity of this module to the main controller and other modules.

While the TEST state is entered, an RPC listen state is running continuously, and any message from the state is recorded in a 'msg' substate. The RPC listen is closely working to fill the RPC Execution Queue. This is working in parallel with the Fault Monitor Finite State Machine, and a register and Actuator Handler to allow Masking, and directly access the memory register. This TEST state works similarly for all modules.

Internal Communications

Each individual module will be connected to assorted sensors and actuators and will use analog and digital communications protocols to read and actuate these components. Electronic Control Units (ECU) will communicate to each other using a CAN protocol with frame schema defined specifically for each ECU. ECUs will communicate with each other to provide appropriate data for logic and control structures and alert each other asynchronously with alerts, warnings and faults.

The main types of messages broadcast by each ECU will be *status* messages, *data*, *alerts*, *warnings*, and *faults*. The latter three will be broadcast asynchronously when a certain unexpected condition is found by the pod state machines or commanded by the user.

Faults will have the highest level of priority, indicated by the lowest CAN identifier. Faults conditions being triggered will set the ECU into a Fault mode, and the ECU will prioritize its functionality to repair the fault if possible. If the fault is not repaired, certain conditions may result in complete pod shutdown. See the Safety Faults section at the end of this document for an individual description of each fault.

Warnings will have the next highest level of priority and will indicate worrisome conditions being detected by the pod, but not yet requiring full ECU prioritization of repairing the fault.

Alerts will contain information that must be asynchronously transmitted throughout the pod. The main use of these will be to relay ethernet signaling received by the base station from the master computer to the Pod ECUs over CAN. These signals will, for instance, place the pod into launching mode. An alert will then be broadcast over the CAN bus signaling all ECUs to prepare for Launch mode or to transition into an emergency stop state.

Of the synchronous messages, *status* messages transmitted over the CAN bus will contain the state and most critical information of each ECU, such as the major data values whose deviation can cause faulting in other ECUs. These messages will be transmitted with a specified frequency, and failure by each module to receive a status message will result in emergency routines to bring the pod to a halt.

Last in priority will be messages relaying important data, often in arrays containing multiple values. Among these will be Warning and Fault Arrays, which will contain bit packed structures indicating warnings and faults set by each ECU.

Below, tables are defined for CAN messages sent by each module over the drivetrain bus.

Motor Communication

Table XXIII. CAN packet descriptions. Note that all units are in bits.

Motor Ramp-down Warning/Fault	
Deviation from expected motor speed (RPM)	16
Motor ID	3
Set	1

Motor Warnings	
Stall	1
Slippage	1
Motor overheat	1
Under voltage	1
Ramp up	1

Motor Faults	
Stall	1
Slippage	1
Motor overheating	1
Under voltage	1
Brake Engagement	1
Ramp down	1
CAN fault	1
Drive failure	1
Motor stall	1
Motor disconnect fault	1
Encoder disconnect fault	1

Drive Failure Warning/Fault	
Motor ID	3
Set	1

Motor Stall Warning/Fault	
Motor ID	3
Motor torque	12
Motor voltage	12
Motor current	12
Set	1

Slippage Warning/Fault	
Current speed	16
Slippage error	16
Worst slippage motor ID	7
Set	1

Motor Overheat Warning/Fault	
Temperature	8
Motor ID	3
Set	1

Motor Under Voltage Warning/Fault	
Voltage	16
Motor ID	3
Set	1

Brake Engagement Fault	
Brake ID	3
Set	1

Motor Disconnect Fault	
Set	1

Rotary Encoder Disconnect Fault	
Set	1

Motor Status	
Master state	3
Substate	5
Max motor speed	16
Min motor speed	16
Max motor temp	8
Min motor voltage	16

Motor Speeds	
Motor 1 Speeds	16
Motor 2 Speeds	16
Motor 3 Speeds	16
Motor 4 Speeds	16

Motor Temperatures	
Motor 1 Temperature	8
Motor 1 Temperature	8
Motor 1 Temperature	8
Motor 1 Temperature	8

Motor Torques	
Motor 1 Torque	12
Motor 2 Torque	12
Motor 3 Torque	12
Motor 4 Torque	12

Motor Voltage	
Motor 1 Voltage	12
Motor 2 Voltage	12
Motor 3 Voltage	12
Motor 4 Voltage	12

Braking

Brake Status Messages	
Master state	4
Brake 1 substate	3
Brake 2 substate	3
Brake 3 substate	3
Brake 4 substate	3
Tank pressure	8
Brake controller min error	8
Brake controller max error	8
Brake controller min pressure	8
Brake controller max pressure	8
Brake controller min error	8

Braking Controller Warnings	
Low Tank Pressure	1
High Error	1
Zero Torque Deceleration Failure	1
Spatial Engagement	1

Braking Controller Faults	
Low Tank Pressure	1
CAN Fault	1
High Error	1
Zero Torque Deceleration Failure	1
Spatial Engagement	1
Air Tank Pressure Transducer Disconnect	1
Linear Transducer Disconnect	1
Pressure Regulator Disconnect	1
Pneumatic System Disconnect	1

Brake Controller Pressures	
Brake controller 1	8
Brake controller 2	8
Brake controller 3	8
Brake controller 4	8
Brake controller 5	8
Brake controller 6	8

Brake Controller Error Measurement	
Brake controller 1	8
Brake controller 2	8
Brake controller 3	8
Brake controller 4	8
Brake controller 5	8
Brake controller 6	8

Transducer Brake Engagement	
Brake 1 distance	3
Brake 2 distance	3
Brake 3 distance	3
Brake 4 distance	3
Brake 5 distance	3

Transducer Brake Engagement	
Brake 6 distance	3
Brake 7 distance	3
Brake 8 distance	3
Brake 9 distance	3
Brake 10 distance	3
Brake 11 distance	3
Brake 12 distance	3
Brake 1 state	2
Brake 2 state	2
Brake 3 state	2
Brake 4 state	2
Brake 5 state	2
Brake 6 state	2
Brake 7 state	2
Brake 8 state	2
Brake 9 state	2
Brake 10 state	2
Brake 11 state	2
Brake 12 state	2

Pressure Brake Controller Engagement States	
Brake controller 1 state	2
Brake controller 2 state	2
Brake controller 3 state	2
Brake controller 4 state	2
Brake controller 5 state	2
Brake controller 6 state	2

Air Tank Pressure Low Warning/Fault	
Air pressure	8
Set	1

High Brake Controller Error Warning/Fault	
Brake ID	3
Error	8
Set	1

Zero Torque Deceleration Warning/Fault	
Acceleration error	8
Set	1

Spatial Engagement Failure Warning/Fault	
Brake ID	3
Desired position	2
Actual position	2
Set	1

Air Tank Pressure Transducer Disconnect Fault	
Set	1

Brake Linear Transducer Disconnect Fault	
Brake ID	3
Set	1

Brake Pressure Regulator Disconnect Fault	
Brake controller ID	3
Set	1

Brake Controller Pneumatic Disconnect Error	
Brake controller ID	3
Set	1

Battery

Battery Interface Faults	
Low voltage	1
High voltage	1
Voltage imbalance	1
Pyro blown	1
Over current	1
Contactor welded	1
Isolation failure	1
High temperature	1
High temperature imbalance	1

Battery Interface Warnings	
Low voltage	1
High voltage	1
Voltage imbalance	1
High current	1
Contactor welded	1
High temperature	1
High temperature imbalance	1

Low Voltage Warning/Fault	
Battery pack ID	3
Voltage	12
Set	1

High Voltage Warning/Fault	
Battery pack ID	3
Voltage	12
Set	1

Voltage Imbalance Warning/Fault	
Battery pack ID	3
Max cell imbalance	12
Min cell voltage	12
Max cell voltage	12
Pack voltage	12
Set	1

Pyro Blown Fault	
Battery pack ID	2
Reason	8
Voltage	12
Current	12
ID	2
Set	1

High Current Warning	
Battery pack ID	2
Current	12
Set	1

Overcurrent Fault	
Battery pack ID	2
Current	12
Set	1

Contactor Welded Fault	
Contactor ID	3
Set	1

Isolation Fault	
Battery pack ID	2
Pack side (Low/High)	2
Resistance	12
Set	1

Temperature Warning/Fault	
Battery pack ID	2
Thermistor ID	4
Temperature	8
Set	1

Temperature Imbalance Warning/Fault	
Battery pack ID	2
Thermistor ID	4
Temperature	8
Pack average temperature	8
Set	1

Battery Pack Voltages and Currents	
Battery pack 1 voltage	8
Battery pack 2 voltage	8
Battery pack 3 voltage	8
Battery pack 4 voltage	8
Battery pack 1 current	8
Battery pack 2 current	8
Battery pack 3 current	8
Battery pack 4 current	8

Battery status	
Battery pack min voltage	8
Battery pack max voltage	8
Battery pack min current	8
Battery pack max current	8
Battery pack max voltage imbalance	8
Battery pack max temperature imbalance	8
Battery pack max temperature	8
Battery Pack 1 State	2
Battery Pack 2 State	2
Battery Pack 3 State	2
Battery Pack 4 State	2

Battery Pack Voltage Imbalances	
Battery pack 1 max cell imbalance	8
...	...
Battery pack 4 max cell imbalance	8

Battery pack Min Max Voltages	
Battery pack 1 min cell voltage	8
...	...
Battery pack 4 min cell voltage	8
Battery pack 1 max cell voltage	8
...	...
Battery pack 4 max cell voltage	8

Battery Pack Max Temperatures	
Battery pack 1 max cell temp	8
...	...
Battery pack 4 max cell temp	8
Battery pack 1 max cell temperature imbalance	8
...	...
Battery pack 4 max cell temperature imbalance	8

Battery Pack Contactor States	
Battery contactor 1 state	3
...	...
Battery contactor 8 state	3

Fiducial

Fiducial Status	
Distance traveled	12
Fiducial state	4
Acceleration	8
Velocity	8
Stripe count	8
Distance from end	12
Flywheel acceleration error	8

Fiducial Faults	
Position model mismatch	1
Velocity model mismatch	1
Acceleration model mismatch	1
Acceleration sensor mismatch	1
Rotary encoder disconnect	1
Laser distance sensor disconnect	1
Retro-reflective sensor disconnect	1
IMU disconnect	1
Accelerometer shake	1
Distance from end too low	1
Crawl distance too low	1

Fiducial Warnings	
Position model mismatch	1
Velocity model mismatch	1
Acceleration model mismatch	1
Acceleration sensor mismatch	1

Position Model Mismatch Warning/Fault	
Estimated position	12
Actual position	12
Set	1

Velocity Model Mismatch Warning/Fault	
Desired velocity	8
Actual velocity	8
Set	1

Acceleration Model Mismatch Warning/Fault	
Desired Acceleration	8
Actual Acceleration	8
Set	1

Acceleration Sensor Mismatch Warning/Fault	
Flywheel acceleration	8
Accelerometer acceleration	8
Set	1

Rotary Encoder Disconnect Fault	
Set	1

Laser Distance Sensor Disconnect Fault	
Set	1

Retro-Reflective Sensor Disconnect Fault	
Set	1

IMU Disconnect Fault	
Set	1

Accelerometer Shake Fault	
Accelerometer shake magnitude	8
Acceleration	8
Set	1

Distance From End Too Low Fault	
Distance from end	12
Velocity	8
Acceleration	8
Set	1

Crawl Distance Too Low Fault	
Distance from end	12
Velocity	8
Acceleration	8
Set	1

Master Computer

Master Computer Status	
Current Master Pod State	4
Test Routine Substate	8

Pod Stop Request Alert	
Set	1

Pod E-Stop Alert	
Set	1

Pod Start Alert	
Set	1

Pod Loaded Alert	
Set	1 bit

Pod Unloading Alert	
Set	1 bit

External Communication Fault	
Set	1

External Communications

Every module and battery controller will have a UART port meant for debugging. During normal communications, the only module that communicates external to the pod is the master computer. The master computer aggregates information from the other modules and sends regular telemetry packets over UDP both for the prescribed Hyperloop telemetry packet and a custom one for use by the control software. Similarly, the master computer will listen for special UDP control packets that allow limited control of the pod's state. Control packets are used to tell the pod to start its run as well as to manually initiate a stop or emergency stop. The manual stop and emergency stop UDP control packets are a backup measure. All automated stopping procedures are performed on-pod and are tolerant to loss of connectivity to the control software.

External Pod Monitoring

Sample Pod Health (Ready to Launch)	
Field	**Min**
int32_t pod_status	2
unit32_t timestamp (milliseconds)	0
int32_t position	0

Sample Pod Health (Ready to Launch)			
Field	**Min**	**Actual**	**Max**
int32_t acceleration (m/s^2)	0	0	14.7
int32_t velocity (m/s)	0	0	0
int32_t battery_voltage (V)	127	127	127
int32_t battery_temp (C)	5	37	52
int32_t pod_temp (C)	20	37	45
int32_t tank_pressure (psi)	110	82	148
int32_t brake_pressures[] (psi)	90	82	110

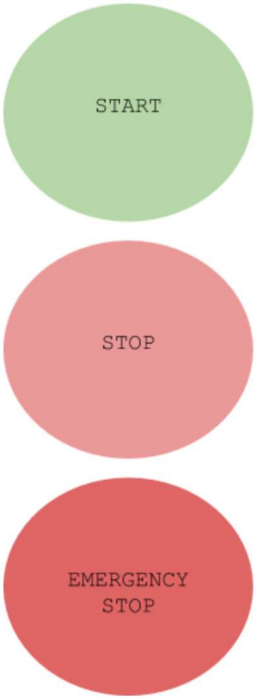

Figure 57. External pod health viewer sample UI.

Below is a diagram of the onboard network of the pod used for communication for the Master Computer and Hyperloop's Arduino to the Track network. A Ubiquiti Rocket M900 is used for communication with the track's stationary network.

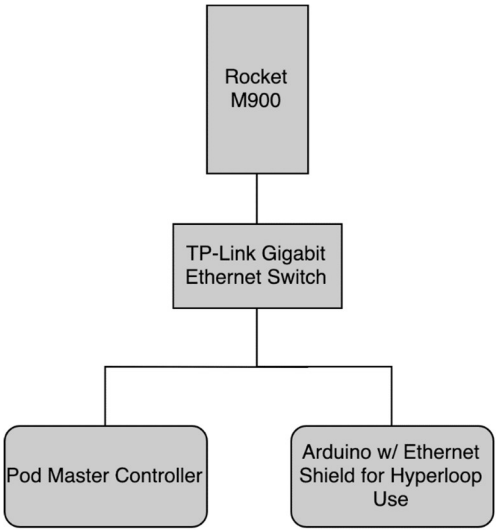

Figure 58. Onboard network flowchart.

Cabling Diagrams

High Voltage Cabling

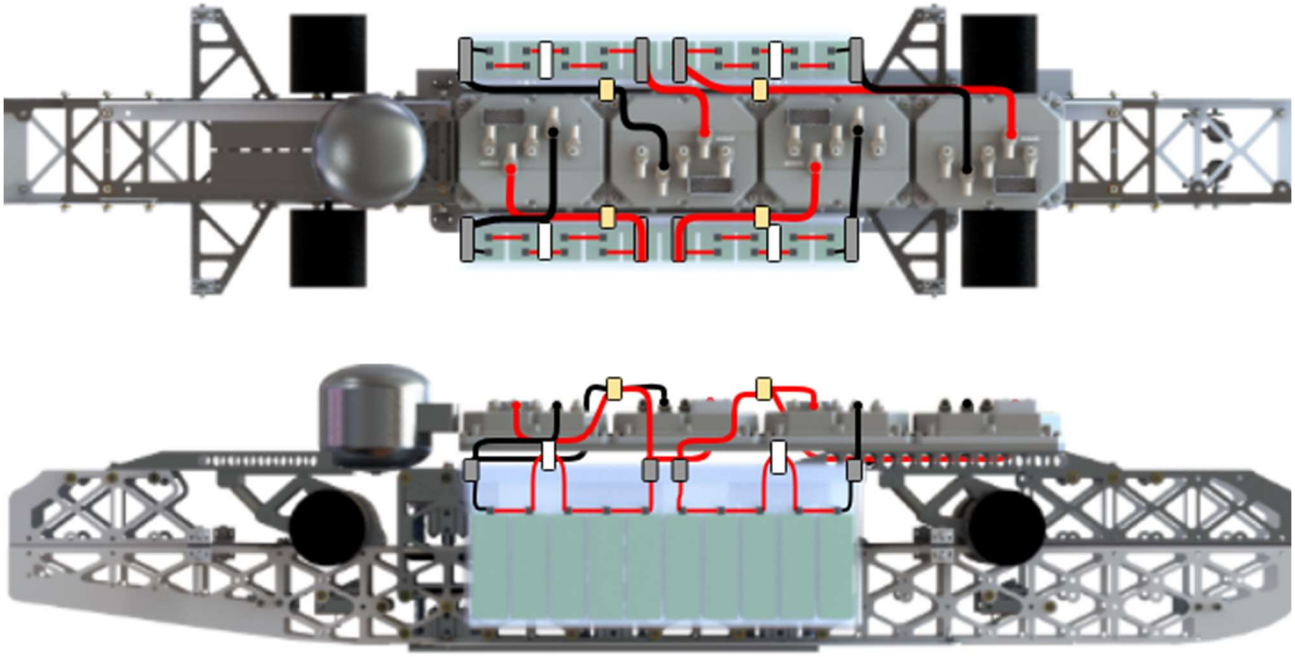

Figure 59: High voltage cabling in pod.

Figure 60: High voltage cabling legend.

High Voltage Diagram

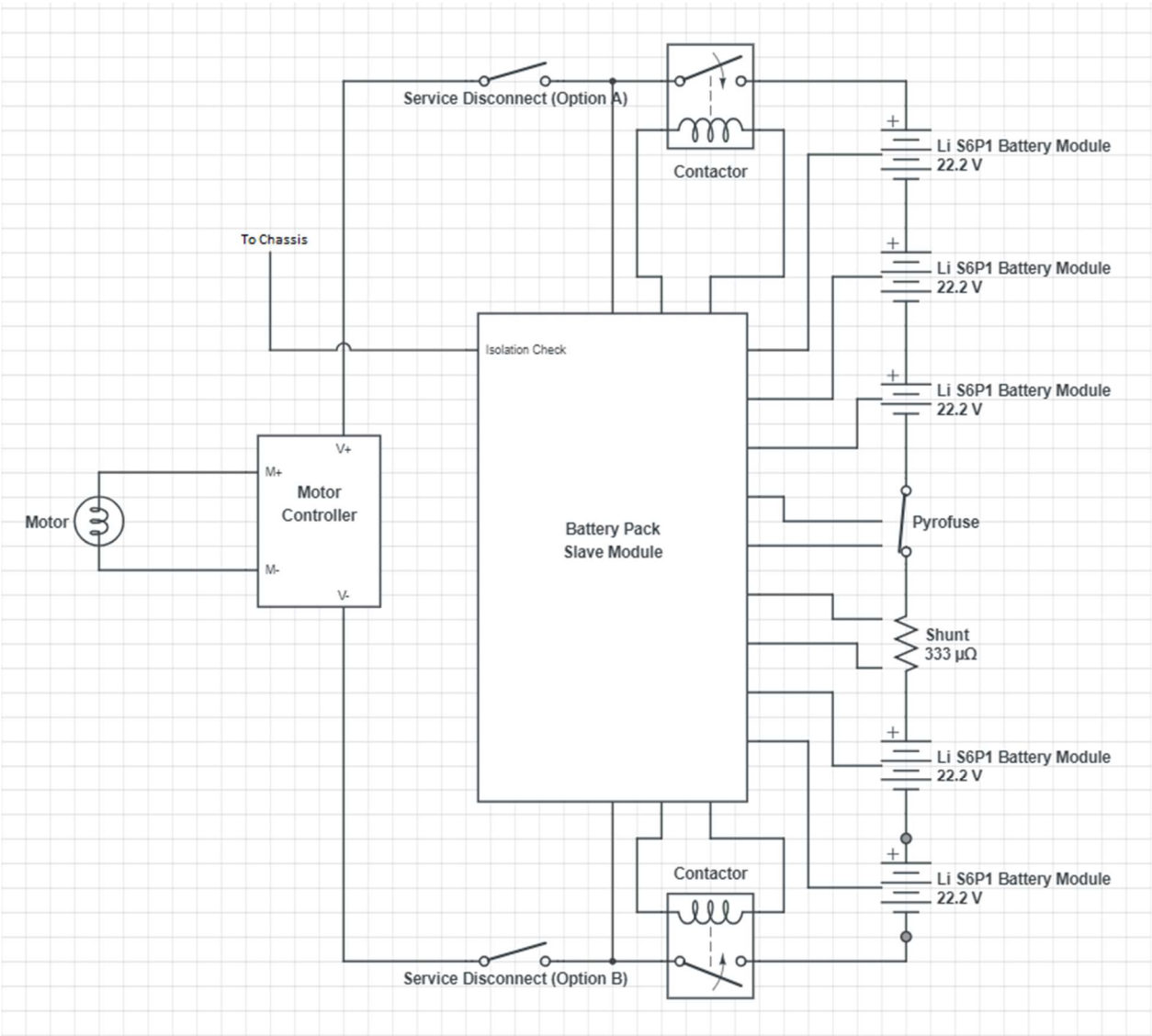

Figure 61: High Voltage System Diagram

6. Scalability of the Pod Design

System Size

Increased tube length

Since the motors' max rotational speed under any conditions is 25000 RPM, the pod's theoretical maximum velocity in a tube of a longer length using the pod's current propulsion setup would be about 130 m/s. In order to increase the pod's maximum velocity in a longer tube, either the diameter of the driven wheels could be increased, or motors with a greater max rotational speed could be incorporated.

Increased tube diameter

An increased tube diameter will decrease vehicle drag slightly due to less boundary layer interference effects being present. Any stationary surfaces are be further from the pod, giving the air upstream more space to compress into, therefore lowering the stagnation pressure at the pod's nose. This will cause a small, but possibly significant decrease in vehicle drag. Further CFD simulation would need to be performed to numerically validate this qualitative conjecture.

Increasing pod length

Increased pod length would provide for better aerodynamics even if it raises the drag coefficient slightly. Mass could be approximated as scaling linearly with increased pod length, while drag will only increase due to slightly higher skin friction, while pressure drag will remain approximately the same. This is akin to an increase in ballistic coefficient, defined in Equation 5.

Equation 5: Physics ballistic coefficient: effectively a measure of the pod's coasting efficiency. Note that a higher BC would provide better aerodynamic efficiency, while not necessarily changing drag coefficient.

$$BC_{Physics} = \frac{M}{C_d \cdot A}$$

Increasing pod cross-sectional area

Increasing vehicle cross-sectional area linearly increases drag, which will reduce vehicle top speed. If the area is large compared to the air bypass area, the Kantrowitz limit may be reached. This is discussed in more detail in the Kantrowitz limit and analytical CFD validation section.

Cost & Maintenance

Consumables

Consumable components on the pod include brakes pads, wheels, and batteries. The depth of the brake pads was purposely oversized to improve longevity. However, physical testing will have to be performed to determine brake pad wear rate. The driven wheels will have to be replaced periodically due to the constant stress applied due to the torque of the motors. The smaller secondary stability wheels, however, will not require replacement as frequently because they only have to accommodate vibrational loads. To facilitate replacement of the batteries, the battery modules will be easily disconnected from the system, and the battery enclosure will be easily opened and closed.

Maintenance

The modular design of all the subsystems and subassemblies enable a flexible and robust design that allows subsystems to be swapped out when maintenance is required for consumable components.

If entire subsystems need to be swapped, the superstructure mounted on the chassis allow for entire sections of the pod to be swapped out using standard hex keys and wrench.

If smaller subassemblies on subsystems need to be swapped, the wheel spring-rocker subassemblies can be removed and attached using standard hex keys and wrench. Individual battery modules can be replaced due to the use of standard XD150 connecters. Individual brake subassemblies can also be removed and attached using standard hex keys and wrench.

7. Loading & Unloading Plan

Pod Transportation from Staging Area to Hyperloop Test Track

Figure 62. Pod on transportation sled with top aeroshell stored in the sled.

To bring the pod from the staging area to the test track a custom-built sled will be used. The sled is made of two parts: the cart and the carrying assembly. The pod sits on an I-beam resembling the one in the track, with the brakes applied to keep it from moving. This assembly can be moved by 4 people by lifting on the two cross-members at each end. For any non-walkable distances, the lifting assembly can be rested on top of the cart and will be held in place by four removable pins. Movement of the assembly is restrained by both the wooden panel at the top, and cargo straps that can be routed through holes in the wooden panel.

To load the pod onto the track, the cart will be pushed next to the Loading Platform, and the cargo straps will be released. Four team members will lift the pod off the cart and carry it onto the loading platform. Once there, the cross members of the carrying assembly will be unbolted, and the I-beam set on the wooden floor. The pod will be pushed to the alignment rail. Once aligned, the pod will be pressurized, which will release the brakes. It can then be pushed from the carrying I-beam onto the alignment rail. Once there, the top half of the aeroshell will be attached with quarter-turn fasteners. The carrying assembly will be removed from the loading area.

To lift the pod from rest on a table to the carrying assembly, 4 custom lifting straps will be manufactured. These will be made of cargo strap, a carabiner hook, and a handle for lifting. The top of the aeroshell will have to be removed and placed on the bottom of the cart. The carabiners will be attached in all 4 corners, by hooking into the slotted aluminum frame. One slot was chosen as seen in Figure 63.

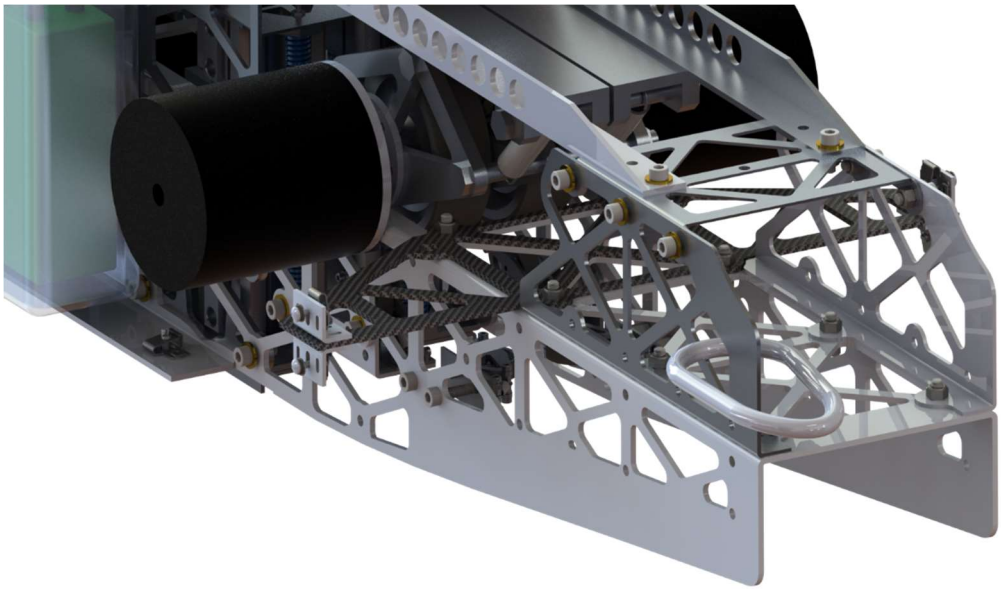

Figure 63. Pod with carabiner for manual transportation.

Pod Transportation from Hyperloop Test Track to Exit Area

Similarly to how the pod will be loaded, the unloading process will involve the same custom carrying assembly. The carrying assemblies' I-Beam will be aligned to the end of the track's I-beam. Then the pod will pressurize the brakes, releasing them from the track's I-beam, and the pod will be rolled onto the team's I-beam. Once the pod is completely on the transportation I-beam, the brakes' pressure will be released, locking them. The Pod can then be lifted onto the cart to be brought to the exit area or loaded onto a truck with only the carrying assembly, if it needs to be driven. It can be secured with cargo straps there.

Ready-to-Launch Checklist/State

1. Velocity is zero
2. Brakes are engaged
3. Keep low power mechanisms on (sensors and circuitry)
4. Run self-test:
    a. Faults are not detected
    b. Able to communicate with all sensors and motor controller
    c. Sensors reading correct values
    d. All pyros are intact
    e. All of our battery packs are within an acceptable voltage range
    f. Able to open and close battery contactors
    g. Able to disengaged and re-engage brakes
    h. All of our fiducial readings are zeroed
    i. Can communicate with SpaceX network via ping
    j. Re-check for no faults

Ready-to-Remove Checklist/State

Before approach

State reads SAFE_TO_APPROACH

a. Velocity is 0 (confirmed on external health viewer)
b. All high-power systems disabled (confirmed on approach below)
c. Low-power mechanisms (sensors and circuitry) stay on
d. Brakes are engaged

On approach

Ensure battery status LEDs show high-power system is disconnected

a. Green light on, showing that the high-power system is not shorted to the chassis
b. Red light off, showing the high-power system

After approach

After approaching, pod is turned off and turned on manually, sending the pod to LOAD/UNLOAD. Turning off the pod maintains the above states with low-power off. Turning the pod on again puts it into LOAD/UNLOAD, which turns on the low-power system and disengages the pod.

State reads LOAD/UNLOAD

a. Velocity is 0
b. All high-power systems disabled
c. Low-power mechanisms (sensors and circuity) are on
d. Brakes are disengaged

9. Safety Related Features

Stored Energy on the Pod

Pressure Vessel

Stored energy will be present in the air tank in the form of compressed air. This 1.9 L air tank pressurized to 1 MPa will store 4.3 kJ of energy.

Batteries

For each of the 20 battery modules, 3000 mAh of energy is stored. This equates to a total of 60000 mAh of stored energy in the pod's batteries.

List of Hazardous Materials

The only hazardous material included in the pod's design are the Li-Po battery cells. To mitigate the risk of Li-Po battery combustion, the batteries will be submerged in mineral oil as a coolant to prevent excessive temperature increases. If the batteries do happened to combust, however, the battery enclosures in which the batteries are stored will minimize damage to surrounding components.

Description of Safety Features

Overview

The pod is designed with safety as a major priority. Sensors of a wide variety are used throughout the pod to prevent any type of damage to the tunnel or pod. Ensuring the pod stops appropriately in the tunnel, monitoring its navigation path on the track, and maintaining a safe operating temperature are prominent safety concerns that are accounted for throughout the pod.

The pod stopping conditions are handled by sensor data unless there is an emergency condition that is met in the pod. The rotary encoder, located on the fly wheel towards the rear of the pod, is the primary, reliable sensor to indicate the distance the pod has travelled in the tunnel. It will be used in tandem with the two retro-reflective sensors (for redundancy) located on the top of the pod. These two sensors can be used to calibrate each other to provide reliable readings. For example, if the rotary encoder indicates that the pod has traveled roughly 100 more ft. than the retro-reflective sensors indicate, then the distances traveled are calibrated to be that of the rotary encoder. In this case, it would be a safer value because it is a safe assumption that the retro-reflective sensors could have missed a piece of tape during the run. In addition to the rotary encoder and the retro-reflective sensors being the primary means of handling stopping conditions based on distance traveled, a laser distance sensor at the front of our pod can detect the end of the tube. The laser sensor is tended for distance measurement from the end of the tube during the CRAWL phase of the mission profile. Along with autonomous state machine conditions for stopping the pod, a user will be able to put the pod into an emergency stop state at any point from the base station.

Along with the means of monitoring the pod's position in the tunnel, in order to ensure safe braking, the pressure of the air tank will be monitored with a transducer. While no issues with air tank pressure are anticipated, any leak could be catastrophic to braking ability. If the tank pressure begins to drop unexpectedly, the emergency stop state will be activated to prevent any damage to the pod or the tunnel.

The major safety concern regarding excessive vibration forcing the pod off the track is handled by the IMU at the center of mass of the pod. The IMU will be used to detect vibration or other inappropriate forces causing the pod to not follow the path of the tunnel. If excessive forces are detected, the pod will enter the emergency stop state, which will lead to a signal being sent to ramp the motors down (to prevent motor damage) while simultaneously applying the brakes.

Temperature sensors are located throughout the pod to prevent component damage to ensure the safety of the pod and tunnel. There are 45 total temperature sensors throughout our pod. There are 10 per battery pack and four total battery packs as indicated on the sensor overview diagram. Two thermistors are present on each cell for redundancy purposes. If the batteries overheat, the emergency stop state is entered to avoid excessive damage and safety risks. There is also one thermistor per motor. The thermistor probes the motor in order to maintain safe operating conditions and prevent motor damage. Lastly, there is a sole temperature sensor in the pod to measure ambient temperature throughout the pod. The vast sensor presence throughout the pod protects pod components and SpaceX equipment from damage.

Hardware and software inhibit on braking during acceleration

In the event of a brake deploying in the acceleration phase, the Motor Interface Module will detect a high torque impulse and retrieve brake engagement information from the braking module. This fault will cause the motor to transition into a halting routine and fire the pyro disconnect. The Braking Module will detect brakes malignantly deploying in the Launching or Coasting states, and adverse brake engagement (as detected by the linear transducers) will result in a fault that will attempt to disengage brakes and upon failure will cause motors to stop.

Uncontrolled acceleration by the motor, on the other hand, will cause a fault that will command the pyro to fire and the brake solenoid valves to open, thus stopping the motors.

Mechanisms to mitigate a complete loss of Pod power

Upon loss of the HV system power, the low power system shall be able to properly open contactors, blow the pyro fuse, apply brakes, open HV contactors, and perform all of the necessary functions to bring the pod to a safe state. This will then permit approach by a team member in the tunnel to detach the manual service disconnect, pressurize and disengage the brakes manually if necessary, and wheel out the pod from the tunnel. In case of net system loss, where the low voltage system is unable to be powered, lack of power will automatically engage the pneumatic brake solenoid valves, thus forcing an immediate pod halt.

Mechanisms to mitigate a pressure loss

If the brakes experience a pressure loss mid-run, the pod will experience no adverse effects because the pod will automatically brake at full force and bring the pod safely to a stop due to the braking system's pneumatic-release, spring-applied design. In order to avoid damaging the motors in this situation, the braking sensors will detect the sudden loss of pressure and trigger the fault state, which will safely reduce motor power to zero. For the air tank to rapidly depressurize, a pressure regulator and a solenoid valve both have to fail ensuring there is a dual fault tolerance.

Pod robustness to a tube breach resulting in rapid pressurization

As our test plan does not include depressurizing the tube, there is no risk of rapid re-pressurization since we plan on running the pod at 1atm.

Fault tolerance of braking, levitation, and other subsystems

The rounded leading edge of the brake pads can accommodate track deviations up to 7.5 mm. Greater deviations will cause excessive wear to the brake pads and decrease effectiveness of braking.

Single point of failures within the Pod

The main structural points of failure are the brackets which support each braking module. These have no redundancy but have been thoroughly analyzed in the Deceleration due to braking section. The pneumatic hose leading out of the pod's air tank also presents a single point of failure because if a leak became present in this part of the pneumatic system, all stored pressure would be lost. However, because the brakes are spring-applied, the pod still has the capability to safely come to rest.

Recovery plan if Pod becomes immovable within tube

In the event of a power loss, the pod will be commanded to isolate the High Voltage system from the rest of the pod; should this fail and contactors become opened, the pyro disconnects will fire, therefore deactivating any motion capability. In this emergency state, the solenoid valves will automatically switch to the open position. This vents the pressure from the brake cylinders through the secondary tubing, which leads from the cylinders to the surroundings. Since there will no longer be air pressure holding the brakes in the released position, the brakes will then apply full force and bring the pod to a halt. In this scenario, the pneumatic cylinders must be re-pressurized using a secondary pressure source in order to release the brakes and remove the pod from the track. A compressor will be brought to the pod to attach to the secondary tube and re-pressurize the cylinders. This emergency pressure will be passed through a check valve that will be left attached to the secondary tube, holding the cylinders at pressure while the pod is removed from the track.

Implementation of the Pod-Stop Command

Two stop commands will be available, the Stop and EStop commands. Both commands will be initiated by the user interface on the base station computer, and the EStop will be especially visible and easy to click. These commands will be transported as UDP packets to the master computer, which will then initiate a Braking or Fault stop state throughout the embedded systems. This message will be output on the CAN bus, and systems will then prepare their deceleration accordingly.

The Stop will result in a clean stop of the pod, provided that enough distance exists until the end to satisfy a clean deceleration ramp-down and stop in our trajectory model. The motors will ramp down to 0 torque; at low torque, brakes will be engaged. Upon full halt, as detected by the fiducial module, the HVS will be disconnected, lest the pyro be blown. The pod will then transition into the unloading state.

In the case of the EStop command being received, immediate motor stoppage and emergency brake cylinder depressurization will follow. The pod master state will transition into Fault, the motor will immediately step to 0 torque, and brakes will be engaged. Should motor control of the deceleration fail to execute in a timely manner, the pyro disconnect will be blown by the Battery Master Module. Once it has come to a halt, the pod will attempt to open contactors and transition into the Unload Mode.

Battery Safety Features

The pod has four independent battery packs with separate monitoring and controllers. Recall that each battery pack has 5 pre-fabricated battery modules.

The battery modules are unmodified except the stock XT90 connectors have been replaced with XT150 connectors. These connectors have a higher current rating and allow the battery modules to be connected directly in series. The XT150 is a gendered connector that prevents a battery from accidentally being connected in reverse. Specifically, the designation of the male connector to the positive side of each battery module and female connector to the negative side of each battery module is used.

Each battery module has two thermistors attached that are used to track temperatures across the battery pack. High temperatures trigger a warning and eventually a fault if temperatures approach unsafe levels. Large deviations in temperature will also trigger a warning and eventually a fault. The warnings and faults contain measured temperature and thermistor id so that issues can be tracked down to a specific battery module. The battery modules will be submerged in mineral oil as a coolant to help dissipate heat from the batteries. Mineral oil was selected as the coolant because its dielectric properties reduce the risk of short-circuiting.

Each battery pack has a controller that is responsible for managing the pack. The controller balances each cell in the pack during charging to ensure minimal deviation in cell voltages. Balancing is not performed during the pod's operation, but a voltage imbalance warning and eventually fault are issued if a large cell voltage imbalance occurs. Low voltage warnings and faults are issued as well if the pack voltage drops too low. High voltage warnings and faults are also implemented for symmetry however the pod is meant to be started from a full charge and pack voltage is not expected to increase above the full charge voltage during the run.

Battery pack current is measured using a shunt that is in the middle of the pack. A high current warning will be issued if more current than expected is drawn from the batteries, and an overcurrent fault will be issued if current draw approaches unsafe levels.

While warnings and faults are issued over CAN, the battery controller is fully capable of disconnecting the batteries if a major issue occurs including the CAN bus becoming inoperable. First the contactors are opened. If the contactor disconnect fails due welding, the battery controller will blow a pyrofuse that is located between the second and third battery module. An emergency disconnect button will be located on the back of the pod that also blows the pyrofuses in case the pod is unresponsive and the batteries need to be disconnected for safety.

Isolation from both the positive and negative side of the battery packs to the chassis is monitored by the battery controller. If an electronic isolation fault occurs, an isolation fault message is issued over the CAN bus, and the pyrofuses are blown. Isolation Fault Detection is described further in later sections.

10. Isolation Fault Detection System

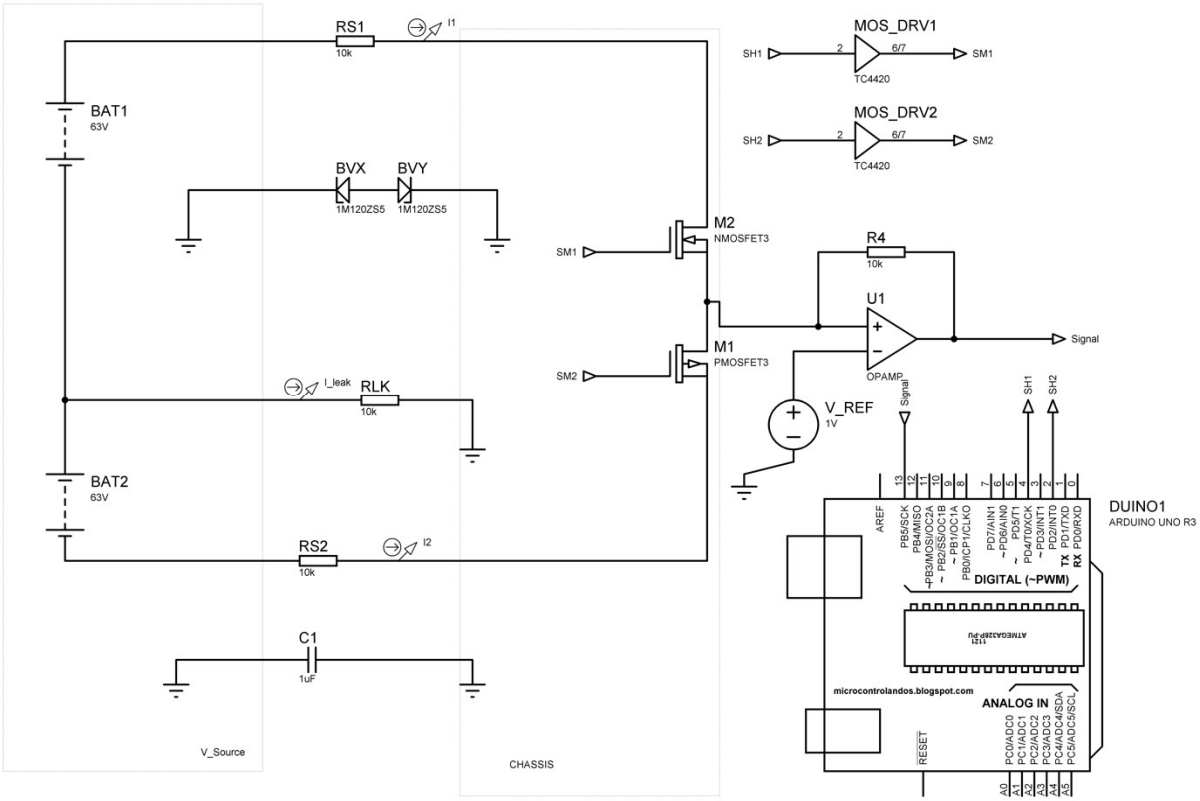

Figure 64. Schematic of voltage source chassis fault detection.

A major safety requirement involves monitoring the isolation between the chassis and high voltage system. The above figure contains a schematic representation of a high-volt DC electrical system employing a fault detection system. A detection module is connected to the positive terminal of battery through a first switch and a first resistor. The detection module is also connected to the negative terminal of battery through a second switch and a second resistor. In operation, the switches are sequentially opened and closed under the control of fault detection module. First and second resistors, are large-value resistors, typically on the order of 1 mega ohm or greater. Preferably, the resistance values of resistors are equal. The system includes an over-voltage protection device: Zener diodes. In the figure, parasitic resistance in the system is represented by resistor R_leak. Ideally, the value of resistance is very large, on the order of mega ohms. Capacitor represents the inherent capacitance in the system existing between the battery section and the vehicle chassis ground.

When switch is closed at time T0, current flows through resistor and switch until the inherent capacitance is charged. As inherent capacitance is charged, the value of I declines, approaching Zero, reflecting the large value of resistor. Module includes a microprocessor and an associated non-volatile memory. Non-volatile memory is programmed with instructions dictating the frequency at which switches are sequentially cycled, the frequency at which currents I and I are sampled and threshold values for indicating a fault. Microprocessor controls the operation of switches and via a switch output driver control. The values of I are measured using a current sensor

circuit. The trans-impedance programmable amplifier essentially represents a current measurement of an input (IN) as a Voltage output (V). The output of programmable gain amplifier is received by an analog to digital converter (micro-controller) which converts the voltage output signal to a digital output.

The value of parasitic resistance may be determined as follows.

$$I1 = \frac{V1 - VR}{RS1 + Rlk}$$

$$I2 = \frac{V2 - VR}{RS2 + Rlk}$$

$$I1 - I2 = \frac{VBATT}{RS2 + Rlk}$$

Using this, the value of I_{leak} can be determined as:

$$I_{leak} = VBATT/Rlk$$

If the digital controller determines that the current is greater than a predetermined value, such as 1 milliamp, the digital controller will instruct the communication interface to communicate a fault signal.

Pod Faults

The embedded communications are designed such that asynchronous alerts, warnings, and faults can urgently alert the rest of the system of dangerous conditions or failures. Alerts and warnings will communicate adverse conditions or urgent matters to the rest of the Faults, however, will always be raised then the issue is of primary importance to the device's operation, and will force the embedded module to forego all performance objectives to safely handle the fault, Depending on the fault's nature, these fixes can vary from less extreme operation and simpler control to halting the pod and even deploying the worst-case safeguards of blowing the pyro and opening the pressure to the brake cylinders, thus engaging the brakes.

Table XXIV. Listing of faults, their descriptions, and their handling.

Fault	Cause	Primary Handling	Emergency Handling
Motor_RampDownFault	Motor fails to ramp down following the desired deceleration	Order rapid motor ramp-down	Blow the pyro fuse
Motor_CanFault	The motor fails to contact critical module on CAN bus	Stop motor immediately	Blow pyro fuse
Motor_DriveFailure	Motor fails to respond to commands	Stop motor immediately	Blow pyro fuse
Motor_StallFault	Motor fails to properly revolve and faces maximal torques	Stop pod operation, begin motion again	Bring motor to a stop, terminate course
Motor_SlippageFault	Difference in rotation detected between motor encoder and free wheel encoder	Slow down RPM and accelerate in more controlled fashion	Bring motor to a stop, terminate course
Motor_OverheatFault	If for a continuous time a motor overheats	Lower motor torque	Bring motor to a stop, terminate course
Motor_UnderVoltage	If motor inputs detect low voltage due to voltage drops from wire heating	Lower motor torque / current	
Motor_BrakeEngagementFault	Brakes engage during active motor operation	Stop the motor; order brakes to disengage	Blow pyro fuse

Fault	Cause	Primary Handling	Emergency Handling
Motor_MotorDisconnect	Motor control interface becomes disconnected	Blow pyro fuse; fully engage brakes	
Motor_EncoderDisconnect	Motor encoder becomes disconnected	Blow pyro fuse; fully engage brakes	
Brake_LowTankPressureFault	Braking tank pressure drops below 90 PSI	Bring pod to a stop; engage brakes	Open emergency brake valves
Brake_CanFault	When brakes fail to communicate with critical pod systems	Bring pod to a stop; blow pyro; open emergency brake valves	
Brake_HighErrorFault	When feedback pressure significantly exceeds error margin from setpoint pressure	Reset setpoint to current pressure level; change level from this	Open emergency brake valves
Brake_ZeroTorqueDecelFault	Brakes fail to properly engage in zero torque deceleration	Open emergency brake valves	
Brake_SpatialEngagementFault	Brakes stuck in position, as measured by linear transducer, despite being commanded to move to another position	Open emergency brake valves; halt pod; deactivate HV system	

Fault	Cause	Primary Handling	Emergency Handling
Brake_AirTankPressureTransducerDisconnect	Air pressure transducer is disconnected	Open emergency brake valves; halt pod; deactivate HV system	
Brake_LinearTransducerDisconnect	Linear transducer is disconnected	Open emergency brake valves; halt pod; deactivate HV system	
Brake_PressureRegulatorDisconnect	Pressure regulator is disconnected	Open emergency brake valves; halt pod; deactivate HV system	
Brake_PneumaticSystemDisconnect	Brake pneumatic system is disconnected	Open emergency brake valves; halt pod; deactivate HV system	
BMI_LowVoltageFault	Pack voltage is too low	Halt and disconnect HV system	
BMI_HighVoltageFault	Pack voltage is too high	Halt and disconnect HV system	
BMI_VoltageImbalanceFault	Cell voltages in pack excessively deviate from each other	Halt and deactivate HV system	Blow pyro fuse
BMI_PyroBlownFault	The pyro has been blown	Fully engage brakes	

Fault	Cause	Primary Handling	Emergency Handling
BMI_OverCurrentFault	Too much current is passing through pod, perhaps due to short	If not overly excessive, reduce motor torque.	If overly excessive, blow the pyro fuse
BMI_ContactorWeldedFault	Contactors are welded and fail to open	Blow the pyro fuse	
BMI_IsolationFault	Leakage is occurring between the HV system and the chassis	Blow the pyro fuse	
BMI_TemperatureFault	A module in the battery pack exceeds the maximal temperature	Halt pod, deactivate HV system	Blow pyro fuse if high temperature persists
BMI_TemperatureImbalanceFault	The maximal module temperature drastically exceeds the module average	Halt pod, deactivate HV system	Blow pyro fuse if high temperature persists
Fiducial_PositionModelMismatchFault	Calculated position strongly deviates from model position	Attempt to recalibrate trajectory model	Halt pod, disconnect HV system
Fiducial_VelocityModelMismatchFault	Calculated acceleration strongly deviates from model position	Attempt to recalibrate trajectory model	Halt pod, disconnect HV system
Fiducial_AccelerationModelMismatchFault	Calculated acceleration strongly deviates from model position	Attempt to recalibrate trajectory model	Halt pod, disconnect HV system

Fault	Cause	Primary Handling	Emergency Handling
Fiducial_AccelerationSensorMismatchFault	Accelerometer data fails to match free wheel acceleration data	Halt pod, disconnect HV system	
Fiducial_RotaryEncoderDisconnect	Free wheel encoder is disconnected	Halt pod, disconnect HV system	
Fiducial_LaserDistanceSensorDisconnect	Laser distance sensor is disconnected	If in crawl, halt pod, disconnect HV system	
Fiducial_RetroReflectiveDisconnect	Retroreflective sensor is not providing data	Halt pod, disconnect HV system	
Fiducial_ImuDisconnect	IMU is disconnected	Halt pod, disconnect HV system	
Fiducial_ShakeFault	Excessive oscillation is seen by accelerometer	Reduce acceleration and velocity	Halt pod, disconnect HV system
Fiducial_EndDistanceLowFault	The remaining distance calculated is too low	Halt pod, disconnect HV system	
Fiducial_CrawlDistanceLowFault	The remaining crawl distance calculated is too low	Halt pod, disconnect HV system	
MC_ExternalCommsFault	Failure to communicate with the base station	Halt pod, disconnect HV system	Blow pyro fuse and open braking valves

11. Vacuum Combability Analysis

Pod Speed & Operation

Before evaluating the pod's vacuum compatibility, the tube pressure needed to be selected for the pod's run. To select the pressure, a plot of tube pressure vs. maximum pod velocity was generated, shown in Table XXV. The data from the table indicates that the increase in potential maximum velocity when operating with a tube pressure of 0.1 atm rather than a pressure of 1 atm is only about 4 m/s.

Safety & Scalability

Since there is only such a small change of max speed over the pressure range, a tube pressure of 1 atm has been selected for the pod's competition run because safe operation of pod systems in a low-pressure environment likely cannot be sufficiently validated due to time constraints and limited vacuum testing resources, and the decrease in top speed due to this decision was not deemed significant. For pod scalability reasons, however, potential safeguards against the dangers of low-pressure operation are still included in the design. The batteries, for example, will still be placed in a pressure vessel as they would be for a pod designed to operate in near-vacuum pressures, but this pressure vessel need not be pressurized for the pod's run at competition because it is safe to operate the batteries at the tube pressure of 1 atm.

Table XXV. Table of velocity at various tube pressures.

Pressure (atm)	Velocity (m/s)
0.1	122.21
0.5	120.34
1	119.30