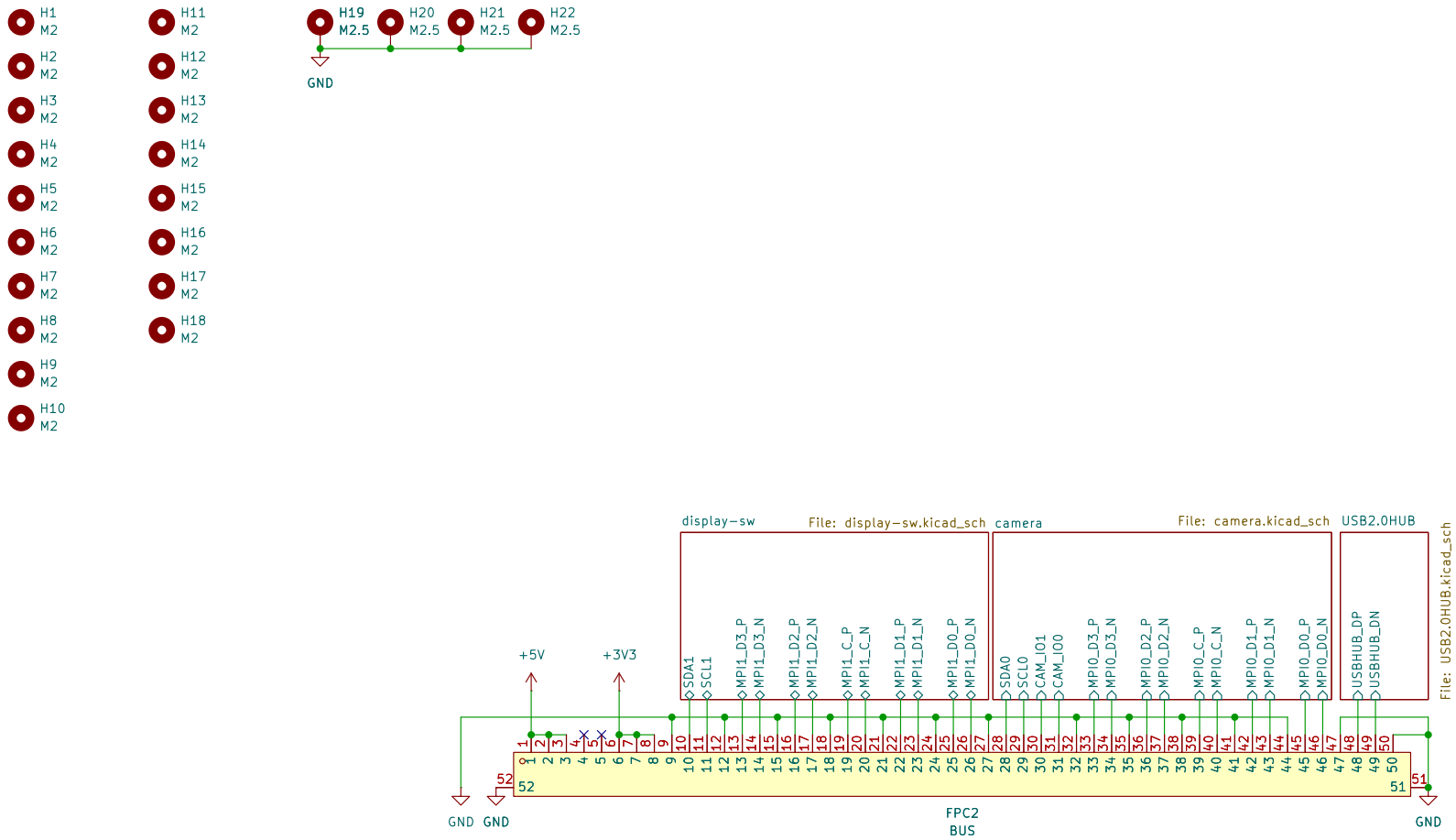

HyperPROBE Labs.

Kali Assistant

Sheet: /

File: SCREEN-PANEL.kicad_sch

Title: CyberDeck Screen Panel PCB

Size: A4	Date: 2026-04-29	**Rev: 0.1PT**
KiCad E.D.A. 10.0.1		Id: 1/4

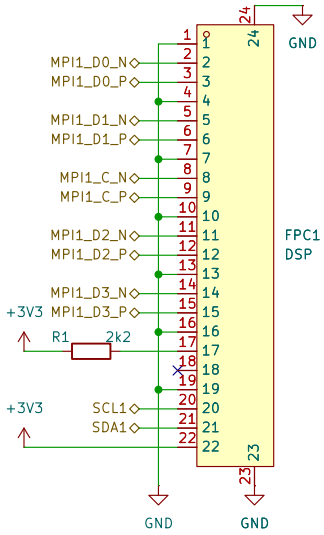

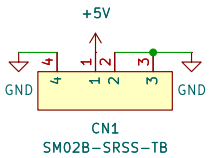

DSI

POWER

HyperPROBE Labs.

Kali Assistant

Sheet: /display-sw/
File: display-sw.kicad_sch

Title: CyberDeck Screen Panel PCB

Size: A4	Date: 2026-04-29	**Rev: 0.1PT**
KiCad E.D.A. 10.0.1		Id: 2/4

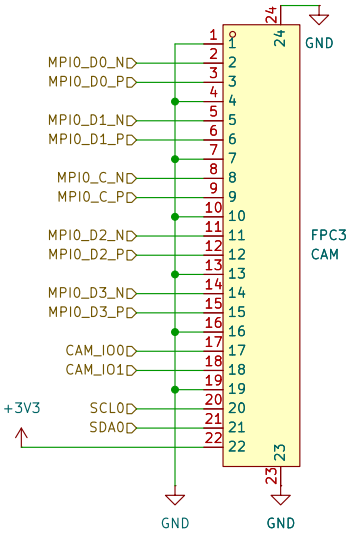

HyperPROBE Labs.

Kali Assistant

Sheet: /camera/
File: camera.kicad_sch

Title: CyberDeck Screen Panel PCB

Size: A4	Date: 2026-04-29	**Rev: 0.1PT**
KiCad E.D.A. 10.0.1		Id: 3/4

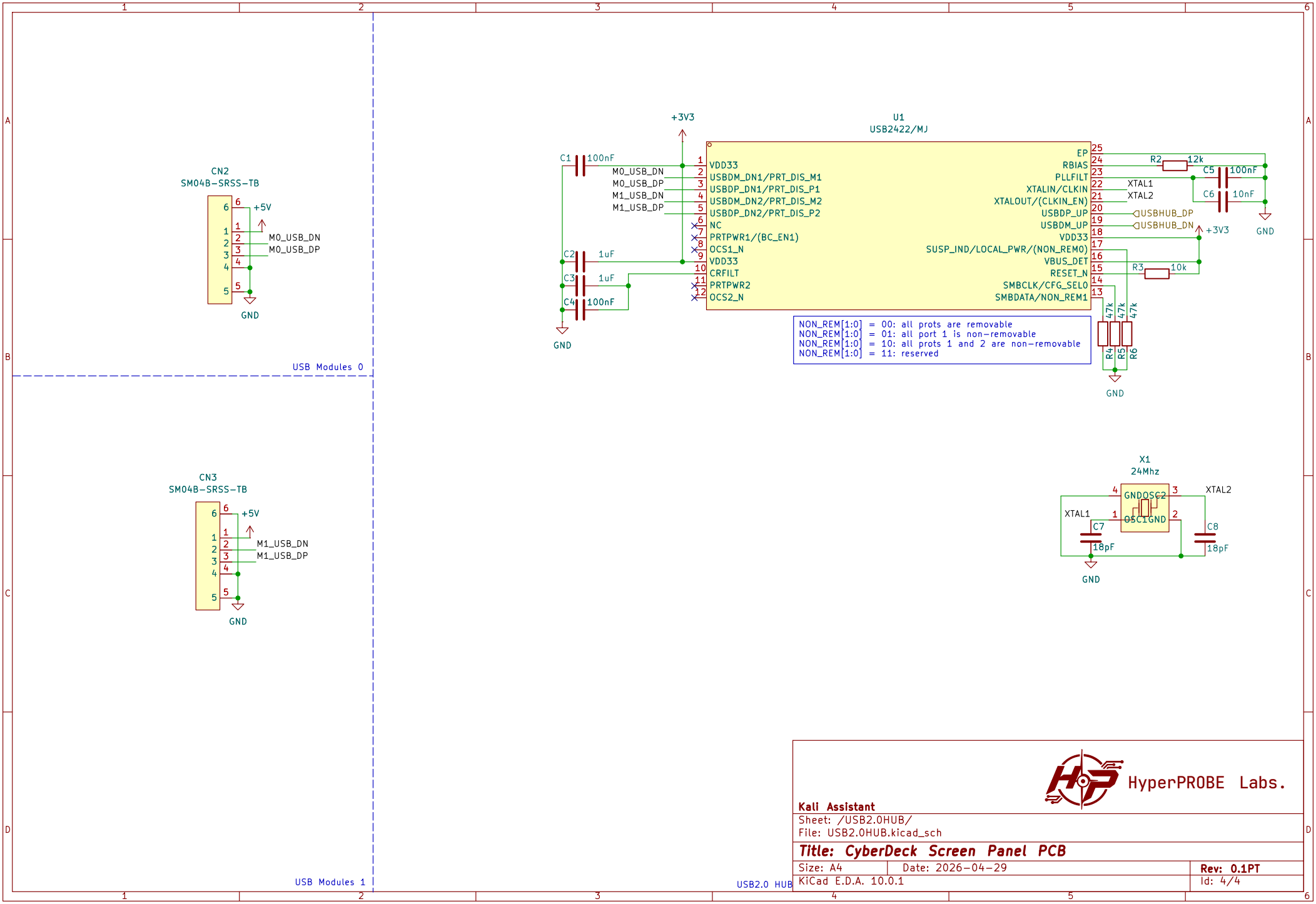
CN2
SM04B-SRSS-TB
+5V
M0_USB_DN
M0_USB_DP
GND
USB Modules 0
CN3
SM04B-SRSS-TB
+5V
M1_USB_DN
M1_USB_DP
GND
USB Modules 1
+3V3
U1
USB2422/MJ
C1 100nF
C2 1uF
C3 1uF
C4 100nF
M0_USB_DN
M0_USB_DP
M1_USB_DN
M1_USB_DP
VDD33
USBDM_DN1/PRT_DIS_M1
USBDP_DN1/PRT_DIS_P1
USBDM_DN2/PRT_DIS_M2
USBDP_DN2/PRT_DIS_P2
NC
PRTPWR1/(BC_EN1)
OCS1_N
VDD33
CRFILT
PRTPWR2
OCS2_N
EP
RBIAS
PLLFILT
XTALIN/CLKIN
XTALOUT/(CLKIN_EN)
USBDP_UP
USBDM_UP
VDD33
SUSP_IND/LOCAL_PWR/(NON_REM0)
VBUS_DET
RESET_N
SMBCLK/CFG_SEL0
SMBDATA/NON_REM1
R2 12k
C5 100nF
C6 10nF
XTAL1
XTAL2
USBHUB_DP
USBHUB_DN
+3V3
GND
R3 10k
R4 47k
R5 47k
R6 47k
NON_REM[1:0] = 00: all prots are removable
NON_REM[1:0] = 01: all port 1 is non-removable
NON_REM[1:0] = 10: all prots 1 and 2 are non-removable
NON_REM[1:0] = 11: reserved
X1
24Mhz
GND
OSC2
OSC1
XTAL1
XTAL2
C7 18pF
C8 18pF
USB2.0 HUB
HyperPROBE Labs.
Kali Assistant
Sheet: /USB2.0HUB/
File: USB2.0HUB.kicad_sch
Title: CyberDeck Screen Panel PCB
Size: A4
Date: 2026-04-29
Rev: 0.1PT
KiCad E.D.A. 10.0.1
Id: 4/4