BERT4Rec: Sequential Recommendation with Bidirectional Encoder Representations from Transformer

Fei Sun, Jun Liu, Jian Wu, Changhua Pei, Xiao Lin, Wenwu Ou, and Peng Jiang
Alibaba Group, Beijing, China
{ofey.sf,yanhan.lj,joshuawu.wujian,changhua.pch,hc.lx,santong.oww,jiangpeng.jp}@alibaba-inc.com

arXiv:1904.06690v2 [cs.IR] 21 Aug 2019

ABSTRACT

Modeling users' dynamic preferences from their historical behaviors is challenging and crucial for recommendation systems. Previous methods employ sequential neural networks to encode users' historical interactions from left to right into hidden representations for making recommendations. Despite their effectiveness, we argue that such left-to-right unidirectional models are sub-optimal due to the limitations including: ***a)*** unidirectional architectures restrict the power of hidden representation in users' behavior sequences; ***b)*** they often assume a rigidly ordered sequence which is not always practical. To address these limitations, we proposed a sequential recommendation model called **BERT4Rec**, which employs the deep bidirectional self-attention to model user behavior sequences. To avoid the information leakage and efficiently train the bidirectional model, we adopt the Cloze objective to sequential recommendation, predicting the random masked items in the sequence by jointly conditioning on their left and right context. In this way, we learn a bidirectional representation model to make recommendations by allowing each item in user historical behaviors to fuse information from both left and right sides. Extensive experiments on four benchmark datasets show that our model outperforms various state-of-the-art sequential models consistently.

CCS CONCEPTS

• **Information systems → Recommender systems**.

KEYWORDS

Sequential Recommendation; Bidirectional Sequential Model; Cloze

ACM Reference Format:
Fei Sun, Jun Liu, Jian Wu, Changhua Pei, Xiao Lin, Wenwu Ou, and Peng Jiang. 2019. BERT4Rec: Sequential Recommendation with Bidirectional Encoder Representations from Transformer. In *The 28th ACM International Conference on Information and Knowledge Management (CIKM '19), November 3–7, 2019, Beijing, China.* ACM, New York, NY, USA, 11 pages. https://doi.org/10.1145/3357384.3357895

1 INTRODUCTION

Accurately characterizing users' interests lives at the heart of an effective recommendation system. In many real-world applications, users' current interests are intrinsically dynamic and evolving, influenced by their historical behaviors. For example, one may purchase accessories (*e.g.*, Joy-Con controllers) soon after buying a Nintendo Switch, though she/he will not buy console accessories under normal circumstances.

To model such sequential dynamics in user behaviors, various methods have been proposed to make *sequential recommendations* based on users' historical interactions [15, 22, 40]. They aim to predict the successive item(s) that a user is likely to interact with given her/his past interactions. Recently, a surge of works employ sequential neural networks, *e.g.*, Recurrent Neural Network (RNN), for sequential recommendation and obtain promising results [7, 14, 15, 56, 58]. The basic paradigm of previous work is to encode a user's historical interactions into a vector (*i.e.*, representation of user's preference) using a left-to-right sequential model and make recommendations based on this hidden representation.

Despite their prevalence and effectiveness, we argue that such left-to-right unidirectional models are not sufficient to learn optimal representations for user behavior sequences. The major limitation, as illustrated in Figure 1c and 1d, is that such unidirectional models restrict the power of hidden representation for items in the historical sequences, where each item can only encode the information from previous items. Another limitation is that previous unidirectional models are originally introduced for sequential data with natural order, *e.g.*, text and time series data. They often assume a rigidly ordered sequence over data which is not always true for user behaviors in real-world applications. In fact, the choices of items in a user's historical interactions may not follow a rigid order assumption [18, 54] due to various unobservable external factors [5]. In such a situation, it is crucial to incorporate context from both directions in user behavior sequence modeling.

To address the limitations mentioned above, we seek to use a bidirectional model to learn the representations for users' historical behavior sequences. Specifically, inspired by the success of BERT [6] in text understanding, we propose to apply the deep bidirectional self-attention model to sequential recommendation, as illustrated in Figure 1b. For representation power, the superior results for deep bidirectional models on text sequence modeling tasks show that it is beneficial to incorporate context from both sides for sequence representations learning [6]. For rigid order assumption, our model is more suitable than unidirectional models in modeling user behavior sequences since all items in the bidirectional model can leverage the contexts from both left and right side.

However, it is not straightforward and intuitive to train the bidirectional model for sequential recommendation. Conventional sequential recommendation models are usually trained left-to-right by predicting the next item for each position in the input sequence. As shown in Figure 1, jointly conditioning on both left and right

Permission to make digital or hard copies of all or part of this work for personal or classroom use is granted without fee provided that copies are not made or distributed for profit or commercial advantage and that copies bear this notice and the full citation on the first page. Copyrights for components of this work owned by others than the author(s) must be honored. Abstracting with credit is permitted. To copy otherwise, or republish, to post on servers or to redistribute to lists, requires prior specific permission and/or a fee. Request permissions from permissions@acm.org.
CIKM '19, November 3–7, 2019, Beijing, China
© 2019 Copyright held by the owner/author(s). Publication rights licensed to ACM.
ACM ISBN 978-1-4503-6976-3/19/11…$15.00
https://doi.org/10.1145/3357384.3357895

context in a deep bidirectional model would cause information leakage, *i.e.*, allowing each item to indirectly "see the target item". This could make predicting the future become trivial and the network would not learn anything useful.

To tackle this problem, we introduce the Cloze task [6, 50] to take the place of the objective in unidirectional models (*i.e.*, sequentially predicting the next item). Specifically, we randomly mask some items (*i.e.*, replace them with a special token `[mask]`) in the input sequences, and then predict the ids of those masked items based on their surrounding context. In this way, we avoid the information leakage and learn a bidirectional representation model by allowing the representation of each item in the input sequence to fuse both the left and right context. In addition to training a bidirectional model, another advantage of the Cloze objective is that it can produce more samples to train a more powerful model in multiple epochs. However, a downside of the Cloze task is that it is not consistent with the final task (*i.e.*, sequential recommendation). To fix this, during the test, we append the special token "`[mask]`" at the end of the input sequence to indicate the item that we need to predict, and then make recommendations base on its final hidden vector. Extensive experiments on four datasets show that our model outperforms various state-of-the-art baselines consistently.

The contributions of our paper are as follows:

- We propose to model user behavior sequences with a bidirectional self-attention network through Cloze task. To the best of our knowledge, this is the first study to introduce deep bidirectional sequential model and Cloze objective into the field of recommendation systems.
- We compare our model with state-of-the-art methods and demonstrate the effectiveness of both bidirectional architecture and the Cloze objective through quantitative analysis on four benchmark datasets.
- We conduct a comprehensive ablation study to analyze the contributions of key components in the proposed model.

2 RELATED WORK

In this section, we will briefly review several lines of works closely related to ours, including general recommendation, sequential recommendation, and attention mechanism.

2.1 General Recommendation

Early works on recommendation systems typically use Collaborative Filtering (CF) to model users' preferences based on their interaction histories [26, 43]. Among various CF methods, Matrix Factorization (MF) is the most popular one, which projects users and items into a shared vector space and estimate a user's preference on an item by the inner product between their vectors [26, 27, 41]. Another line of work is item-based neighborhood methods [20, 25, 31, 43]. They estimate a user's preference on an item via measuring its similarities with the items in her/his interaction history using a precomputed item-to-item similarity matrix.

Recently, deep learning has been revolutionizing the recommendation systems dramatically. The early pioneer work is a two-layer Restricted Boltzmann Machines (RBM) for collaborative filtering, proposed by Salakhutdinov et al. [42] in Netflix Prize[1].

[1]https://www.netflixprize.com

One line of deep learning based methods seeks to improve the recommendation performance by integrating the distributed item representations learned from auxiliary information, *e.g.*, text [23, 53], images [21, 55], and acoustic features [51] into CF models. Another line of work seeks to take the place of conventional matrix factorization. For example, Neural Collaborative Filtering (NCF) [12] estimates user preferences via Multi-Layer Perceptions (MLP) instead of inner product, while AutoRec [44] and CDAE [57] predict users' ratings using Auto-encoder framework.

2.2 Sequential Recommendation

Unfortunately, none of the above methods is for sequential recommendation since they all ignore the order in users' behaviors.

Early works on sequential recommendation usually capture sequential patterns from user historical interactions using Markov chains (MCs). For example, Shani et al. [45] formalized recommendation generation as a sequential optimization problem and employ Markov Decision Processes (MDPs) to address it. Later, Rendle et al. [40] combine the power of MCs and MF to model both sequential behaviors and general interests by Factorizing Personalized Markov Chains (FPMC). Besides the first-order MCs, high-order MCs are also adopted to consider more previous items [10, 11].

Recently, RNN and its variants, Gated Recurrent Unit (GRU) [4] and Long Short-Term Memory (LSTM) [17], are becoming more and more popular for modeling user behavior sequences [7, 14, 15, 28, 37, 56, 58]. The basic idea of these methods is to encode user's previous records into a vector (*i.e.*, representation of user's preference which is used to make predictions) with various recurrent architectures and loss functions, including session-based GRU with ranking loss (GRU4Rec) [15], Dynamic REcurrent bAsket Model (DREAM) [58], user-based GRU [7], attention-based GRU (NARM) [28], and improved GRU4Rec with new loss function (*i.e.*, `BPR-max` and `TOP1-max`) and an improved sampling strategy [14].

Other than recurrent neural networks, various deep learning models are also introduced for sequential recommendation [3, 22, 33, 49]. For example, Tang and Wang [49] propose a Convolutional Sequence Model (Caser) to learn sequential patterns using both horizontal and vertical convolutional filters. Chen et al. [3] and Huang et al. [19] employ Memory Network to improve sequential recommendation. STAMP captures both users' general interests and current interests using an MLP network with attention [33].

2.3 Attention Mechanism

Attention mechanism has shown promising potential in modeling sequential data, *e.g.*, machine translation [2, 52] and text classification [?]. Recently, some works try to employ the attention mechanism to improve recommendation performances and interpretability [28, 33]. For example, Li et al. [28] incorporate an attention mechanism into GRU to capture both the user's sequential behavior and main purpose in session-based recommendation.

The works mentioned above basically treat attention mechanism as an additional component to the original models. In contrast, Transformer [52] and BERT [6] are built solely on multi-head self-attention and achieve state-of-the-art results on text sequence modeling. Recently, there is a rising enthusiasm for applying purely attention-based neural networks to model sequential data for their

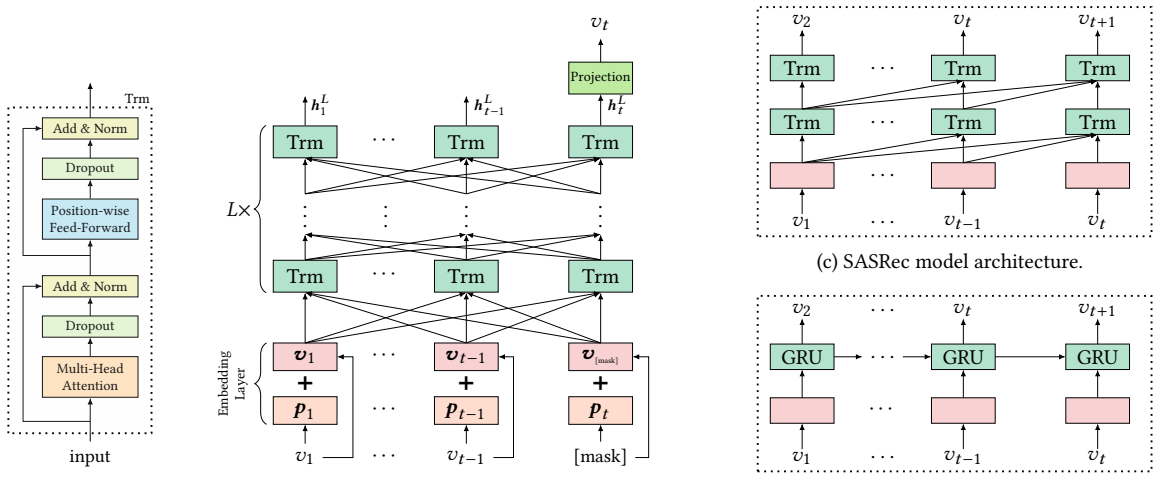

(a) Transformer Layer. (b) BERT4Rec model architecture. (c) SASRec model architecture. (d) RNN based sequential recommendation methods.

Figure 1: Differences in sequential recommendation model architectures. BERT4Rec learns a bidirectional model via Cloze task, while SASRec and RNN based methods are all left-to-right unidirectional model which predict next item sequentially.

effectiveness and efficiency [30, 32, 38, 46?]. For sequential recommendation, Kang and McAuley [22] introduce a two-layer *Transformer decoder* (*i.e.*, Transformer language model) called SASRec to capture user's sequential behaviors and achieve state-of-the-art results on several public datasets. SASRec is closely related to our work. However, it is still a unidirectional model using a casual attention mask. While we use a bidirectional model to encode users' behavior sequences with the help of Cloze task.

3 BERT4REC

Before going into the details, we first introduce the research problem, the basic concepts, and the notations in this paper.

3.1 Problem Statement

In sequential recommendation, let $\mathcal{U}=\{u_1, u_2, \ldots, u_{|\mathcal{U}|}\}$ denote a set of users, $\mathcal{V}=\{v_1, v_2, \ldots, v_{|\mathcal{V}|}\}$ be a set of items, and list $\mathcal{S}_u=[v_1^{(u)}, \ldots, v_t^{(u)}, \ldots, v_{n_u}^{(u)}]$ denote the interaction sequence in chronological order for user $u \in \mathcal{U}$, where $v_t^{(u)} \in \mathcal{V}$ is the item that u has interacted with at time step[2] t and n_u is the the length of interaction sequence for user u. Given the interaction history $\mathcal{S}_u$, sequential recommendation aims to predict the item that user u will interact with at time step $n_u + 1$. It can be formalized as modeling the probability over all possible items for user u at time step n_u+1:

$$p(v_{n_u+1}^{(u)} = v \mid \mathcal{S}_u)$$

3.2 Model Architecture

Here, we introduce a new sequential recommendation model called **BERT4Rec**, which adopts **B**idirectional **E**ncoder **R**epresentations from **T**ransformers to a new task, sequential **R**ecommendation. It is built upon the popular self-attention layer, "Transformer layer".

As illustrated in Figure 1b, BERT4Rec is stacked by L bidirectional Transformer layers. At each layer, it iteratively revises the representation of every position by exchanging information across all positions at the previous layer in parallel with the Transformer layer. Instead of learning to pass relevant information forward step by step as RNN based methods did in Figure 1d, self-attention mechanism endows BERT4Rec with the capability to directly capture the dependencies in any distances. This mechanism results in a global receptive field, while CNN based methods like Caser usually have a limited receptive field. In addition, in contrast to RNN based methods, self-attention is straightforward to parallelize.

Comparing Figure 1b, 1c, and 1d, the most noticeable difference is that SASRec and RNN based methods are all left-to-right unidirectional architecture, while our BERT4Rec uses bidirectional self-attention to model users' behavior sequences. In this way, our proposed model can obtain more powerful representations of users' behavior sequences to improve recommendation performances.

3.3 Transformer Layer

As illustrated in Figure 1b, given an input sequence of length t, we iteratively compute hidden representations $\boldsymbol{h}_i^l$ at each layer l for each position i simultaneously by applying the Transformer layer from [52]. Here, we stack $\boldsymbol{h}_i^l \in \mathbb{R}^d$ together into matrix $\boldsymbol{H}^l \in \mathbb{R}^{t \times d}$ since we compute attention function on all positions simultaneously in practice. As shown in Figure 1a, the Transformer layer `Trm` contains two sub-layers, a *Multi-Head Self-Attention* sub-layer and a *Position-wise Feed-Forward Network*.

Multi-Head Self-Attention. Attention mechanisms have become an integral part of sequence modeling in a variety of tasks, allowing capturing the dependencies between representation pairs without regard to their distance in the sequences. Previous work has shown that it is beneficial to jointly attend to information from different representation subspaces at different positions [6, 29, 52]. Thus, we here adopt the multi-head self-attention instead of performing a single attention function. Specifically, multi-head attention first linearly projects $\boldsymbol{H}^l$ into h subspaces, with different, learnable linear projections, and then apply h attention functions

[2]Here, following [22, 40], we use the relative time index instead of absolute time index for numbering interaction records.