tion $z = \mathcal{E}(x)$, and the decoder $\mathcal{D}$ reconstructs the image from the latent, giving $\tilde{x} = \mathcal{D}(z) = \mathcal{D}(\mathcal{E}(x))$, where $z \in \mathbb{R}^{h \times w \times c}$. Importantly, the encoder *downsamples* the image by a factor $f = H/h = W/w$, and we investigate different downsampling factors $f = 2^m$, with $m \in \mathbb{N}$.

In order to avoid arbitrarily high-variance latent spaces, we experiment with two different kinds of regularizations. The first variant, *KL-reg.*, imposes a slight KL-penalty towards a standard normal on the learned latent, similar to a VAE [46, 69], whereas *VQ-reg.* uses a vector quantization layer [96] within the decoder. This model can be interpreted as a VQGAN [23] but with the quantization layer absorbed by the decoder. Because our subsequent DM is designed to work with the two-dimensional structure of our learned latent space $z = \mathcal{E}(x)$, we can use relatively mild compression rates and achieve very good reconstructions. This is in contrast to previous works [23, 66], which relied on an arbitrary 1D ordering of the learned space $z$ to model its distribution autoregressively and thereby ignored much of the inherent structure of $z$. Hence, our compression model preserves details of $x$ better (see Tab. 8). The full objective and training details can be found in the supplement.

### 3.2. Latent Diffusion Models

**Diffusion Models** [82] are probabilistic models designed to learn a data distribution $p(x)$ by gradually denoising a normally distributed variable, which corresponds to learning the reverse process of a fixed Markov Chain of length $T$. For image synthesis, the most successful models [15,30,72] rely on a reweighted variant of the variational lower bound on $p(x)$, which mirrors denoising score-matching [85]. These models can be interpreted as an equally weighted sequence of denoising autoencoders $\epsilon_\theta(x_t, t)$; $t = 1 \dots T$, which are trained to predict a denoised variant of their input $x_t$, where $x_t$ is a noisy version of the input $x$. The corresponding objective can be simplified to (Sec. B)

$$L_{DM} = \mathbb{E}_{x,\epsilon\sim\mathcal{N}(0,1),t}\left[\|\epsilon - \epsilon_\theta(x_t, t)\|_2^2\right], \qquad (1)$$

with $t$ uniformly sampled from $\{1, \dots, T\}$.

**Generative Modeling of Latent Representations** With our trained perceptual compression models consisting of $\mathcal{E}$ and $\mathcal{D}$, we now have access to an efficient, low-dimensional latent space in which high-frequency, imperceptible details are abstracted away. Compared to the high-dimensional pixel space, this space is more suitable for likelihood-based generative models, as they can now (i) focus on the important, semantic bits of the data and (ii) train in a lower dimensional, computationally much more efficient space.

Unlike previous work that relied on autoregressive, attention-based transformer models in a highly compressed, discrete latent space [23, 66, 103], we can take advantage of image-specific inductive biases that our model offers. This includes the ability to build the underlying UNet primarily from 2D convolutional layers, and further focusing the objective on the perceptually most relevant bits using the reweighted bound, which now reads

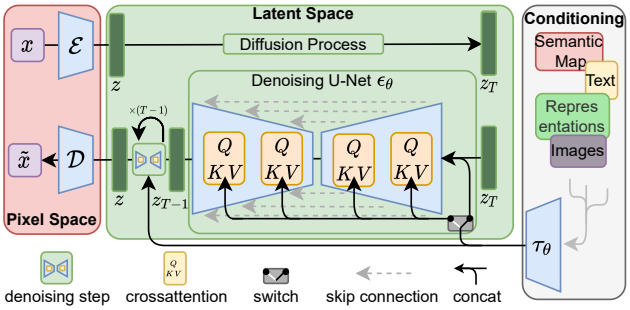


Figure 3. We condition LDMs either via concatenation or by a more general cross-attention mechanism. See Sec. 3.3

$$L_{LDM} := \mathbb{E}_{\mathcal{E}(x),\epsilon\sim\mathcal{N}(0,1),t}\left[\|\epsilon - \epsilon_\theta(z_t, t)\|_2^2\right]. \qquad (2)$$

The neural backbone $\epsilon_\theta(\circ, t)$ of our model is realized as a time-conditional UNet [71]. Since the forward process is fixed, $z_t$ can be efficiently obtained from $\mathcal{E}$ during training, and samples from $p(z)$ can be decoded to image space with a single pass through $\mathcal{D}$.

### 3.3. Conditioning Mechanisms

Similar to other types of generative models [56, 83], diffusion models are in principle capable of modeling conditional distributions of the form $p(z|y)$. This can be implemented with a conditional denoising autoencoder $\epsilon_\theta(z_t, t, y)$ and paves the way to controlling the synthesis process through inputs $y$ such as text [68], semantic maps [33, 61] or other image-to-image translation tasks [34].

In the context of image synthesis, however, combining the generative power of DMs with other types of conditionings beyond class-labels [15] or blurred variants of the input image [72] is so far an under-explored area of research.

We turn DMs into more flexible conditional image generators by augmenting their underlying UNet backbone with the cross-attention mechanism [97], which is effective for learning attention-based models of various input modalities [35,36]. To pre-process $y$ from various modalities (such as language prompts) we introduce a domain specific encoder $\tau_\theta$ that projects $y$ to an intermediate representation $\tau_\theta(y) \in \mathbb{R}^{M \times d_\tau}$, which is then mapped to the intermediate layers of the UNet via a cross-attention layer implementing $\text{Attention}(Q, K, V) = \text{softmax}\left(\frac{QK^T}{\sqrt{d}}\right) \cdot V$, with

$$Q = W_Q^{(i)} \cdot \varphi_i(z_t),\ K = W_K^{(i)} \cdot \tau_\theta(y),\ V = W_V^{(i)} \cdot \tau_\theta(y).$$

Here, $\varphi_i(z_t) \in \mathbb{R}^{N \times d_\epsilon^i}$ denotes a (flattened) intermediate representation of the UNet implementing $\epsilon_\theta$ and $W_V^{(i)} \in$

Figure 4. Samples from *LDMs* trained on CelebAHQ [39], FFHQ [41], LSUN-Churches [102], LSUN-Bedrooms [102] and class-conditional ImageNet [12], each with a resolution of $256 \times 256$. Best viewed when zoomed in. For more samples *cf*. the supplement.

$\mathbb{R}^{d \times d^i_\epsilon}$, $W_Q^{(i)} \in \mathbb{R}^{d \times d_\tau}$ & $W_K^{(i)} \in \mathbb{R}^{d \times d_\tau}$ are learnable projection matrices [36, 97]. See Fig. 3 for a visual depiction.

Based on image-conditioning pairs, we then learn the conditional LDM via

$$L_{LDM} := \mathbb{E}_{\mathcal{E}(x),y,\epsilon\sim\mathcal{N}(0,1),t}\Big[\|\epsilon - \epsilon_\theta(z_t, t, \tau_\theta(y))\|_2^2\Big], \quad (3)$$

where both $\tau_\theta$ and $\epsilon_\theta$ are jointly optimized via Eq. 3. This conditioning mechanism is flexible as $\tau_\theta$ can be parameterized with domain-specific experts, *e.g.* (unmasked) transformers [97] when $y$ are text prompts (see Sec. 4.3.1)

# 4. Experiments

*LDMs* provide means to flexible and computationally tractable diffusion based image synthesis of various image modalities, which we empirically show in the following. Firstly, however, we analyze the gains of our models compared to pixel-based diffusion models in both training and inference. Interestingly, we find that *LDMs* trained in *VQ*-regularized latent spaces sometimes achieve better sample quality, even though the reconstruction capabilities of *VQ*-regularized first stage models slightly fall behind those of their continuous counterparts, *cf*. Tab. 8. A visual comparison between the effects of first stage regularization schemes on *LDM* training and their generalization abilities to resolutions $> 256^2$ can be found in Appendix D.1. In E.2 we list details on architecture, implementation, training and evaluation for all results presented in this section.

## 4.1. On Perceptual Compression Tradeoffs

This section analyzes the behavior of our LDMs with different downsampling factors $f \in \{1, 2, 4, 8, 16, 32\}$ (abbreviated as *LDM-f*, where *LDM-1* corresponds to pixel-based DMs). To obtain a comparable test-field, we fix the computational resources to a single NVIDIA A100 for all experiments in this section and train all models for the same number of steps and with the same number of parameters.

Tab. 8 shows hyperparameters and reconstruction performance of the first stage models used for the *LDMs* compared in this section. Fig. 6 shows sample quality as a function of training progress for 2M steps of class-conditional models on the ImageNet [12] dataset. We see that, i) small downsampling factors for *LDM-{1,2}* result in slow training progress, whereas ii) overly large values of $f$ cause stagnating fidelity after comparably few training steps. Revisiting the analysis above (Fig. 1 and 2) we attribute this to i) leaving most of perceptual compression to the diffusion model and ii) too strong first stage compression resulting in information loss and thus limiting the achievable quality. *LDM-{4-16}* strike a good balance between efficiency and perceptually faithful results, which manifests in a significant FID [29] gap of 38 between pixel-based diffusion (*LDM-1*) and *LDM-8* after 2M training steps.

In Fig. 7, we compare models trained on CelebA-HQ [39] and ImageNet in terms sampling speed for different numbers of denoising steps with the DDIM sampler [84] and plot it against FID-scores [29]. *LDM-{4-8}* outperform models with unsuitable ratios of perceptual and conceptual compression. Especially compared to pixel-based *LDM-1*, they achieve much lower FID scores while simultaneously significantly increasing sample throughput. Complex datasets such as ImageNet require reduced compression rates to avoid reducing quality. In summary, *LDM-4* and *-8* offer the best conditions for achieving high-quality synthesis results.

## 4.2. Image Generation with Latent Diffusion

We train unconditional models of $256^2$ images on CelebA-HQ [39], FFHQ [41], LSUN-Churches and -Bedrooms [102] and evaluate the i) sample quality and ii) their coverage of the data manifold using ii) FID [29] and ii) Precision-and-Recall [50]. Tab. 1 summarizes our results. On CelebA-HQ, we report a new state-of-the-art FID of 5.11, outperforming previous likelihood-based models as well as GANs. We also outperform LSGM [93] where a latent diffusion model is trained jointly together with the first stage. In contrast, we train diffusion models in a fixed space

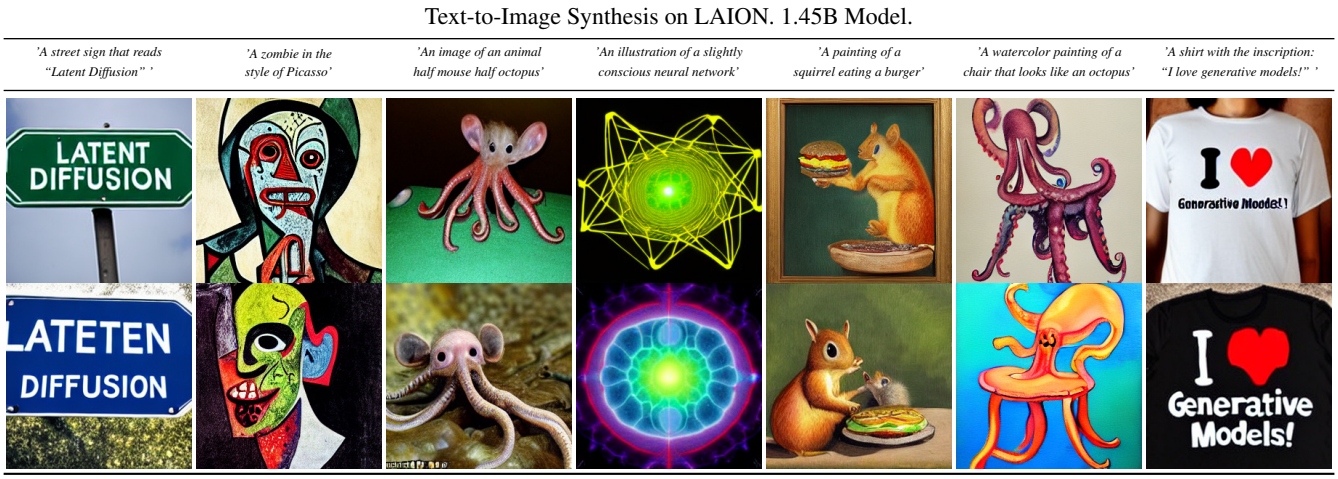


Figure 5. Samples for user-defined text prompts from our model for text-to-image synthesis, *LDM-8 (KL)*, which was trained on the LAION [78] database. Samples generated with 200 DDIM steps and $\eta = 1.0$. We use unconditional guidance [32] with $s = 10.0$.

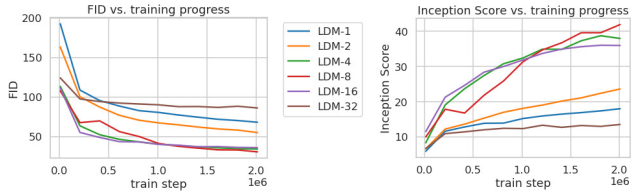


Figure 6. Analyzing the training of class-conditional *LDMs* with different downsampling factors $f$ over 2M train steps on the ImageNet dataset. Pixel-based *LDM-1* requires substantially larger train times compared to models with larger downsampling factors (*LDM-*$\{$*4-16*$\}$). Too much perceptual compression as in *LDM-32* limits the overall sample quality. All models are trained on a single NVIDIA A100 with the same computational budget. Results obtained with 100 DDIM steps [84] and $\kappa = 0$.

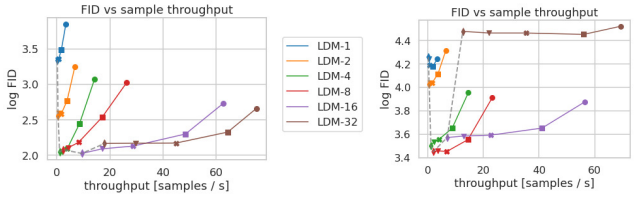


Figure 7. Comparing *LDMs* with varying compression on the CelebA-HQ (left) and ImageNet (right) datasets. Different markers indicate $\{10, 20, 50, 100, 200\}$ sampling steps using DDIM, from right to left along each line. The dashed line shows the FID scores for 200 steps, indicating the strong performance of *LDM-*$\{$*4-8*$\}$. FID scores assessed on 5000 samples. All models were trained for 500k (CelebA) / 2M (ImageNet) steps on an A100.

and avoid the difficulty of weighing reconstruction quality against learning the prior over the latent space, see Fig. 1-2.

We outperform prior diffusion based approaches on all but the LSUN-Bedrooms dataset, where our score is close to ADM [15], despite utilizing half its parameters and requiring 4-times less train resources (see Appendix E.3.5).

| CelebA-HQ 256 × 256 | | | |
|---|---|---|---|
| **Method** | FID ↓ | Prec. ↑ | Recall ↑ |
| DC-VAE [63] | 15.8 | - | - |
| VQGAN+T. [23] (k=400) | 10.2 | - | - |
| PGGAN [39] | 8.0 | - | - |
| LSGM [93] | 7.22 | - | - |
| UDM [43] | 7.16 | - | - |
| *LDM-4* (ours, 500-s†) | **5.11** | 0.72 | 0.49 |

| FFHQ 256 × 256 | | | |
|---|---|---|---|
| **Method** | FID ↓ | Prec. ↑ | Recall ↑ |
| ImageBART [21] | 9.57 | - | - |
| U-Net GAN (+aug) [77] | 10.9 (7.6) | - | - |
| UDM [43] | 5.54 | - | - |
| StyleGAN [41] | 4.16 | 0.71 | 0.46 |
| ProjectedGAN [76] | **3.08** | 0.65 | 0.46 |
| *LDM-4* (ours, 200-s) | 4.98 | **0.73** | **0.50** |

| LSUN-Churches 256 × 256 | | | |
|---|---|---|---|
| **Method** | FID ↓ | Prec. ↑ | Recall ↑ |
| DDPM [30] | 7.89 | - | - |
| ImageBART [21] | 7.32 | - | - |
| PGGAN [39] | 6.42 | - | - |
| StyleGAN [41] | 4.21 | - | - |
| StyleGAN2 [42] | 3.86 | - | - |
| ProjectedGAN [76] | **1.59** | 0.61 | 0.44 |
| *LDM-8** (ours, 200-s) | 4.02 | **0.64** | **0.52** |

| LSUN-Bedrooms 256 × 256 | | | |
|---|---|---|---|
| **Method** | FID ↓ | Prec. ↑ | Recall ↑ |
| ImageBART [21] | 5.51 | - | - |
| DDPM [30] | 4.9 | - | - |
| UDM [43] | 4.57 | - | - |
| StyleGAN [41] | 2.35 | 0.59 | 0.48 |
| ADM [15] | 1.90 | **0.66** | **0.51** |
| ProjectedGAN [76] | **1.52** | 0.61 | 0.34 |
| *LDM-4* (ours, 200-s) | 2.95 | **0.66** | 0.48 |

Table 1. Evaluation metrics for unconditional image synthesis. CelebA-HQ results reproduced from [43, 63, 100], FFHQ from [42, 43]. †: $N$-s refers to $N$ sampling steps with the DDIM [84] sampler. *: trained in *KL*-regularized latent space. Additional results can be found in the supplementary.

| **Text-Conditional Image Synthesis** | | | | |
|---|---|---|---|---|
| **Method** | FID ↓ | IS↑ | $N$params | |
| CogView† [17] | 27.10 | 18.20 | 4B | self-ranking, rejection rate 0.017 |
| LAFITE† [109] | 26.94 | 26.02 | 75M | |
| GLIDE* [59] | 12.24 | - | 6B | 277 DDIM steps, c.f.g. [32] $s = 3$ |
| Make-A-Scene* [26] | **11.84** | - | 4B | c.f.g for AR models [98] $s = 5$ |
| *LDM-KL-8* | 23.31 | $20.03 \pm 0.33$ | 1.45B | 250 DDIM steps |
| *LDM-KL-8-G** | 12.63 | $\mathbf{30.29 \pm 0.42}$ | 1.45B | 250 DDIM steps, c.f.g. [32] $s = 1.5$ |

Table 2. Evaluation of text-conditional image synthesis on the 256 × 256-sized MS-COCO [51] dataset: with 250 DDIM [84] steps our model is on par with the most recent diffusion [59] and autoregressive [26] methods despite using significantly less parameters. †/*:Numbers from [109]/ [26]

Moreover, *LDMs* consistently improve upon GAN-based methods in Precision and Recall, thus confirming the advantages of their mode-covering likelihood-based training objective over adversarial approaches. In Fig. 4 we also show qualitative results on each dataset.