Feature Extraction and Steering for Enhanced Chain-of-Thought Reasoning in Language Models

Zihao Li[1*] **Xu Wang**[1*] **Yuzhe Yang**[2] **Ziyu Yao**[3] **Haoyi Xiong**[4] **Mengnan Du**[1]

[1]New Jersey Institute of Technology [2]University of California, Santa Barbara
[3]George Mason University [4]Microsoft

lizihao9885@gmail.com, mengnan.du@njit.edu

arXiv:2505.15634v4 [cs.CL] 12 Jul 2025

Abstract

Large Language Models (LLMs) demonstrate the ability to solve reasoning and mathematical problems using the Chain-of-Thought (CoT) technique. Expanding CoT length, as seen in models such as DeepSeek-R1, significantly enhances this reasoning for complex problems, but requires costly and high-quality long CoT data and fine-tuning. This work, inspired by the deep thinking paradigm of DeepSeek-R1, utilizes a steering technique to enhance the reasoning ability of an LLM without external datasets. Our method first employs Sparse Autoencoders (SAEs) to extract interpretable features from vanilla CoT. These features are then used to steer the LLM's internal states during generation. Recognizing that many LLMs do not have corresponding pre-trained SAEs, we further introduce a novel SAE-free steering algorithm, which directly computes steering directions from the residual activations of an LLM, obviating the need for an explicit SAE. Experimental results demonstrate that both our SAE-based and subsequent SAE-free steering algorithms significantly enhance the reasoning capabilities of LLMs.

1 Introduction

Large Language Models (LLMs), such as GPT-4 (Achiam et al., 2023) and Claude3, have achieved remarkable success in natural language processing due to their large parameter size. They tackle logical reasoning and mathematical problems by employing CoT prompting (Wei et al., 2023) to enable step-by-step reasoning. Recent models such as DeepSeek-R1 (Guo et al., 2025), OpenAI's o1 series (Jaech et al., 2024), Qwen2.5 (Yang et al., 2024), and Kimi1.5 (Team et al., 2025) amplify this by expanding CoT length, incorporating more reasoning steps, self-correction, and backtracking compared to vanilla CoT. This enhancement is typically achieved through distillation (e.g., DeepSeek-R1-distill-LlaMa3-8B (Guo et al., 2025)) or post-training (Zeng et al., 2025; Song et al., 2025). However, these methods for generating long CoT suffer from significant limitations. They need expensive, high-quality long CoT datasets which are difficult to obtain, and the process often overlooks the nuanced internal states of LLMs. Moreover, the verbosity of long CoT can introduce noisy features that do not contribute to, and may even detract from, the core reasoning process.

Concurrently, modulating LLM hidden states has proven effective for tasks such as knowledge editing (Meng et al., 2022) and improving truthfulness (Marks and Tegmark, 2023; Li et al., 2023). Prior to our work, studies by Tang et al. (2025), Sun et al. (2025), and Højer et al. (2025) have demonstrated that steering activations or editing weights can enhance the reasoning ability in smaller LLMs. For instance, Tang et al. (2025) relies on contrasting representations (from long vs. short CoT) to derive steering vectors. While promising, these existing steering approaches may still depend on the generation of contrastive data or may not fully exploit the fine-grained feature distinctions within a single, standard reasoning trace. Furthermore, they typically do not offer a systematic way to disentangle task-relevant reasoning signals from stylistic or superficial features present in the CoT.

This paper introduces a novel framework that addresses these limitations by enabling precise steering of LLM residual activations using features extracted exclusively from readily available vanilla CoT, thereby bypassing the need for expensive long CoT datasets, contrastive examples, or model retraining. Inspired by the "deep thinking" mode of reasoning models, e.g., DeepSeek-R1, which suggests that crucial reasoning components are latently present even in standard CoT, our techniques aim to identify and amplify these capabilities.

First, the core of our proposal is a Sparse Autoencoder (SAE)-based *steering mechanism that*

[*] The first two authors contributed equally to this work.

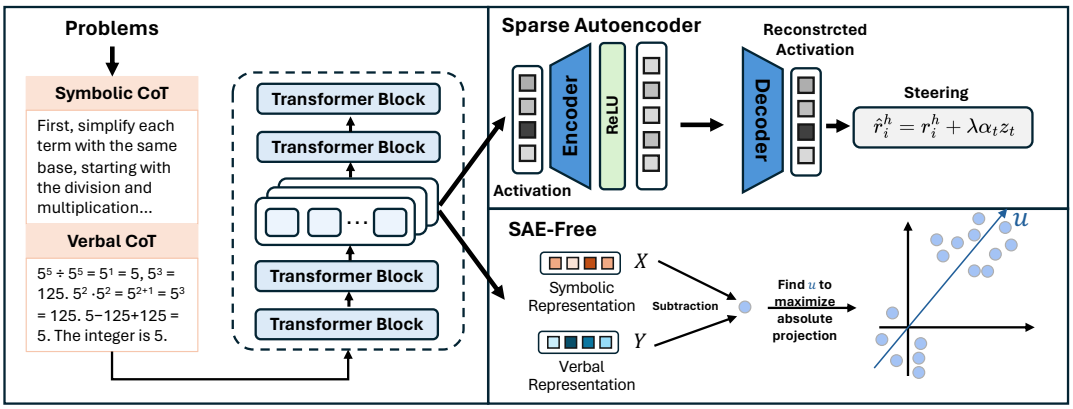

Figure 1: Main framework of SAE-based steering and SAE-free algorithm.

uniquely targets reasoning-specific features. We employ SAEs (Cunningham et al., 2023; Shu et al., 2025) to decompose the residual activations from vanilla CoT into interpretable features. To enhance feature selectivity and mitigate the influence of noise, we introduce a distinctive approach named **VS Decomposition**: the CoT is decomposed into a *Verbal process* (natural language articulation) and a *Symbolic process* (formal, rule-based logic), drawing inspiration from existing work such as Pan et al. (2023). In addition, by computing the *absolute difference* between SAE feature activations from these paired processes, we isolate features strongly indicative of either verbal or symbolic reasoning facet while effectively suppressing common, non-informative features (e.g., punctuation, sentence connectors). These distilled features then guide the steering of the LLM's internal representations, promoting more focused and robust reasoning.

Additionally, we observe that even though SAE-based steering shows an incredible performance in enhancing LLMs' reasoning, there are still large amounts of LLMs that do not have associated SAEs, such as the Qwen series (Yang et al., 2025). To address this issue, we design an *SAE-free steering algorithm* to modulate the residual activation even without an associated SAE. The result shows that it achieves significant improvement in four datasets for mathematical reasoning. The contribution of this paper is the following:

- We proposed a framework named *VS Decomposition* to use SAE to extract features from vanilla CoT. It decomposes the reasoning process into two sub-processes: verbal process and symbolic process, enabling us to extract reasoning features while suppressing noise features.
- We proposed to steer the model by modulating the hidden activation employing the feature we obtained in the above step.
- We proposed an algorithm to steer LLMs without relying on SAE, which makes our steering method more applicable. The result shows that it achieves significant improvement in four mathematical reasoning datasets.

2 SAE-based Steering

2.1 Preliminary on SAE

Sparse Autoencoder (SAE) provides a method to interpret the hidden states of an LLM. It was trained to reconstruct the hidden representation. Given a hidden activation $h \in \mathbb{R}^{d_{\text{model}}}$, SAE encodes it into a sparse high-dimensional representation $\alpha \in \mathbb{R}^{d_{\text{SAE}}}$ and then decodes it to reconstruct h. The activation values in α are considered as features. These features can be explained by methods such as vocabulary projection (nostalgebraist, 2020) and visualization (McDougall, 2024), with the help of libraries such as neuronpedia.[1]

2.2 Our Motivation

Previous methods often obtained the correct features or directions by using the representation differences between long and short CoT (Tang et al., 2025; Sun et al., 2025). However, some flaws exist that we can not ignore. First, since it is costly to perform long CoT reasoning, long CoT datasets of high quality, such as Openthoughts (Team, 2025), are difficult to get. Second, compared with vanilla CoT, long CoT contains more reasoning features but also brings a large amount of noisy features

[1] https://www.neuronpedia.org/

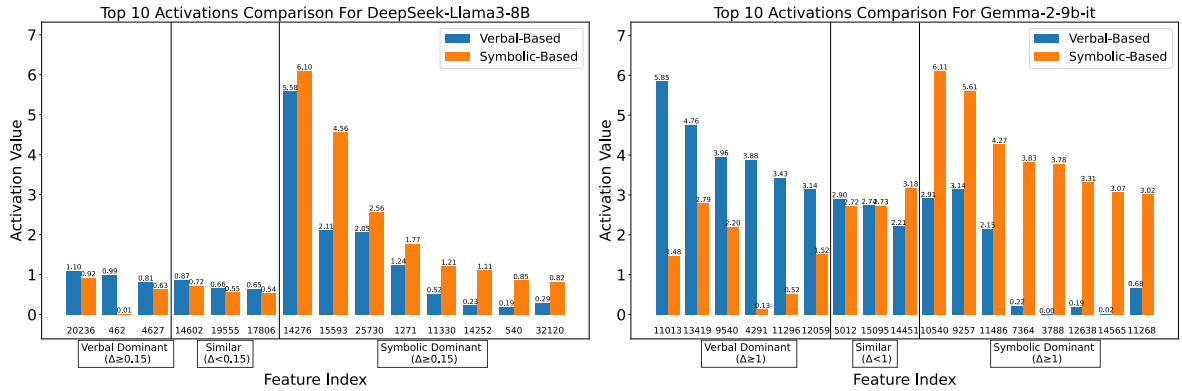

Figure 2: Top 10 activations for DeepSeek-Llama3-8B and Gemma-2-9b-it.

such as "punctuation marks" or "breaks of sentences". Based on the above reasons, we want to find a method that can extract as many useful features as possible while avoiding noisy features.

Recent work (Pan et al., 2023; Quan et al., 2025) thinks that CoT may imitate human reasoning processes due to a lack of a mechanism to guarantee the faithfulness of reasoning. In contrast, symbolic reasoning ensures inherent interpretability and verifiability by its reliance on well-defined logical principles that adhere rigorously to formal deductive systems. It illustrates the potential of unfaithful reasoning if one just relies on the common COT. Inspired by this claim, we proposed VS Decomposition which decompose the CoT of reasoning problems into two sub-processes: *Verbal Process* and *Symbolic Process*. The former provides reasoning features, while the latter provides formal features. By integrating features from both of them, we can extract useful features while suppressing noisy features.

2.3 VS Decomposition Framework

We proposed a novel framework for extracting features without relying on external datasets. It aims to maximize the extraction of reasoning-relevant features while simultaneously minimizing the effect of noisy features.

Separating Verbal and Symbolic Process. For reasoning tasks like GSM8K (Cobbe et al., 2021), the first step involves generating two sub-processes: Verbal Reasoning Process and Symbolic Reasoning Process. For example, for the problem "**Express $5^5 \div 5^4 - 5^3 + 5^2 \cdot 5^1$ as an integer**". It can be divided like this, Verbal Reasoning Process: "`First, simplify each term with the same base, starting with the division and multiplication. Next, perform the subtraction and addition operations to get the final integer result`" and the Symbolic Reasoning Process: "$5^5 \div 5^4 = 5^1 = 5, 5^3 = 125$ $5^2 \cdot 5^1 = 5^{2+1} = 5^3 = 125$ $5 - 125 + 125 = 5$ `The integer is 5.`"

SAE Feature Extraction. For each question q, we leverage the GPT4.1 API[2] to generate a Verbal Reasoning Process x and a Symbolic Reasoning Process y like this. Then we input both sub-processes into the LLM to extract residual activations $\boldsymbol{r}_i^x$ and $\boldsymbol{r}_j^y$ at layer l, where i and j represent the token position of x and y. Then we employ SAE to extract features. In detail, if $\mathcal{X}$ and $\mathcal{Y}$ represent the set of token positions of x and y, the features for the Verbal Reasoning Process and the Symbol Reasoning Process can be described as follows:

$$\begin{aligned} \boldsymbol{\alpha}^x &= \frac{1}{\|\mathcal{X}\|} \sum_{i \in \mathcal{X}} SAE(\boldsymbol{r}_i^x), \\ \boldsymbol{\alpha}^y &= \frac{1}{\|\mathcal{Y}\|} \sum_{j \in \mathcal{Y}} SAE(\boldsymbol{r}_j^y), \end{aligned} \tag{1}$$

where $\boldsymbol{\alpha}^x \in \mathbb{R}^{d_{\text{SAE}}}$ and $\boldsymbol{\alpha}^y \in \mathbb{R}^{d_{\text{SAE}}}$ are considered as the feature activation of Verbal Process and Symbolic Process at layer l.

Intergrating Features. To derive the integrated features denoted as $\boldsymbol{\alpha}$ from both reasoning processes, we can leverage the vector addition: $\alpha_t = \|\alpha_t^x + \alpha_t^y\|$, where α_t means the value of $\boldsymbol{\alpha}$ at index t, $\|\cdot\|$ means the absolute value symbol. It integrates information from both sub-processes. However, this approach suffers from noise amplification, particularly from task-irrelevant features (e.g., punctuation and sentence boundaries). To address that, we observe that the activations of such

[2] https://openai.com/index/gpt-4-1/