arXiv:2405.17931v1 [cs.CL] 28 May 2024

Online Merging Optimizers for Boosting Rewards and Mitigating Tax in Alignment

Keming Lu, Bowen Yu, Fei Huang, Yang Fan, Runji Lin, Chang Zhou
Qwen Team, Alibaba Inc.
{lukeming.lkm,yubowen.ybw,feihu.hf}@alibaba-inc.com
{suyang.fy,linrunji.lrj,ericzhou.zc}@alibaba-inc.com

Abstract

Effectively aligning Large Language Models (LLMs) with human-centric values while preventing the degradation of abilities acquired through Pre-training and Supervised Fine-tuning (SFT) poses a central challenge in Reinforcement Learning from Human Feedback (RLHF). In this paper, we first discover that interpolating RLHF and SFT model parameters can adjust the trade-off between human preference and basic capabilities, thereby reducing the alignment tax at the cost of alignment reward. Inspired by this, we propose integrating the RL policy and SFT models at each optimization step in RLHF to continuously regulate the training direction, introducing the Online Merging Optimizer. Specifically, we merge gradients with the parameter differences between SFT and pretrained models, effectively steering the gradient towards maximizing rewards in the direction of SFT optimization. We demonstrate that our optimizer works well with different LLM families, such as Qwen and LLaMA, across various model sizes ranging from 1.8B to 8B, various RLHF algorithms like DPO and KTO, and existing model merging methods. It significantly enhances alignment reward while mitigating alignment tax, achieving higher overall performance across 14 benchmarks.[1]

1 Introduction

Reinforcement Learning From Human Feedback (RLHF) has propelled the success of the most recent wave of generative AI models (Ouyang et al., 2022; Bai et al., 2022b). While RLHF garners the bonus of steering large language models (LLMs) to meet human expectations, past studies have highlighted that this approach can inadvertently lead to forgetting the diverse abilities that the LLMs have already mastered through pre-training and supervised finetuning (SFT) (Bai et al., 2022a; Zheng et al., 2023; Lin et al., 2024; Dong et al., 2024). This is evident in their declining performance on certain public language benchmarks and a loss of fundamental language skills. Additionally, responses tend to exhibit unexpected code-switching and get significantly longer (Park et al., 2024). These undesirable side effects are commonly referred to as the "alignment tax" (Dong et al., 2023; Sun et al., 2024).

Ideally, an optimal RLHF strategy should maintain the bonuses of alignment while avoiding the associated tax, striving to maximize rewards while minimizing forgetting. Relying on the linear mode connectivity of neural networks (Garipov et al., 2018; Frankle et al., 2020; Entezari et al., 2021), the trade-off in model capabilities can be succinctly described as the interpolation of model parameters (Garipov et al., 2018; Ilharco et al., 2022; Zheng et al., 2024). Studies have shown that combining different models, fine-tuned from the same pre-trained model through weight interpolation, often leads to a more balanced performance among the original models (Ilharco et al., 2023; Yadav et al., 2023; Yu et al., 2024). Motivated by this insight, we conducted initial investigations into

[1]Codes can be found at https://github.com/QwenLM/online_merging_optimizers

Preprint. Under review.

merging an RLHF model with the reference SFT model it trained from. Our observations indicate that this offline model merging effectively mitigates the alignment cost. As depicted in Tab. 4, the offline merged model restores performance comparable to the SFT model across language benchmarks and language proficiency. However, this improvement comes at the expense of a reduction in preference rewards compared to the RLHF model.

The modest performance gains from offline merging are unsurprising, given that single-time parameter interpolation only allows for trade-offs between models with fixed capabilities. During the RLHF training process, each optimization step improves the model's capabilities. Thus, we have the chance to ensure that the direction of these changes aligns with the reference SFT model. In this paper, we integrate model merging into each RLHF optimization step and introduce the Online Merging Optimizer. This innovative optimizer enhances rewards more effectively than traditional optimizers like AdamW (Loshchilov and Hutter, 2018) while simultaneously reducing the alignment tax, akin to offline merging. Specifically, we consider the alterations in model parameters before and after the SFT phase, termed delta parameters, as the final update direction for the SFT model. Throughout each RLHF step, we blend gradients with the SFT delta parameters, efficiently guiding the gradient to maximize rewards in the direction of SFT optimization. This results in well-calibrated gradients that balance reward maximization and alignment tax.

We conduct extensive experiments to demonstrate that our optimizer is effective across various dimensions: (1) for different backbones, including Qwen1.5 (Bai et al., 2023) and LLaMA3 [2]; (2) for models of different sizes, ranging from 1.5B to 8B parameters; (3) for various RLHF algorithms, such as DPO (Rafailov et al., 2024), IPO (Amini et al., 2024), and KTO (Ethayarajh et al., 2024); and (4) compatible with different offline merging algorithms, such as DARE (Yu et al., 2024) and TIES (Yadav et al., 2023). Notably, the OnDARE optimizer consistently achieves better performance across 12 benchmarks in 7 categories along with MT-Bench and AlpacaEval 2.0, surpassing all regularization and offline merging baselines, demonstrating its superior capability as an optimizer designed for RLHF.

2 Related Works

Reinforcement Learning with Human Feedback (RLHF). The objective of RLHF is to enhance the alignment of LLMs with human preferences and values, aiming to generate responses that are more helpful, accurate, and safer (Ouyang et al., 2022; Bai et al., 2022b; Ji et al., 2023). Essentially, RLHF techniques treat human preferences as rewards and employ online or offline RL algorithms (Zhao et al., 2023; Rafailov et al., 2024; Amini et al., 2024; Ethayarajh et al., 2024; Song et al., 2024; Yuan et al., 2023c), to achieve this alignment. Typically, RLHF is built upon models trained via SFT (Wang et al., 2023; Xu et al., 2024; Lu et al., 2024; Wu et al., 2023). One of the biggest challenges in RLHF is the bonus-tax trade-off (Ouyang et al., 2022; Lin et al., 2024), which shows RLHF models forget basic language modeling while pursuing high rewards. In this work, we mitigate this issue by using online merging optimizers, which have proven effective across various sizes and backbone LLM families.

Continual Learning (CL). The Alignment Tax can be viewed as a form of catastrophic forgetting in CL. Catastrophic forgetting refers to a dramatic degradation of performance on old tasks when learning new tasks(Goodfellow et al., 2013; Kirkpatrick et al., 2017; Wang et al., 2024). For example, constraining the shift in output space between reference and policy models (Ouyang et al., 2022; Rafailov et al., 2023)) is a common strategy employed in continual learning (Li and Hoiem, 2017; Rebuffi et al., 2017; Wang et al., 2024). However, traditional methods mitigating forgetting issues in CL usually require data for previous training tasks for experience replay, which may be impractical for current open- or closed-source LLMs, whose alignment data is in-house and already multi-task. Although we mainly experiment with our online merging optimizers on LLM alignment, they can be applied to a wider range of CL scenarios in the future.

Robust Fine-tuning. Overcoming alignment tax can be seen from another perspective, similar to overcoming generalization degradation, involving the research area of robust fine-tuning. Nonetheless, robust fine-tuning methods often necessitate supplementary forward and backward computations, rendering them inefficient for large-scale models (Liang et al., 2021; Aghajanyan et al., 2021; Jiang

[2] https://ai.meta.com/blog/meta-llama-3/

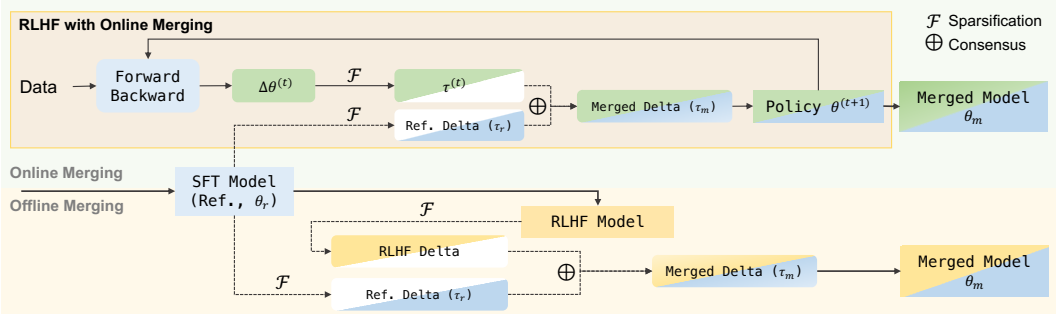

Figure 1: An illustrastion of RLHF with online merging optimizers described in §4. In each RLHF iteration, we first obtain the update weight $\Delta\theta^{(t)}$, and then sparcify it and make a consensus with the delta parameters of the reference model. We use this merged delta as the update of the policy model in this iteration. We also compare online merging with offline merging, shown in the lower part of the figure and further introduced in §3.

et al., 2020; Yuan et al., 2023a). Some works aim to enhance robustness by eliminating invaluable parameter updates during training to achieve robust generalization (Lee et al., 2020; Jiang et al., 2022; Xu et al., 2021). Our proposed optimizer can be viewed as an extension of these gradient dropout methods. However, we further derive that merging the gradients with the delta parameters of the SFT model can better balance alignment rewards and tax. Comprehensive experiments show our methods surpass established robust fine-tuning baselines in alignment scenarios.

Offline Model Merging. Model merging is widely studied as an effective training-free method to combine the capabilities of fine-tuned large language models (Wortsman et al., 2022; Lin et al., 2023; Matena and Raffel, 2022). Ilharco et al. (2023) proposed the concept of a "task vector" (also referred to as “delta parameters”) and demonstrates that the arithmetic combination of them can adjust model behaviors. Yadav et al. (2023) further addressed conflicts between different task vectors through norm-based sparsification and consensus on the signs of weights. Tam et al. (2024) employed the conjugate gradient method to find the optimal merging combination. Yu et al. (2024) shown LLMs are highly robust to sparsify task vectors and proposes DARE for merging LLMs with random sparsification. Recently, Lin et al. (2024) demonstrates that simple offline model averaging can help mitigate alignment tax. Unlike these offline model merging methods that combine the parameters of different models in one shot, our work introduces an approach where, at each step of RLHF optimization, we online merge the gradients of the policy model with the delta parameters of the SFT model. Our results show that this optimizer is more effective than offline merging in boosting alignment rewards while eliminating alignment tax.

3 Preliminaries and Motivations

In this section, we begin by briefly defining alignment tax and introducing offline model merging. We then present preliminary results indicating that while offline merging can reduce alignment tax, it also diminishes rewards. These findings motivate our proposal for online merging optimizers.

Alignment Tax. Typically, aligning LLMs with human preferences involves two phases: SFT to establish an instruction-following model, followed by RLHF for enhanced human preference (Ouyang et al., 2022). Current mainstream RLHF methods, such as PPO (Ouyang et al., 2022) and DPO (Rafailov et al., 2023), guide the model to optimize the reward while incorporating a Kullback-Leibler (KL) divergence penalty between the output of learned RL policy and the reference SFT model. This penalty prevents the policy from deviating too far from its original goal of maintaining acquired language proficiency while pursuing preference rewards. However, despite these efforts, RLHF models still exhibit fluctuations in performance across various NLP tasks and language capabilities (Park et al., 2024). We experimented with different KL divergence weights β in the DPO setting, as shown in Fig. 4. An increase in β correlates with an elevation in the mean benchmark performance, albeit at the expense of diminished performance on MT-Bench and AlpacaEval. Conversely, reducing β leads the model to lose its fundamental abilities. Struggling to balance reward optimization and maintaining linguistic taxonomies has become the foremost challenge in RLHF training.

Model Merging. Instead of relying solely on the KL penalty to constrain the variation of the model's output space, we aim to find a trade-off path between the parameters of SFT and RLHF. This enables us to freely adjust whether the final model leans towards maximizing reward or minimizing tax. Our objective relies on the discovery of Mode Connectivity (Garipov et al., 2018), which suggests that the local optima of modern deep neural networks are connected by simple curves, like a polygonal chain with only one bend. These connections are often categorized under model merging methods. In this work, we specifically focus on general task arithmetic merging methods, which have proven effective in combining the abilities of fine-tuned models and have good characteristics such as linearity. Here, we present a straightforward merging case where parameters θ_s and θ_r, trained from the same pre-trained model θ_b, are merged. The new capabilities learned by θ_s and θ_r relative to θ_b can be represented by their delta parameters: $\tau_s = \theta_s - \theta_b$ and $\tau_r = \theta_r - \theta_b$. Merging methods typically begin by applying a sparsification operation to each delta parameter and then linearly combining them using consensus methods to derive the merged model $\theta_m = \theta_b + \tau_m = \theta_b + \mathcal{F}(\tau_s) \oplus \mathcal{F}(\tau_r)$, where $\mathcal{F}(\cdot)$ denotes a sparsification operator with corresponding hyper-parameters p, and $\oplus$ represents the consensus method used to handle parameter interference. For instance, Yadav et al. (2023) employed top-k sparsification and sign-based consensus, while Yu et al. (2024) utilized random sparsification and linear combination to achieve this merging process.

Offline Merging Mitigates Alignment Tax at Cost. To investigate whether Model Merging can restore the ability of the aligned model to recover the SFT model's capability, we conducted preliminary experiments. As shown in Tab. 4, we observe that the current mainstream model merging methods, when merging the SFT model and RLHF model, indeed improve performance across various linguistic abilities compared to the RLHF model, and outperform the SFT model on average. However, this improvement comes at the cost of decreased human preference, evidenced by a significant drop in MT-Bench and AlpcaEval 2.0 scores. In other words, while merging the SFT and RLHF models once can alleviate alignment tax, it also substantially diminishes the alignment bonus.

From Offline Merging to Online. It is not surprising that simply merging the SFT and RLHF models in an offline, one-time manner did not yield satisfactory results, as our reliance on the Mode Connectivity assumption has indicated that interpolating parameters results in interpolated model performance. Thus, finding a single point along this continuum that outperforms both ends of the spectrum simultaneously is indeed challenging. However, through iterative model merging at each step of RLHF training, integrating the strengths of SFT with each update to maximize reward, we can progressively steer our training trajectory. This online merging could lead us to discover local minima that effectively balance foundational capabilities and human preferences.

4 Online Merging Optimizers

Motivated by the offline merging, we explore incorporating model merging into the RLHF optimization steps in this section. We begin by examining the commonly used gradient-based optimizers. At each optimization step t, LLM parameters are adjusted according to $\theta^{(t+1)} = \theta^{(t)} + \Delta\theta^{(t)}$, where $\Delta\theta^{(t)}$ is a gradient-based weight modification. For instance, in the Adam optimizer (Kingma and Ba, 2017), $\Delta\theta$ is computed using the normalized gradient by exponential moving average, as shown in Alg. 1. From the perspective of model merging, in RLHF training, $\Delta\theta^{(t)}$ can be seen as a representation of improved human preference—a set of parameters ready to be merged into the policy model at step t. By post-processing $\Delta\theta^{(t)}$ to encapsulate not only human preference but also the basic capabilities of the SFT model, we can achieve an online merging of the RLHF policy model and the SFT model. To implement this concept, we propose an online merging optimizer.

4.1 From Gradient-based Optimizer to Online Merging Optimizer

As introduced in §3, offline task arithmetic techniques merge LLMs by aggregating their delta parameters as $\theta_m = \theta_b + \tau_m = \theta_b + \mathcal{F}(\tau_s) \oplus \mathcal{F}(\tau_r)$. In alignment, we aim to merge the reference SFT model θ_r and the policy model $\theta^{(t+1)}$ at the t-th training step. Here, we define the merged parameter at step t as:

$$\theta^{(t+1)} = \theta_b + \mathcal{F}(\theta^{(t)} - \theta_b + \Delta\theta^{(t)}) \oplus \mathcal{F}(\theta_r - \theta_b) = \theta_b + \mathcal{F}(\tau^{(t)} + \Delta\theta^{(t)}) \oplus \mathcal{F}(\tau_r), \quad (1)$$