arXiv:2402.11187v2 [cs.CL] 15 Oct 2024

LaCo: Large Language Model Pruning via Layer Collapse

Yifei Yang[1,2,3], **Zouying Cao**[1,2,3], **Hai Zhao**[1,2,3]*
[1]Department of Computer Science and Engineering, Shanghai Jiao Tong University
[2]Key Laboratory of Shanghai Education Commission for Intelligent Interaction and Cognitive Engineering, Shanghai Jiao Tong University
[3]Shanghai Key Laboratory of Trusted Data Circulation and Governance in Web3
{yifeiyang,zouyingcao}@sjtu.edu.cn, zhaohai@cs.sjtu.edu.cn

Abstract

Large language models (LLMs) based on transformer are witnessing a notable trend of size expansion, which brings considerable costs to both model training and inference. However, existing methods such as model quantization, knowledge distillation, and model pruning are constrained by various issues, including hardware support limitations, the need for extensive training, and alterations to the model internal structure. In this paper, we propose a concise layer-wise structured pruner called *Layer Collapse (LaCo)*, in which rear model layers collapse into a prior layer, enabling a rapid reduction in model size while preserving the model structure. Comprehensive experiments show that our method maintains an average task performance of over 80% at pruning ratios of 25-30%, significantly outperforming existing state-of-the-art structured pruning methods. We also conduct post-training experiments to confirm that the *LaCo* effectively inherits the parameters of the original model. Additionally, we perform ablation studies on various settings of *LaCo*. Finally, we discuss our motivation from the perspective of layer-wise similarity and evaluate the performance of the pruned LLMs across various pruning ratios[1].

1 Introduction

Recently, large language models (LLMs) based on Transformer (Vaswani et al., 2017) have showcased impressive capabilities across diverse tasks. However, the prevailing trend in model development leans towards larger scales, placing substantial demands on computational resources.

To mitigate the above challenge, various approaches have been explored to reduce the inference and training costs of models or to derive a smaller model from an LLM, including model quantization (Dettmers et al., 2022; Yao et al., 2022; Xiao et al., 2023), knowledge distillation (Liu et al., 2022; Hsieh et al., 2023; Shridhar et al., 2023), and model pruning (Zhang et al., 2022; Frantar and Alistarh, 2023; Ma et al., 2023). However, existing solutions exhibit certain notable drawbacks. Model quantization typically necessitates specific hardware support and often impacts model performance. Knowledge distillation often requires retraining a smaller model, which is costly and task-specific. Model pruning, whether non-structured or structured, has its issues. Non-structured pruning often involves model sparsity, which generally leads to certain performance loss and also relies on hardware support. Structured pruning entails removing specific modules, often altering the model structure and diminishing the model portability.

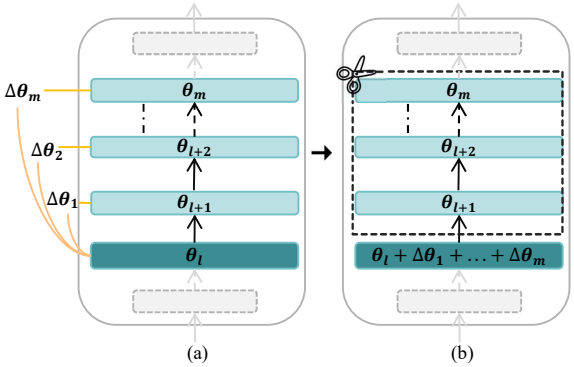

Figure 1: An example of *Reserving-Differences-while-Seeking-Common (RDSC) Layer Merge*. In (a), we perform parameter differencing, which we regard as Reserving-Differences. In (b), we conduct parameter merging, which we interpret as Seeking-Common.

Considering the above issues, we contemplate directly pruning the model with a new idea: to prune some layers directly from a well-trained LLM and substitute the parameters of one layer for multiple layers, enabling effective model pruning.

Specifically, we observe that merging the param-

* Corresponding author. This research was supported by the Joint Research Project of Yangtze River Delta Science and Technology Innovation Community (No. 2022CSJGG1400), the Joint Funds of the National Natural Science Foundation of China (Grant No. U21B2020).

[1]https://github.com/yangyifei729/LaCo