arXiv:2507.17785v1 [cs.LG] 23 Jul 2025

# Self-similarity Analysis in Deep Neural Networks

**Jingyi Ding[1*], Chengwen Qi[1], Hongfei Wang[1], Jianshe Wu[1], Licheng Jiao[1], Yuwei Guo[1], Jian Gao[1]**

[1]School of Artificial Inteligence, Xidian University,China
jyding@xidian.edu.cn,24171214007@stu.xidian.edu.cn

## Abstract

Current research has found that some deep neural networks exhibit strong hierarchical self-similarity in feature representation or parameter distribution. However, aside from preliminary studies on how the power-law distribution of weights across different training stages affects model performance, there has been no quantitative analysis on how the self-similarity of hidden space geometry influences model weight optimization, nor is there a clear understanding of the dynamic behavior of internal neurons. Therefore, this paper proposes a complex network modeling method based on the output features of hidden-layer neurons to investigate the self-similarity of feature networks constructed at different hidden layers, and analyzes how adjusting the degree of self-similarity in feature networks can enhance the classification performance of deep neural networks. Validated on three types of networks—MLP architectures, convolutional networks, and attention architectures—this study reveals that the degree of self-similarity exhibited by feature networks varies across different model architectures. Furthermore, embedding constraints on the self-similarity of feature networks during the training process can improve the performance of self-similar deep neural networks (MLP architectures and attention architectures) by up to 6%.

## Introduction

Neural network models, especially deep neural networks, have achieved remarkable success across various domains due to their powerful representation learning capabilities (LeCun, Bengio, and Hinton 2015). Numerous studies currently leverage complex network theory (La Malfa et al. 2024) to explain the dynamic behavior of internal neurons, with particular emphasis on understanding structural properties such as small-worldness (Watts and Strogatz 1998), scale-freeness (Barabási and Albert 1998), and self-similarity (Song, Havlin, and Makse 2005). These topological characteristics hold significant importance for enhancing model interpretability, improving performance, and designing novel architectures.

Traditional approaches typically directly map a model's connection onto a complex network and subsequently analyze its topological properties (Testolin, Piccolini, and Suweis 2020)(Zambra, Maritan, and Testolin 2020). However, this methodology overlooks the dynamic structural changes induced by model training and fails to capture the deep information associations embedded in neuronal activation states. Furthermore, given the substantial architectural differences among neural network models, the resulting complex network connection patterns vary considerably. This diversity highlights the lack of a universal, standardized method for analyzing and comparing the intrinsic network properties across different structures.

Therefore, this paper proposes a new perspective for studying the internal mechanisms of deep network models. By utilizing the output features of hidden-layer neurons during the feedforward process, we construct a dynamic complex network that reflects the intrinsic information relationships within the model.

Self-similarity, as one of the core topological characteristics of complex networks, originates from the intersection of fractal geometry and statistical physics. It manifests as scale invariance in the statistical properties between network substructures and the whole network (Song, Havlin, and Makse 2005). In the field of neural networks, research on self-similarity reveals two primary trends: structural embedding and data-driven approaches. Some studies attempt to deliberately integrate self-similarity into network architectures through fractal stacking (Larsson, Maire, and Shakhnarovich 2016), hierarchical connection control (Dorogov 2021a)(Dorogov 2021b), or modular repetition (Krizhevsky, Sutskever, and Hinton 2012) to construct models with inherent self-similar properties. These methods demonstrate that structural self-similarity may benefit model performance.

Other research primarily explores leveraging the self-similarity inherent in data itself to facilitate model learning (Wewer et al. 2023)(Liang et al. 2020). However, both structural embedding and data-driven approaches lack in-depth analysis of how the intrinsic self-similarity of neural networks dynamically influences the optimization process of parameters. Therefore, this paper designs a self-similarity evaluation metric SS_rate for the $G_M$ of hidden-layer feature networks. We observe its variations during training and incorporate it into the loss function as a differentiable regularization term to dynamically constrain and guide the model learning process. In summary, the contributions of our work are

- Proposes an architecture-agnostic complex network modeling method based on hidden-layer features that

captures parameter dynamics.

- Designs SS_rate — a differentiable and computationally efficient self-similarity metric for feature networks ($G_M$) — enabling its direct integration into loss functions to dynamically constrain and optimize model self-similarity.
- Reveals distinct $G_M$ visualization patterns across diverse deep neural network models, linking these variations to their computational paradigms;
- Observes a pervasive degradation of self-similarity in feature networks during training; and demonstrates that SS_rate-based regularization enhances performance in networks with intrinsic self-similar characteristics.

## Related Work

**Complex Network Properties of Neural Networks**: Biological studies (Monteiro et al. 2016) identify small-worldness and scale-freeness as critical topological properties governing learning efficiency in biological neural networks, revealing their essential role in accelerating knowledge acquisition.(Erkaymaz, Ozer, and Perc 2017) Research on feedforward networks (FFNs) demonstrates that small-world architectures actively enhance model performance by optimizing information propagation pathways.(You et al. 2020) Adopting an approach similar to ours, this work models neural networks as complex systems and identifies optimal topological configurations through systematic screening of clustering coefficients and average path lengths.(Xie et al. 2019) By generating neural architectures via parametric complex network generators, this study establishes quantifiable correlations between generator parameters, topological features, and model performance.(Scabini and Bruno 2023)A graph-based representation for fully connected networks is proposed, employing complex network theory to analyze structure-function relationships. This approach reveals emergent topological patterns under diverse weight initialization schemes.(La Malfa et al. 2021) This work introduces specialized metrics (e.g., node strength, layer-wise fluctuations) for analyzing fully connected and convolutional networks. These tools provide critical insights into structural evolution during training processes.

**Self-Similarity in Neural Networks**:Current research predominantly focuses on utilizing the intrinsic connection structures of neural networks as the basis for investigating network properties. Key advancements in this domain include:(Larsson, Maire, and Shakhnarovich 2016)introduces fractal blocks that recursively combine shallow sub-networks to construct ultra-deep architectures, eliminating the need for residual connections.(Dorogov 2021a) and (Dorogov 2021b) jointly establish a theoretical-design-application framework for self-similar neural networks. Inspired by biological modularity, these works transform morphological principles into computational engineering solutions through stratified modeling, providing new paradigms for efficient training and hardware implementation.(Han et al. 2021) decomposes images into "visual sentences" (image patches) and "visual vocabulary" (sub-patches), employing dual-layer Transformers to simultaneously model local details and global relationships. This fractal-inspired approach creates intrinsically self-similar architectures. A distinct research direction investigates self-similarity within training data rather than network structures:(Wewer et al. 2023) pioneers a learnable self-similarity prior for neural representations, establishing a novel methodological foundation for 3D reconstruction.(Liang et al. 2020) develops a video super-resolution reconstruction method leveraging spatio-temporal feature self-similarity, simultaneously enhancing video quality while optimizing temporal efficiency and eliminating frame-jitter artifacts.(Lee et al. 2023) proposes a unified approach that captures internal image structures while progressively compressing them into dense self-similarity descriptors.

## Method

To investigate the internal working mechanisms of neural network models, this paper proposes a dynamic complex network modeling method based on the output features of hidden-layer neurons. This approach studies the self-similarity of feature networks constructed in different hidden layers, starting from the perspective of how intrinsic self-similarity dynamically influences the optimization process of network parameter learning. We design a self-similarity metric SS_rate as a differentiable regularization term to constrain model training, thereby controlling the model optimization process. The specific framework is shown in Figure 1.

### Building Feature Networks $\mathbf{G_M}$

$G_M$ is a graph structure constructed from the feedforward hidden-layer features of neural network model $M$, which encodes both the inherent data patterns of the model's latent representations and intrinsically embeds its internal data processing mechanisms. The implementation workflow is detailed in Algorithm 1.

Algorithm 1: Topology Graph $G_M$ Construction

**Require:** Neural network model $M$, input data $X \in \mathbb{R}^B$
**Ensure:** Feature matrix $F \in \mathbb{R}^{(D,B)}$, topology graph $G_M$

1: Compute feedforward hidden features
$H_1(B, d_0, d_1, \ldots, d_n) \leftarrow M(X)$
2: Dimension compression
$H_2(B, D) \leftarrow \text{ReduceMean}(H_1)$
3: Matrix transpose
$F(D, B) \leftarrow H_2^\top$
Obtain feature matrix $F$ ($D$ nodes with feature dimension $B$)

Among these, the implementation of the ReduceMean operation may vary depending on the data format being processed, and the following approaches are possible but not exclusive:

- For $BDHW$-shaped data (batch × depth × height × width), compute the mean value along the height and width dimensions.
- For $BND$-shaped data (batch × node × dimension), compute the mean along the node dimension.

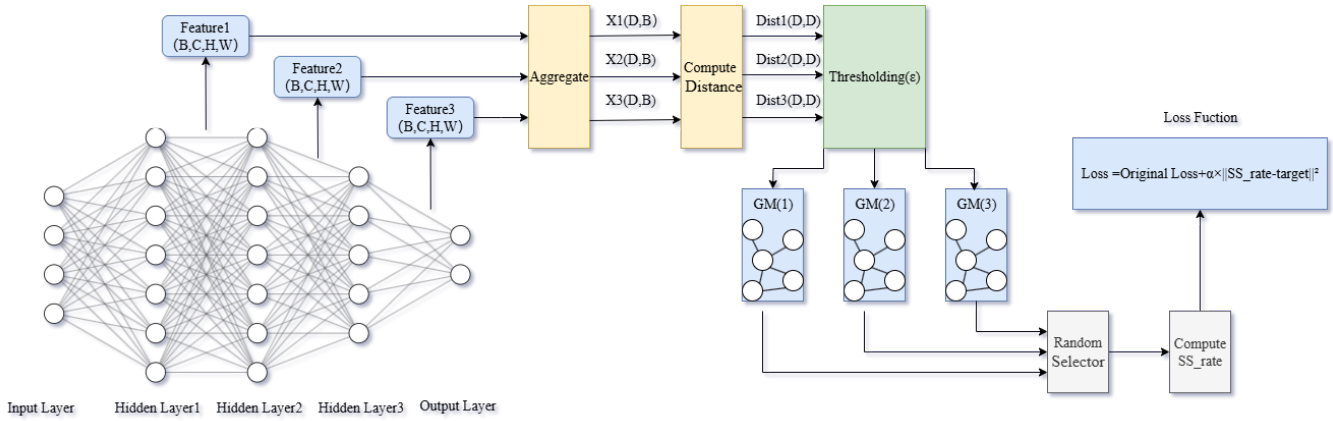


Figure 1: Application workflow of the proposed method on a three-layer fully connected neural network. The diagram illustrates feature extraction, distance computation, $G_M$ processing, and loss integration mechanisms.

$G_M$ can be viewed as a complex network comprising $D$ nodes, where each node possesses a $B$-dimensional feature vector. The connections between nodes are determined by computing the Euclidean distance between their feature vectors.

$$A_{ij} = \begin{cases} 1, & \text{if } \|F_i - F_j\|_2 < \epsilon \\ 0, & \text{otherwise} \end{cases} \tag{1}$$

where $A$ is the adjacency matrix of $G_M$, and $\epsilon$ denotes the preset threshold.

## Quantitative Calculation of Self-Similarity

After obtaining the feature network, the next step is to quantitatively describe the degree of self-similarity for $G_M$. Drawing on the idea of the box-cover method(Kovács, Nagy, and Molontay 2021), this paper proposes a modified box-cover algorithm(Appendix A), as shown in Algorithm 2. The aim is to decompose the feature network $G_M$ into $N_\theta$ local structures (boxes), where nodes within each box are mutually reachable within a limited distance ($\theta \geq 0$).

When $G_M$ is a standard fractal network, the number of boxes $N_\theta$ in its network decomposition varies with $\theta$ as follows:

$$N_\theta \sim (1+\theta)^{-d_B} \tag{2}$$

which means that in logarithmic coordinates, $\log(N_\theta)$ and $\log(1+\theta)$ have a linear relationship. Therefore, the degree of self-similarity of $G_M$ can be measured by calculating the deviation of the actual distribution curve from the linear distribution curve.

This paper proposes using the self-similar rate (Self-similar rate, SS_rate) as an indicator to measure the self-similarity of $G_M$. The formula for calculating SS_rate is shown in Formula(3-5).

$$\begin{aligned} \text{SS_rate}(G_M) &= \frac{2}{D\big(lo(TV) - lo(TZ)\big)} \\ &\times \int_{TZ}^{TV} \Big| \log N_\theta - pf(\theta) \Big| d\log(1+\theta) \end{aligned} \tag{3}$$

Algorithm 2: Self-Similarity Metric $N_\theta$ Calculation for Graph Structure $G_M$

**Require:** Graph structure $G_M$ and its feature map $F \in \mathbb{R}^{D\times B}$

**Ensure:** Metric $N_\theta$

1: Compute distance matrix $C \in \mathbb{R}^{D\times D}$:
$C_{ij} = \frac{\|F_i - F_j\|_2}{\sqrt{B}}$

2: Define connectivity probability distribution function:
$p(C \leqslant \theta) = \frac{\sum_{i=1}^{D}\sum_{j=1}^{D} \mathbb{I}(C_{i,j} \leqslant \theta)}{D(D-1)}$
(proportion of connections where $C_{ij} \leqslant \theta$)

3: Calculate metric $N_\theta$:
$N_\theta = 1 + (D-1)\log_D\left(D + (1-D)p(C \leqslant \theta)\right)$

4: Ensure differentiability through gradient flow:
$\frac{\partial p(C \leqslant \theta)}{\partial C_{ij}} = \text{fac} \cdot \frac{\partial}{\partial C_{ij}} \text{sigmoid}\left(k(\theta - C_{ij})\right)$
where $fac$ is the gradient scaling factor, $k$ is the smoothing factor

$$pf(\theta) = \frac{lo(TV) - lo(\theta)}{lo(TV) - lo(TZ)} \cdot \log D \tag{4}$$

$$lo(x) = \log(1+x) \tag{5}$$

Among them, $D$ represents the number of nodes in $G_M$, while $TZ$ and $TV$ refer to the minimum and maximum values of $\theta$, respectively. The value of SS_rate ranges between 0 and 1; the closer it is to 0, the stronger the power-law relationship of $N_\theta$, indicating a stronger self-similarity of $G_M$. Conversely, the closer it is to 1, the weaker the power-law relationship of $N_\theta$, indicating a weaker self-similarity of $G_M$.

## Loss Function

Since model M has multiple hidden layers, there will also be multiple ($G_M$). Each $G_M$ possesses its own SS_rate metric. Constructing a monolithic $G_M$ by combining all hidden layers would incur prohibitive computational complexity. To