Future Lens: Anticipating Subsequent Tokens from a Single Hidden State

Koyena Pal
Northeastern University
pal.k@northeastern.edu

Jiuding Sun
Northeastern University
sun.jiu@northeastern.edu

Andrew Yuan
UMass Amherst
awyuan@umass.edu

Byron C. Wallace
Northeastern University
b.wallace@northeastern.edu

David Bau
Northeastern University
d.bau@northeastern.edu

arXiv:2311.04897v1 [cs.CL] 8 Nov 2023

Abstract

We conjecture that hidden state vectors corresponding to individual input tokens encode information sufficient to accurately predict several tokens ahead. More concretely, in this paper we ask: Given a hidden (internal) representation of a single token at position t in an input, can we reliably anticipate the tokens that will appear at positions $\geq t + 2$? To test this, we measure linear approximation and causal intervention methods in GPT-J-6B to evaluate the degree to which individual hidden states in the network contain signal rich enough to predict future hidden states and, ultimately, token outputs. We find that, at some layers, we can approximate a model's output with more than 48% accuracy with respect to its prediction of subsequent tokens through a single hidden state. Finally we present a "Future Lens" visualization that uses these methods to create a new view of transformer states.

1 Introduction

Do hidden states in large language models (LLMs) encode tokens farther than a single token ahead? If so, how can we decode this sequence of tokens from a single state? In this work we empirically investigate these questions using GPT-J-6B (Wang and Komatsuzaki, 2021). We train models to predict hidden states several tokens ahead of a given position t based *only* on a contextualized representation of the input at this position.

Auto-regressive transformer language models are typically trained to predict one token ahead, but recent work has hinted that individual hidden states may contain more information than just probabilities of the following token. For example, Meng *et al.* (2022a) trace information flow from subject tokens to associated attribute predictions many steps ahead. Elsewhere, Gurnee *et al.* (2023) suggest that neurons in early layers are dense with information, while middle layers have dedicated neurons that represent high-level contextual features.

Other related efforts have passed hidden intermediate states directly to the decoder head (skipping in-between layers) to "verbalize" such embeddings (Din et al., 2023; Belrose et al., 2023; nostalgebraist, 2020). Studies of memorization (Carlini et al., 2021, 2023, 2019) have identified the presence of very long memorized sequences generated by language models, and Zhang and He (2020) shows that progressively dropping layers during computation can still achieve a similar prediction output of the model when compared against their fully computed model run.

In this work we ask: To what extent can we extract information about future (beyond subsequent) tokens from a single hidden token representation? To answer this, we conduct three experiments. First, extending the ideas of Tuned Lens (Belrose et al., 2023; Din et al., 2023) and the Logit lens (nostalgebraist, 2020), we train linear models to approximate future model predictions several tokens in the future, in order to reveal the extent to which individual hidden states may directly encode subsequent tokens. Second, we perform a causal intervention study in which we transplant individual hidden states from one context to a completely different context and measure the extent to which future tokens that were predicted in the original context can be predicted in the foreign context. Finally, we fit a "soft prompt" to explicitly learn an optimal prompt that permits reading out information about subsequent tokens from a hidden state. Our code and data is available at https://future.baulab.info

2 Methods

To unveil the information about "future" tokens implicitly encoded in a single transformer state vector, we develop and compare several methods for predicting future tokens from a single hidden state. Each of our methods has the same goal: Extract accurate predictions of a model's probability distribution several tokens ahead, based on the in-

formation in only one hidden state at a single layer at one token of the transformer.

For our evaluations we use an autoregressive transformer (Vaswani et al., 2017) language model defined as a function $G : X \to Y$ over vocabulary V of size $|V| = d_v$. G takes in a sequence of tokens $x = [x_1, ..., x_T] \in X, x_i \in V$ and maps this to a probability distribution $y_T \in Y \subset [0,1]^{d_v}$, which (greedily) predicts the next-token $x_{T+1} = \text{argmax}\, y_T$. To generate additional tokens, the top predicted token x_{T+1} is added to the sequence of tokens $[x_1, ..., x_T, x_{T+1}]$ and the process is repeated until the next N tokens are produced.

To calculate each predicted probability distribution from an input sequence x, the transformer performs a sequence of computations at L layers; this can be decomposed as:

$$G(x) = D(b_L(\cdots(b_2(b_1(E(x))))\cdots)) \quad (1)$$

Where the first step $E :\to \mathbb{R}^{d_h}$ embeds each input token into an initial hidden representation, $e(x_i) = h_i^0 \in \mathbb{R}^{d_h}$; each layer $b_l : \mathbb{R}^{d_h \times T} \to \mathbb{R}^{d_h \times T}$ transforms the sequence of representations; and the decoder $D : \mathbb{R}^{d_h} \to Y$ decodes the predicted probability distribution $y_T = D(h_T^L)$ from the last layer at the last token. We write the output of layer l as $H_l = b_l(H^{l-1})$, where:

$$H^l = (h_1^l, ..., h_T^l) \in \mathbb{R}^{d_h \times T} \quad (2)$$

When generating a sequence of tokens beyond the given starting prefix of length T, we write:

$$y_{T+i} = G([x_1, .., x_{T+i-1}, x_{T+i}]) \quad (3)$$

$$x_{T+i+1} = \text{argmax}\, y_{T+i} \quad (4)$$

Our goal is to devise methods that can anticipate what G will predict for y_{T+1} through y_{T+N} from only a single hidden state at h_T^l.

2.1 Direct Vocabulary Prediction

Let h_T^l denote the hidden representation induced by G for token x_T at intermediate layer $l \leq L$, and let y_{T+N} denote the subsequent-token distribution predictions produced by G after token x_{T+N}. To predict y_{T+N} from h_T^l alone, we train a linear model g_θ to predict logits $\hat{z}_{T+N}$ that approximate $\hat{y}_{T+N}$ after softmax:

$$\hat{z}_{T+N} = g_\theta(h_T^l) \quad (5)$$

$$\hat{y}_{T+N} = \text{softmax}(\hat{z}_{T+N}) \approx \hat{y}_{T+N}$$

Since this model directly predicts the subsequent predictions over the full vocabulary from h_T^l, we call it the direct vocabulary prediction model.

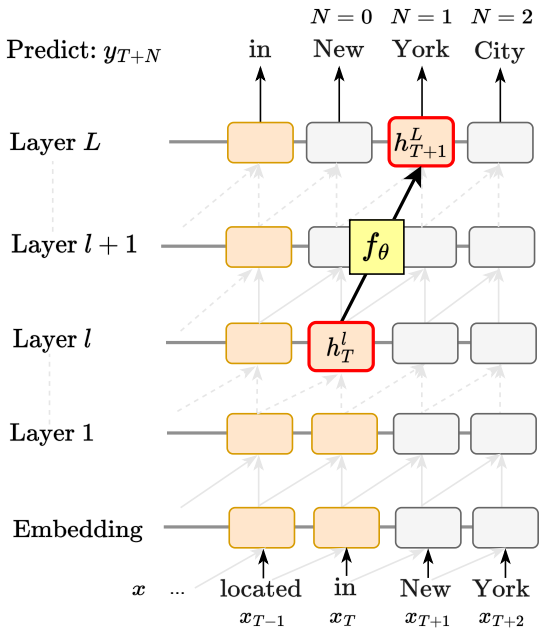

Figure 1: LLM to Linear Model Approximation Overview. Given a hidden state, h_T^l, the linear model, f_θ, is trained to output a future hidden state h_{T+1}^L. In this example, h_T^l is the encoding that would lead to the prediction of 'New,' and f_θ uses only that information to predict h_{T+1}^L that would predict 'York.'

2.2 Linear Model Approximation

We also test a linear model based on the tuned logit lens (Belrose et al., 2023; Din et al., 2023) approach, which anticipates future hidden states within the transformer and decodes them using the pretrained decoder head. Differently from that work, we model hidden states at future tokens in rather than only at later layers.

Beginning with the hidden representation h_T^l, we create a model to predict a hidden state h_{T+N}^L at the final layer L, and subsequent token x_{T+N}. To predict h_{T+N}^L from h_T^l, we train a linear model:

$$\hat{h}_{T+N}^L = f_\theta(h_T^l) \approx h_{T+N}^L \quad (6)$$

The vocabulary can be read from the predicted $\hat{h}_{T+N}^L$ by applying the pretrained decoder head of the transformer. In Figure 1, we show an example of one such linear model. Suppose that we have trained a linear model parameterized by θ, f_θ, that takes in the last token hidden representation of the input at layer l to generate a hidden state at layer L of the following token hidden representation. When we input the following in G: "Madison Square Garden is located in", we get "New" as the highest-probability prediction at $N = 0$ and "York"

at $N = 1$. We use the linear model to approximate this based on the hidden representation of T_N (i.e., "in") at layer $l \leq L$ as our input; the ideal output of the linear model given this would be the hidden state at T_{N+1} and layer L, which is associated with predicting "York" as the most probable token.

This approach differs from the direct vocabulary approach by reusing the pretrained decoder head of the transformer. We find that this marginally aids predictions at the latest layers l near L. Based on the observation that other pretrained transformer parameters may encode memorized calculations that facilitate decoding of subsequent tokens, we next turn to other approaches that utilize larger portions of the pretrained transformer to predict future tokens.

2.3 Fixed Prompt Causal Intervention

The next method we consider involves a single-state causal intervention where we transplant the hidden state h_T^l into the transformer while it is decoding an unrelated bit of context. The question is whether this transplantation steers the model to generate tokens related to the prefix that induced h_T^l. If it does, this indicates that information about subsequent tokens (in the original sequence) is prominently encoded in h_T^l.

Figure 2 depicts the procedure. On the left, we show the original context from which h_T^l is read; here $x = [x_1, ..., x_T]$ is "Madison Square Garden is located in" where x_1 is "Madison" and x_T is "in". This results in a sequence of outputs $[x_{T+1}, ..., x_{T+N}]$ which will read "New York City." On the right, we run a single generic fixed-context prompt $c = [c_1, ..., c_M]$ (e.g., "Please, tell me something about" where c_1 is "Please" and c_M is "about") through the transformer. One would not anticipate that this generic prompt would cause the transformer to predict "New York City".

Using an intervention, we now directly test that hypothesis that a single hidden state at layer l and token T within the original run contains the information necessary to predict subsequent tokens. We transplant the original run's state vector h_T^l into the corresponding location h_M^l in the fixed-context run, then allow the transformer to proceed. If the necessary contextual information is present in the new run, the resulting tokens generated would become "New" for the current token generation and "York" and "City" for the subsequent token generations.

Formally, let the sequence $x = [x_1, ..., x_T]$ denote an input context that causes the model to subsequently generate $[x_{T+1}, ..., x_{T+N}]$, and let and $c = [c_1, ..., c_M]$ represent a generic fixed-context prompt where T and M represent the lengths of the original and fixed input prompts, respectively. When each are passed through G, we get the following predicted distributions:

$$y_T = G(x) \in [0,1]^{|V|} \qquad (7)$$
$$\hat{y}_M^* = G(c) \in [0,1]^{|V|}$$

Denote the intervention that replaces h_M^l from the fixed-context run with state h_T^l from the original run as:

$$\hat{y}_M = G(c \,||\, h_M^l := h_T^l) \qquad (8)$$

If, after the intervention, the new predicted distribution $\hat{y}_M \approx y_M$ approximates the prediction in the original context, that will reveal that h_T^l specifically encodes information needed for that prediction.

Furthermore, we can deduce what h_T^l encodes about subsequent token predictions n steps ahead by adding the generated tokens to the input and comparing the following predictions:

$$y_{T+i} = G(x + [x_{T+1}, ..., x_{T+N}]) \qquad (9)$$
$$\hat{y}_{M+i} = G(c + [x_{T+1}, ..., x_{T+N}] \,||\, h_M^l := h_T^l)$$

The context prompt c could be chosen as any sequence of tokens. In practice, some prompts are more amenable to this intervention than others. In our experiments, we will test a small set of highly generic phrases.

2.4 Learned Prompt Causal Intervention

In the previous section, we have described an intervention that could reveal information predictive of upcoming tokens encoded in a single hidden state, by steering generation when grafted into completely unrelated contexts.

However, in cases where this "fails", it does not necessarily mean that the hidden state does not encode similar information; it may just be less prominent. To evaluate the degree to which such signal is present in these cases, we next explore an approach in which we *learn* to surface information about subsequent tokens from individual contextual token embeddings. This procedure is shown in Figure 3.

Specifically, we optimize a parameterized prefix, $c_{opt} = [c_1, ..., c_M]$ to extract this information from