Emergent Linear Representations in World Models of Self-Supervised Sequence Models

Neel Nanda[*]
Independent

Andrew Lee[*]
University of Michigan

Martin Wattenberg
Harvard University

arXiv:2309.00941v2 [cs.LG] 7 Sep 2023

Abstract

How do sequence models represent their decision-making process? Prior work suggests that Othello-playing neural network learned nonlinear models of the board state (Li et al., 2023a). In this work, we provide evidence of a closely related *linear* representation of the board. In particular, we show that probing for "my colour" vs. "opponent's colour" may be a simple yet powerful way to interpret the model's internal state. This precise understanding of the internal representations allows us to control the model's behaviour with simple vector arithmetic. Linear representations enable significant interpretability progress, which we demonstrate with further exploration of how the world model is computed.[1]

1 Introduction

How do sequence models represent their decision-making process? Large language models are capable of unprecedented feats, yet largely remain inscrutable black boxes. Yet evidence has accumulated that models act as feature extractors: identifying increasingly complex properties of the input and representing these in the internal activations (Geva et al., 2021; Bau et al., 2020; Gurnee et al., 2023; Belinkov, 2022a; Burns et al., 2022; Goh et al., 2021; Elhage et al., 2022a). A key first step for interpreting them is understanding how these features are represented. Mikolov et al. (2013c) introduce the **linear representation hypothesis**: that features are represented linearly as directions in activation space. This would be highly consequential if true, yet this remains controversial and without conclusive empirical justification. In this work, we present novel evidence of linear representations, and show that this hypothesis has real predictive power.

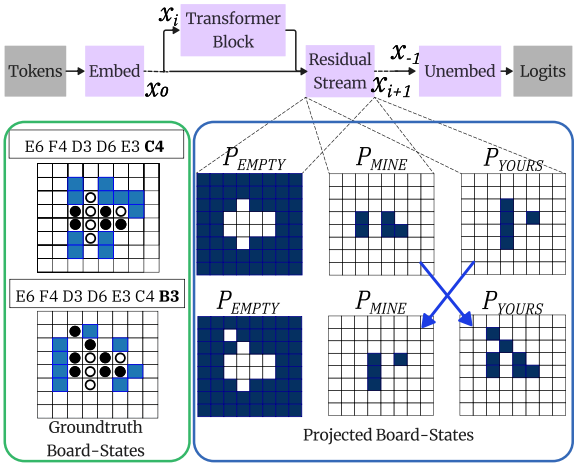

Figure 1: The emergent world models of OthelloGPT are linearly represented. We find that the board states are encoded relative to the current player's colour (MINE vs. YOURS) as opposed to absolute colours (BLACK vs. WHITE).

We build on the work of Li et al. (2023a), who demonstrate the emergence of a *world model* in sequence models. Namely, the authors train OthelloGPT, an autoregressive transformer model, to predict legal moves in a game of Othello given a sequence of prior moves (Section 2.2). They show that the model spontaneously learns to track the correct board state, recovered using *non-linear* probes, despite never being told that the board exists. They further show a causal relationship between the model's inner board state and its move predictions using model edits. Namely, they show that the edited network plays moves that are legal in the edited board state even if illegal in the original board, and even if the edited board state is unreachable by legal play (i.e., out of distribution).

Critically, the original authors claim that OthelloGPT uses *non-linear* representations to encode the board state, by achieving high accuracy with non-linear probes, but failing to do so using linear probes. In our work, we demonstrate that a closely related world model is actually *linearly* encoded.

[*]Equal contribution. neelnanda27@gmail.com, ajyl@umich.edu

[1]Code available at https://github.com/ajyl/mech_int_othelloGPT

Our key insight is that rather than encoding the *colours* of the board (BLACK, WHITE, EMPTY), the sequence model encodes the board *relative* to the current player of each timestep (MINE, YOURS, EMPTY). In other words, for odd timesteps, the model considers BLACK tiles as MINE and WHITE tiles as YOURS, and vice versa for even timesteps (Section 3). Using this insight, we demonstrate that a *linear* projection can be learned with near perfect accuracy to derive the board state.

We further demonstrate that we can steer the sequence model's predictions by simply conducting vectoral arithmetics using our linear vectors (Section 4). Put differently, by pushing the model's activations in the directions of MINE, YOURS, or EMPTY, we can alter the model's belief state of the board, and change its predictions accordingly. Our intervention method is much simpler and interpretable than that of Li et al. (2023a), which rely on gradients to update the model's activations (Section 4.1). Our results confirm that our interpretation of each probe direction is correct, but also demonstrates that a mechanistic understanding of model representations can lead to better control. Our results do not contradict that of Li et al. (2023a), but add to our understanding of emergent world models.

We provide additional interpretations of the sequence model using linear operations. For example, we provide empirical evidence of how the model derives empty tiles of the board, and find additional linear representations, such as tiles being FLIPPED at each timestep.

Finally, we provide a short discussion of our thoughts. How should we think of linear versus non-linear representations? Perhaps most interestingly, why do linear representations emerge?

2 Preliminaries

In this section we briefly describe Othello, OthelloGPT, and our notations.

2.1 Othello

Othello is a two player game played on a 8x8 grid. Players take turns playing black or white discs on the board, and the objective is to have the majority of one's coloured discs by the end of the game.

At each turn, when a tile is played, all of the opponent's discs that are enclosed in a horizontal, vertical, or diagonal row between two discs of the current player are flipped. The game ends when there are no more valid moves for both players.

2.2 OthelloGPT

OthelloGPT is a 8-layer GPT model (Radford et al., 2019), each layer consisting of 8 attention heads and a 512-dimensional hidden space. We use the model weights provided by Li et al. (2023a), denoted there as the synthetic model. The vocabulary space consists of 60 tokens, each one corresponding to a playable move on the board (e.g., A4).[2]

The model is trained in an autoregressive manner, meaning for a given sequence of moves $m_{<t}$, the model must predict the next valid move m_t.

Note that no a priori knowledge of the game nor its rules are provided to the model. Rather, the model is only given move sequences with a training objective to predict next valid moves. Further note that these valid moves are uniformly chosen, and this training objective differs from that of models like AlphaZero (Silver et al., 2018), which are trained to play strategic moves to win games.

2.3 Notations

Transformers. Our transformer architecture (Vaswani et al., 2017) consists of embedding and unembedding layers Emb and $Unemb$ with a series of L transformer layers in-between. Each transformer layer l consists of H multi-head attentions and a multilayer perception (MLP) layer.

A forward pass in the model first embeds the input token at timestep t using embedding layer Emb into a high dimensional space $x_t^0 \in \mathbb{R}^D$. We refer to $x_{t \in T}^0$ as the start of the *residual stream*. Then each attention head $Att_l^h, \forall h \in H$ and MLP block at layer l add to the residual stream:

$$x_t^{l_mid} = x_t^l + \sum_{h \in H} Att_l^h(x_t^l)$$
$$x_t^{l+1} = x_t^{l_mid} + MLP_l(x_t^{l_mid})$$

Each attention head Att_l^h computes value vectors by projecting the residual stream to a lower dimension using $Att_l^h.V$, linearly combines value vectors using $Att_l^h.A$, and projects back to the residual stream using $Att_l^h.O$:

$$h(x) = (Attn_l^h.A \otimes Attn_l^h.O * Attn_l^h.V) * x$$

A final prediction is made by applying $Unemb$ on x^{L-1}, followed by a softmax.

[2]The game always starts with 4 tiles in the center of the board already filled.

	x^0	x^1	x^2	x^3	x^4	x^5	x^6	x^7
Randomized	37	35.1	33.9	35.5	34.8	34.7	34.4	34.5
Probabilistic				61.8				
Linear {BLACK, WHITE, EMPTY}	62.2	74.8	74.9	75.0	75.0	74.9	74.8	74.4
Non-Linear {BLACK, WHITE, EMPTY}	63.4	88.6	93.3	96.3	97.5	98.3	98.7	98.3
Linear {MINE, YOURS, EMPTY}	**90.9**	**94.8**	**97.2**	**98.3**	**99**	**99.4**	**99.6**	**99.5**

Table 1: Probing accuracy for board states. OthelloGPT linearly encodes the board state relative to the current player at each timestep (MINE vs. YOURS, as opposed to colours BLACK or WHITE.

Probe Models. We notate linear and non-linear probes as p^λ and p^ν. Our linear probes are simple linear projections from the residual stream: $p^\lambda(x_t^l) = \text{softmax}(Wx_t^l), W \in \mathbb{R}^{D\times 3}$. The dimension $D \times 3$ comes from doing a 3-way classification.[3] Non-linear probes are 2-layer MLP models: $p^\nu(x_t^l) = \text{softmax}(W_1\text{ReLU}(W_2x_t^l))$, $W_1 \in \mathbb{R}^{H\times 3}, W_2 \in \mathbb{R}^{D\times H}$. Li et al. (2023a) classify the colour at each tile (BLACK, WHITE, EMPTY). Our insight is to classify the colours *relative* to the current turn's player (MINE, YOURS, EMPTY).

3 Linearly Encoded Board States

In this section we describe our experiments to find linear board state representations.

3.1 Experiment Setup

Rather than encoding the colour of each tile (BLACK, WHITE, EMPTY), OthelloGPT encodes each tile *relative* to the player of each timestep (MINE, YOURS, EMPTY) — for *odd* timesteps, we consider BLACK to be MINE and WHITE to be YOURS, and vice versa for *even* timesteps.

In order to learn the weights of our linear probe, we train on 3,500,000 game sequences. We use a validation set of 512 games, and train until our validation loss converges according to a patience value of 10. In practice, our linear probes converge after around 100,000 training samples. We test our probes on a held out set of 1,000 games.

We train a different probe for each layer l. Hyperparameters are provided in the Appendix.

3.2 Results

Table 1 shows the accuracy for various probes.

We include four baselines. The first is a linear probe trained on a randomly initialized GPT model. We also include a probabilistic baseline, in which we always choose the most likely colour per tile at each timestep, according to a set of 60,000 games from training data. The next two baselines are probe models used in Li et al. (2023a): a linear and non-linear probe trained to classify amongst {BLACK, WHITE, EMPTY}.

Our linear probes achieve high accuracy by layer 4. Unbeknownst previously, we show that the emerged board state is linearly encoded.

[3] In practice, because we are predicting the state of all 64 tiles, the shape of our probe is $D \times 64 \times 3$.

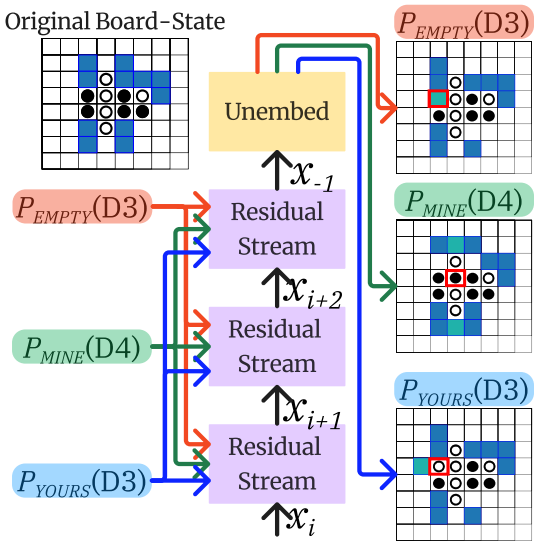

Figure 2: Intervening methodology: we intervene by adding either EMPTY, MINE, or YOURS directions into each layer of the residual stream. Red squares in each board indicate the tiles that have been intervened, teal tiles indicate new legal moves post-intervention that the model predicts.

4 Intervening with Linear Directions

In this section we demonstrate how we intervene on OthelloGPT's board state using linear probes.

4.1 Method

An inherent issue with probing is that it is correlational, not causal (Belinkov, 2022b). To validate that our probes have found a true world model, we confirm that the model uses the encoded board state