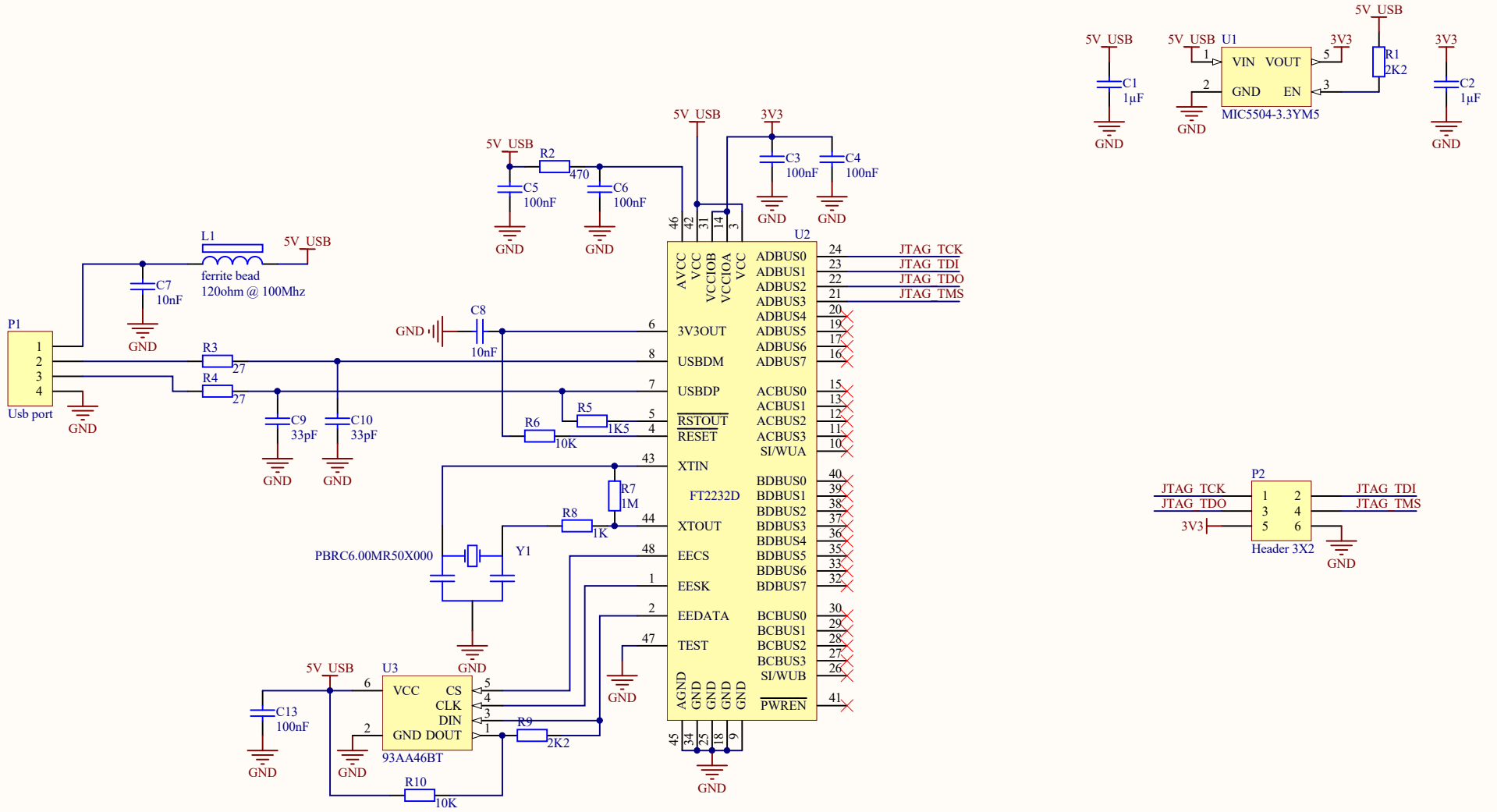

Title USB2JTAG		
Size A4	Number	Revision V1.0
Date: 19/02/2017		Sheet of
File: F:\Robotique\..\USB2JTAG.SchDoc		Drawn By: PIERRICK B.