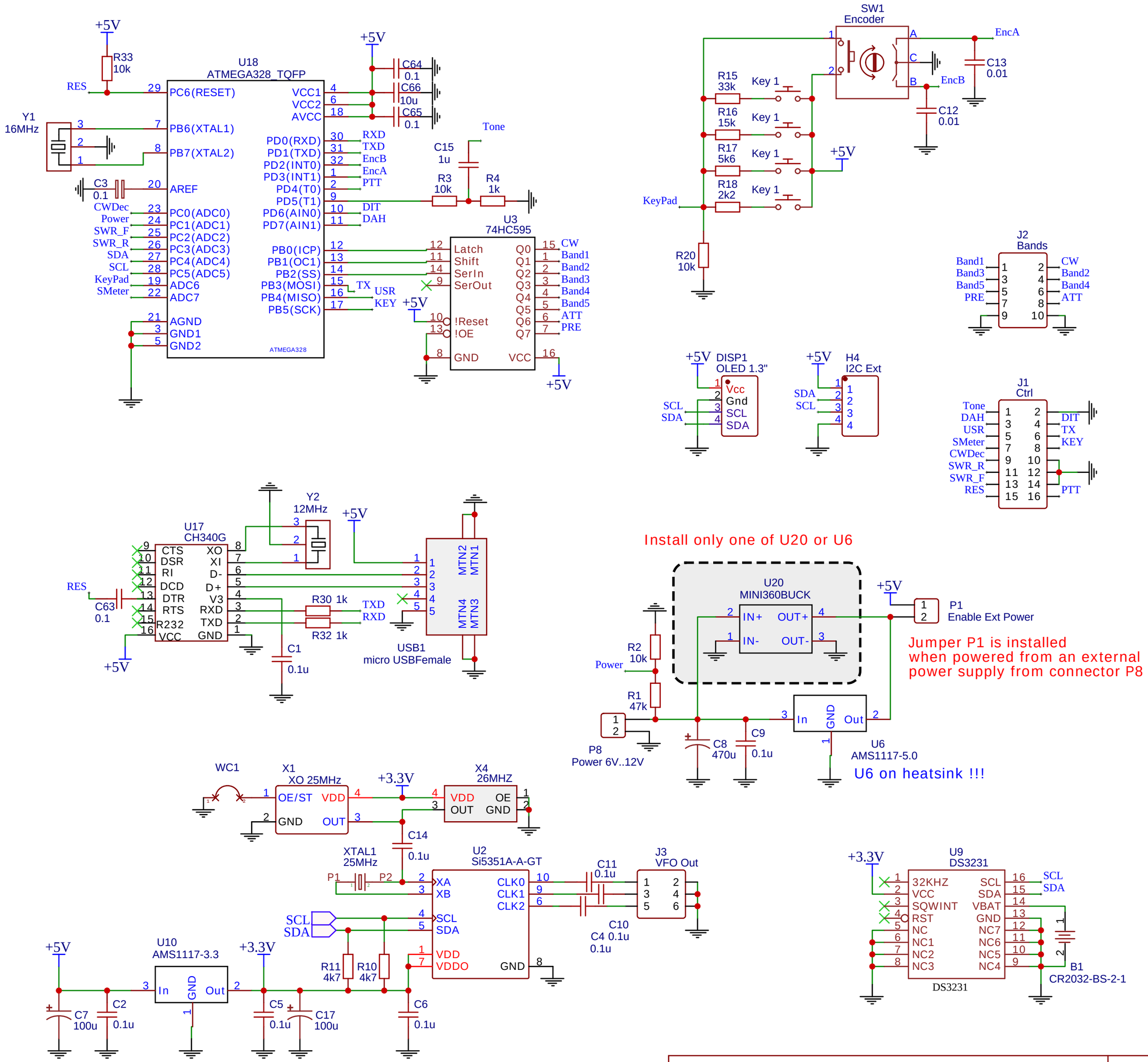

TITLE: Nano VFO 3	REV: 3.1
Company: www.ur5ffr.com	Sheet: 1/1
Date: 2 jan 2021 Drawn By: Andrey Belokon	