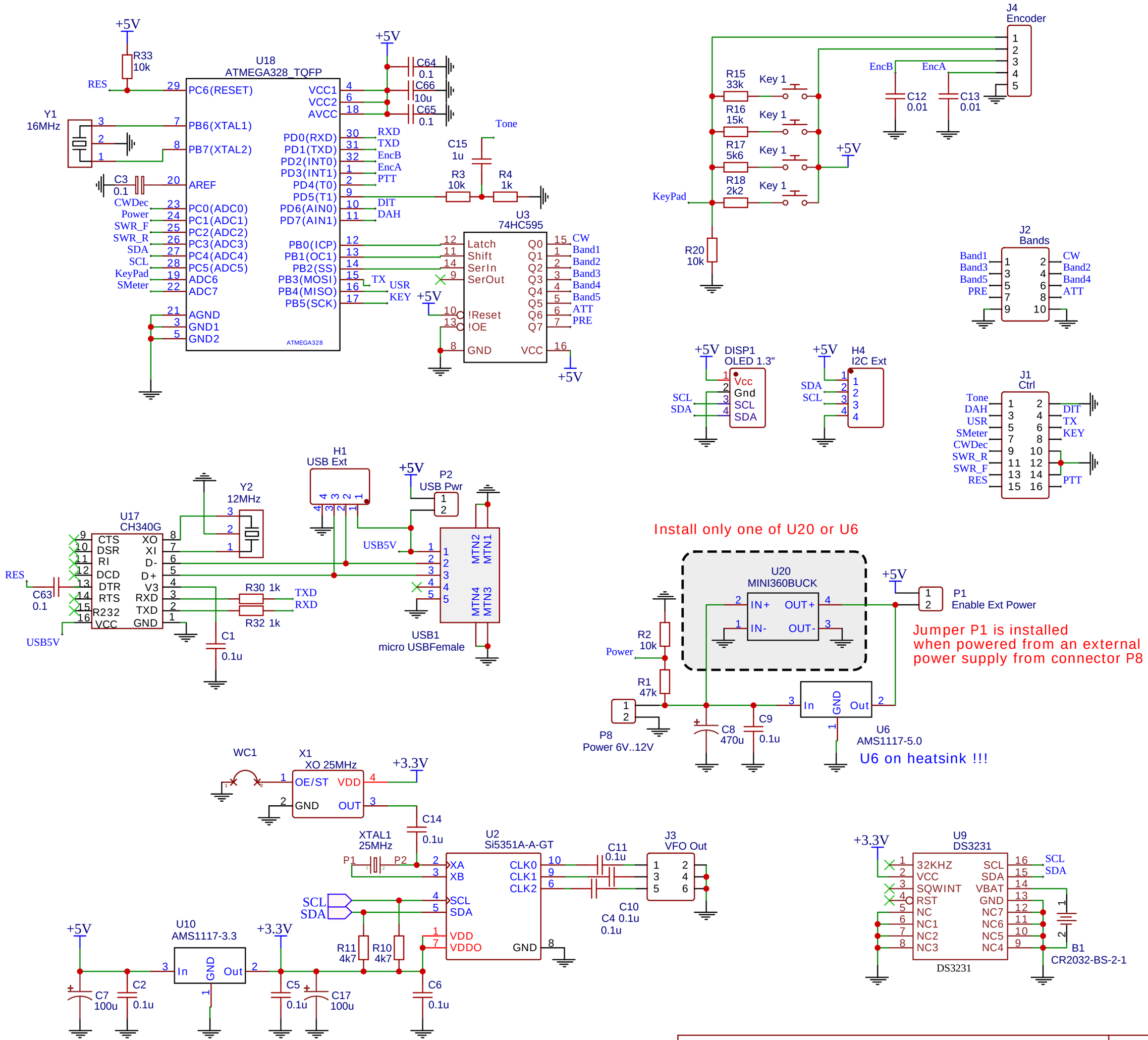

TITLE: Nano VFO 3

REV: 3.2

Company: www.ur5ffr.com

Sheet: 1/1

Date: 24 Nov 2021 Drawn By: Andrey Belokon