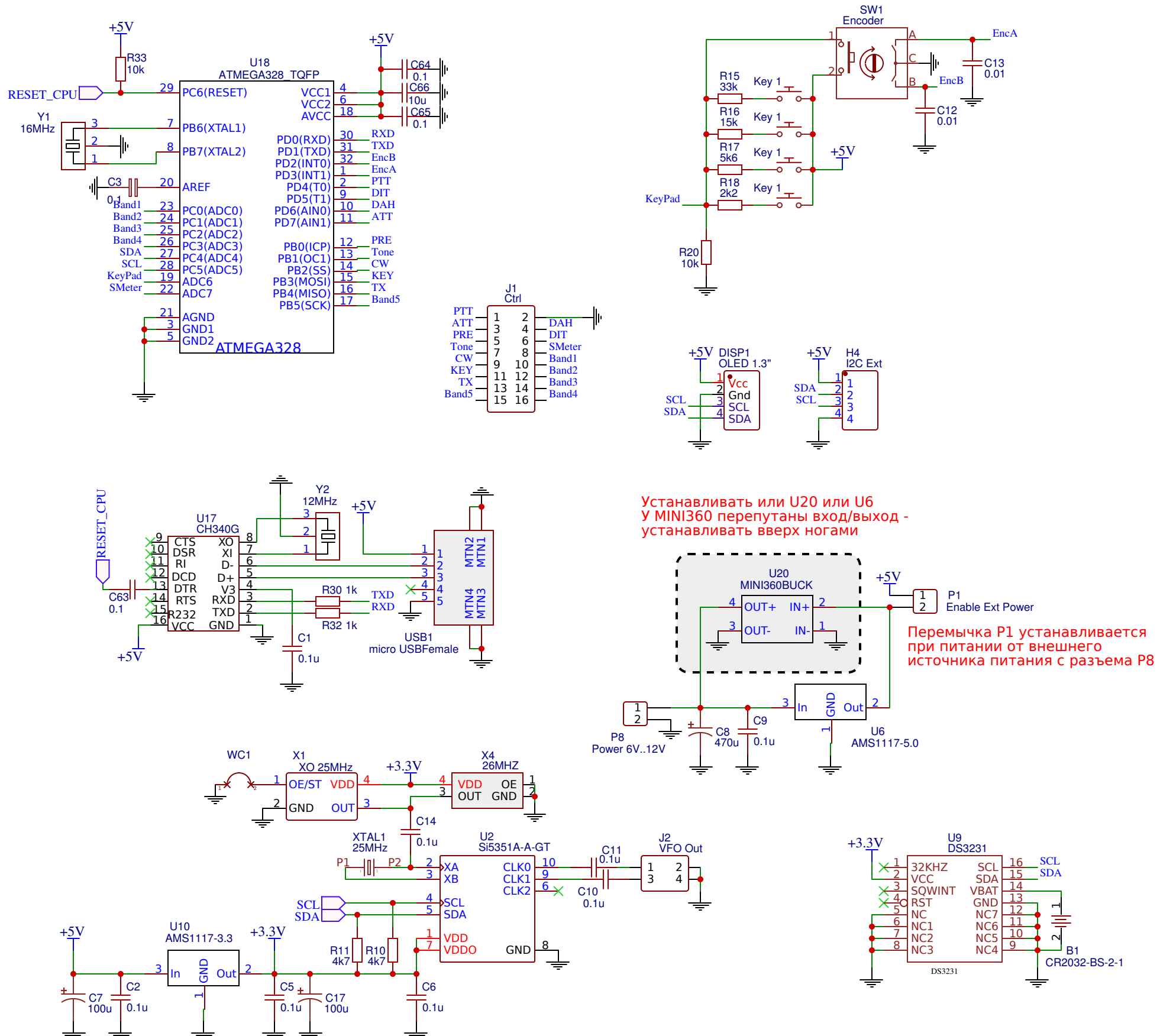

TITLE: Nano VFO 3 OLED	REV: 1.0
Company: www.dspview.com	Sheet: 1/1
Date: 20 oct 2020 Drawn By: UR5FFR	

EasyEDA