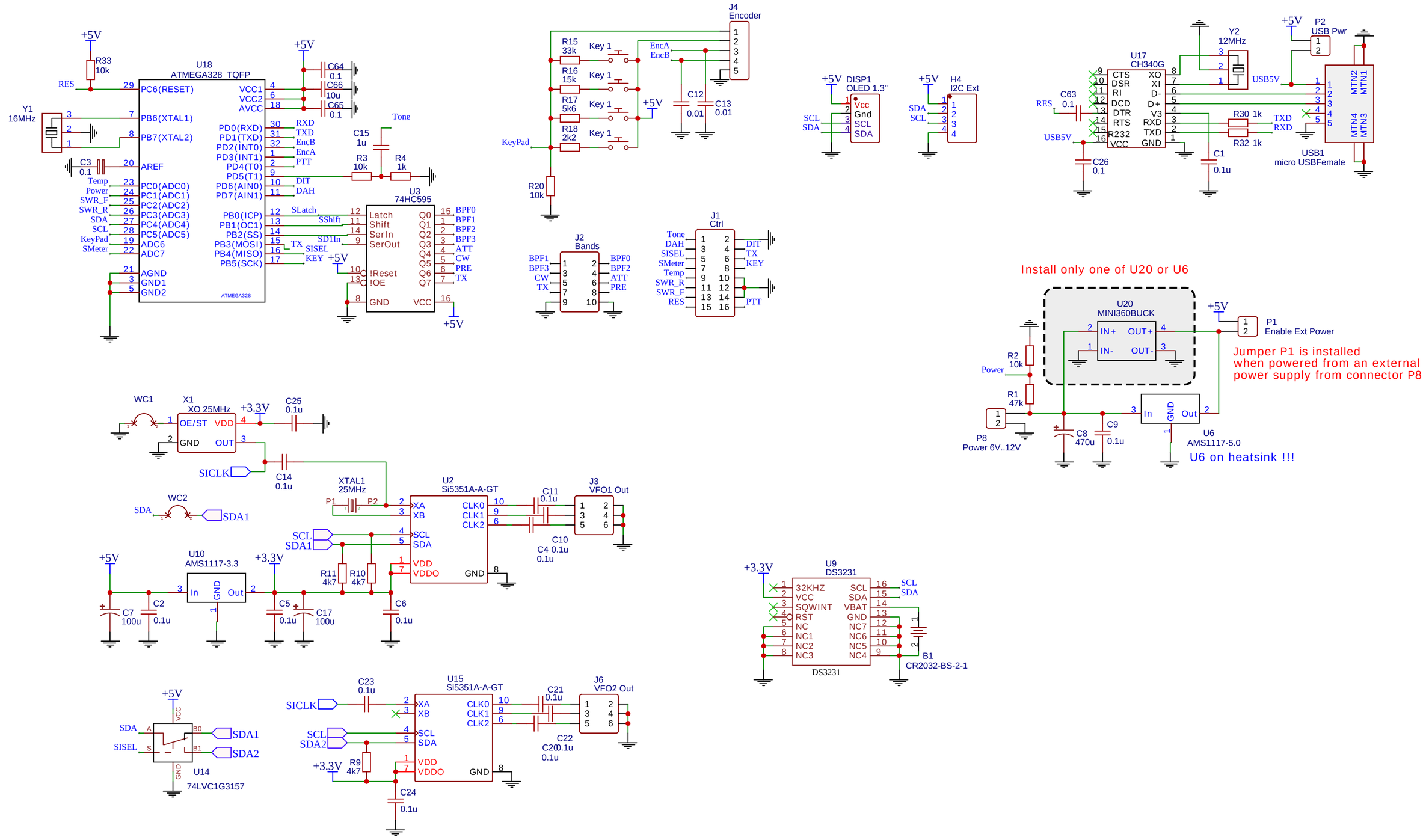

TITLE: Nano VFO 3 SuperLED	REV: 1.0
Company: www.ur5ffr.com	Sheet: 1/2
Date: 5 jul 2023 Drawn By: Andrey Belokon	

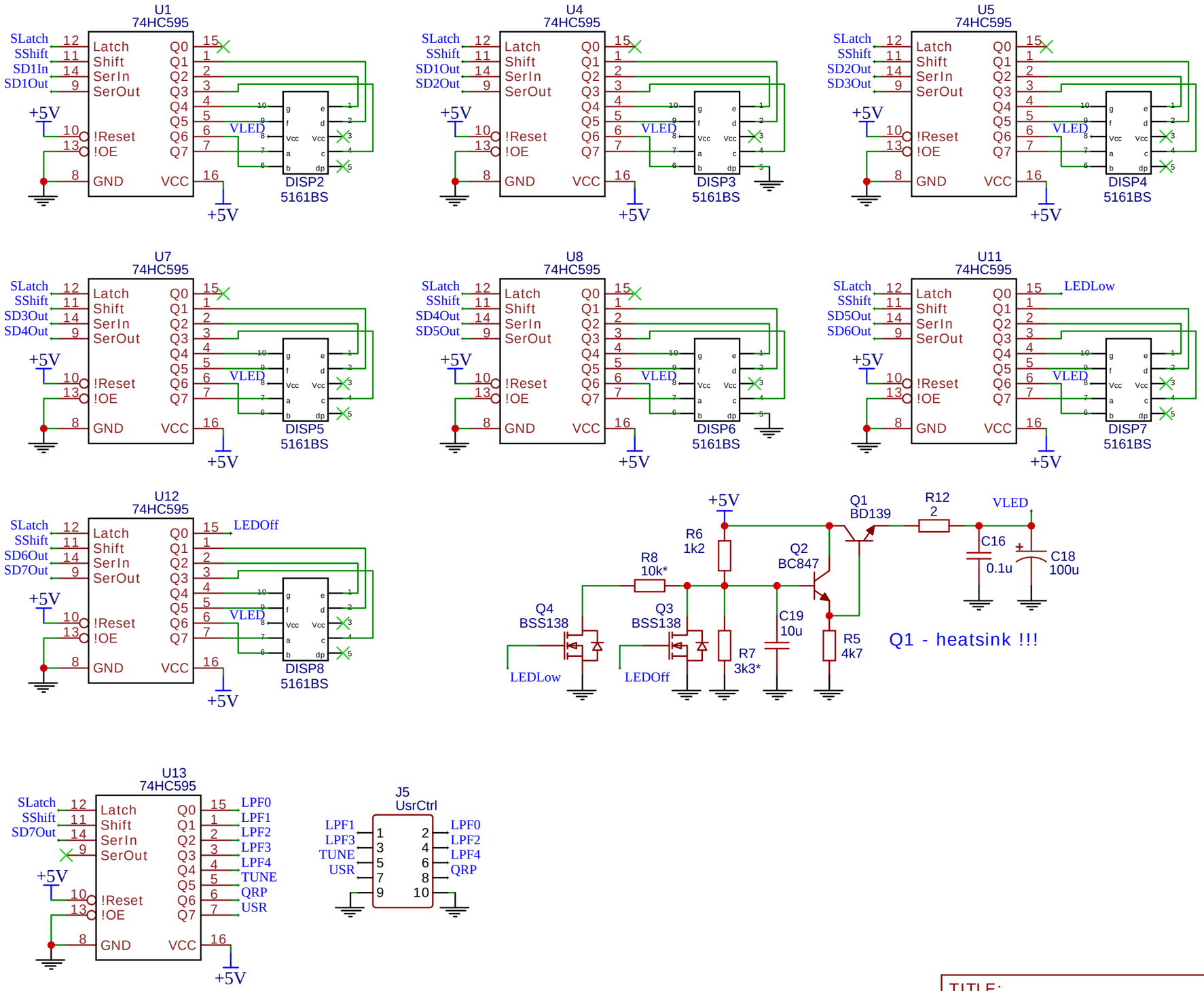

TITLE: Nano VFO 3 SuperLED	REV: 1.0
Company: www.ur5ffr.com	Sheet: 2/2
Date: 5 jul 2023 Drawn By: Andrey Belokon	